Schroeder INDUSTRIES

Advanced Fluid Conditioning Solutions®

PROUDLY MANUFACTURED IN THE UNITED STATES

PROCESS FILTRATION

Product Line Overview

Easy-to-Control Systems

Increased Process Reliability

Reduced Operating Costs

Lower Maintenance Efforts & Costs

Quality Policy

Continuous improvement in our business to ensure a quality product, shipped on time, without compromise.

Leetsdale Facility

Limitations of Liability

The information contained in the catalog (including, but not limited to, specifications, configurations, drawings, photographs, dimensions and packaging) is for descriptive purposes only. Any description of the products contained in this catalog is for the sole purpose of identifying the products and shall not be deemed a warranty that the products shall conform to such description. No representation or warranty is made concerning the information contained in this catalog as to the accuracy or completeness of such information. Schroeder Industries LLC reserves the right to make changes to the products included in this catalog without notice. A copy of our warranty terms and other conditions of sale are available upon request. A placed order constitutes acceptance of Schroeder's terms and conditions.

Failure, improper selection or improper use of the products and/or systems described herein or related items can cause death, personal injury and property damage.

This catalog and other documentation from Schroeder Industries provides product information for consideration by users possessing technical expertise.

It is important that the user analyze all aspects of the specific application and review the current product information in the current catalog. Due to the variety of operating conditions and applications for these products, the user is solely responsible for making the final product selection and assuring that all performance, safety and warning requirements of the application are met.

The products described herein, including without limitation, product features, specifications, design, availability and pricing are subject to change at any time without notice.

Schroeder
INDUSTRIES
Advanced Fluid Conditioning Solutions®

Schroeder Process Filtration Table of Contents

	Pressure psi (bar)	Flow gpm (L/min)	Page
Corporate Overview			4
Introduction to Process Filtration Technology			5
Industries Served			6
Filter Selection			7
Element Selection Guide			8
Automatic Backflushing Filters			10
Backflushing Filters			11
RF3-C — RF3-8: Backflushing Filter AutoFilt® RF3	150 (10)	20-120 (80-470)	14
RF5: Backflushing Filter AutoFilt® RF5	87 (6)	748-18,480 (170-4200)	18
RF7: Backflushing Filter AutoFilt® RF	87 (6)	83-33,022 (22-12,501)	20
RF10: Backflushing Filter AutoFilt® RF10	87 (6)	2210-12,940 (580-3420)	22
RF4-1: Backflushing Filter AutoFilt® RF4	87 (6)	35 (120)	28
RF4-2: Backflushing Filter AutoFilt® RF4	87 (6)	60 (220)	32
RF12: Backflushing Filter AutoFilt® RF12	145 (10)	21 (80)	34
RF14: Backflushing Filter AutoFilt® RF14	88 (6)	15,400 (58,295)	36
BTU: Backflush Treatment Unit	150 (10)	32-1120 (120-4235)	40
ATF-1: Automatic Twist Flow Strainer ATF	230 (16)	35 (132)	44
ATF-2, 2.5, 3: Automatic Twist Flow Strainer ATF	230 (16)	480 (1816)	48
ATF-3.5, 4: Automatic Twist Flow Strainer ATF	230 (16)	1760 (6662)	50
PLF1: Process Inline Filter PLF	145/230 (10/16)	881 (4005)	52
PLF2: Process Inline Filter PLF	145/230 (10/16)	881 (4005)	54
PVD: Clogging Indicators for Process Filters	0-6174 (0-420)	-	56
Bag Housings and Elements			61
BH1: Single Bag Housings - 100 psi	100 (7)	200 (757)	64
BH1: Single Bag Housings - 150 psi	150 (10)	200 (757)	65
BH1-BH14: Multi Bag Housings	150 (10)	296-1981 (1200-7500)	67
DBH1-DBH10: Duplex Multi Bag Housings	150 (10)	792-3962 (3000-15,000)	69
Bag Element Operating Guidelines			71
Micron-Rated Bag Elements	-	-	73
PEPT: Polyester Phenolic Treatment Liquid Bag			74
OAB: Oil Absorbing Bag Elements	-	-	76
High Efficiency Bag Elements	-	-	77
PPH: High Efficiency Bag Elements	-	-	78
PPA: Absolute Rated Bag Elements	-	-	78
BR: Bag Type High Flow Filter Cartridges	-	-	79
Cartridge Housings and Elements			83
SW: Series Precision Wound Filter Cartridges	60 (2)	-	85
DCE: Economical Meltblown Elements/Crar	-	-	87
ACE: Cartridge Housings and Elements	35 (2.4)	-	87
PP: High Purity Pleated Polypropylene Cartridges	-	-	89
CH1: Cartridge Housings and Elements	125 (9)	1-5 (3.6-18.33)	91
CH3-CH7: Cartridge Housings and Elements	100/150 (7/10)	0-123 (0-467)	93
CH3-CH12: Cartridge Housings and Elements	150 (10)	5-40 (18.33-150)	95
CH13-CH173: Cartridge Housings and Elements			97
Media Filter: RMF: Rolling Media Filtration	-	70/600 (268-2270)	100
Oil and Gas Products: PPS: Oil and Gas Products	-	-	103
Mining Products			107
LW60: Longwall Filter	6000 (400)	300 (1135)	110
Mining Specific Elements	-	-	112
Glossary			119
Process Filtration Worksheet			120

Corporate Overview

Schroeder INDUSTRIES
Advanced Fluid Conditioning Solutions®

Schroeder Industries, an ISO 9001:2015 certified company, focuses on developing filtration and fluid service products for our customers in the fluid power industry, and is proud of our proven track record of providing quality products over the last sixty five years. The designs you see in this catalog are the result of thousands of hours of field testing and laboratory research and decades of experience.

Schroeder was one of the first companies to demonstrate the need for, and benefits of, hydraulic filtration. We pioneered the development of micronic filtration, helping to set performance standards in industrial fluid power systems. As a result, Schroeder is now a leader in filtration and fluid conditioning and the proof of our expertise lies in our broad mix of unsurpassed products. Our mission statement reflects our continuing commitment to excellence:

Partnerships

Innovating products, solutions, processes and services to improve performance and efficiency in industry.

We design solutions for industry and for the success of our customers by:

- Optimizing the use of technology with applications
- Using an efficient, timely customized process to fill specific customer needs
- Increasing manufacturing capacity and streamlining operations
- Preserving our reputation for reliability
- Expanding globally to support our customers and stay current with new technologies
- Leveraging and sharing our knowledge to meet challenges openly
- Nurturing a creative, cooperative culture committed to the individual and to providing the best solutions for our customers

Our goal is to be your partner in filtration. Our expertise in filtration technology, superior filter and element technology capabilities and a level of dedication to customer service and product support are the reasons we're a worldwide leader in Advanced Fluid Conditioning Solutions.™

Committed to providing the best available filter products, Schroeder Industries will show how we meet all of the necessary cleanliness levels at a competitive price. As a cost-effective quality producer, we will work with your purchasing department to supply filtration technology and develop long-range pricing programs that can improve your company's bottom line.

Introduction to Process Filtration Technology

The keystone product of Schroeder Process Filtration is the RF3 automatic self-cleaning backflush filter. This filter along with bag filters, cartridge filters and custom designed systems allows Schroeder to offer you complete solutions to your process filtration needs.

Our process filters are used to remove solid contamination from fluids and protect the integrity of high grade components that depend on low viscosity water or water-based fluids and emulsions. Schroeder offers high performance filters for all municipal and industrial sectors. Improvements in operational efficiency, reduced downtime, lower maintenance costs and reduced environmental impact can all be expected.

Schroeder's backflush filters come in many sizes to fit a wide range of applications. From pressures of 150 psi to 5,000 psi and flows from 20 gpm to 33,000 gpm, there is a backflush solution for many processes. Backflush filters are either automatic or manually operated. Many are made from stainless steel, but they are also available in carbon steel, with protective coating or from brass. Backflush filters are generally used more for coarse filtration.

Fine filtration can be achieved in many ways. Schroeder offers bag filters and cartridge filters to filter fluids as low as 0.2 micron. Bag, cartridge and rolling media filters offer an economical filtration solution. The elements are disposable and easily changed.

The most important aspects of filter selection include performance, efficiency, system parameters and of course, economic impact. Choosing the proper filter for your specific need is not difficult, but certainly requires some attention and understanding of specific parameters. This catalog was designed to help you find the right filter to meet your needs.

Industries Served

Agriculture

Irrigation is critical to the success of the agriculture industry. Filtering irrigation water will extend the life of pumps, pipes, nozzles and headers.

Automotive Manufacturing

Better filtration of cutting fluid water emulsions to extend service life and reduce environmental impact. Treatment of the cooling water allows for a cleaner, less abrasive supply.

Chemical Processing

Improving the product quality by filtration of process fluids.

Industrial

Continuous filtration of cooling water, cutting fluids and other service liquids within the plant increases component reliability and reduced downtime due to service interventions.

Machine Tool

Improving the condition of emulsified cutting fluids to extend service life and reduce environmental impact.

Marine

Filtration of inlet water used for cooling various components, fire suppression, bilges, ballast and raw stock for potable water generators.

Mining Technology

Underground spray water filtration for process consistency and improved reliability of pumps and cutting heads. Treatment of water hydraulics in long-wall applications to increase component life and reduce environmental impact.

Offshore

Filtration of inlet water used for cooling various components, fire suppression, bilges and raw stock for potable water generators.

Paper Industry

Protecting screen spray nozzles and dynamic shaft seals through efficient filtration to increase efficiency and extend service life.

Power Generation

Treatment of inlet cooling water supply for the generators allows for a cleaner, less abrasive supply. Filtration of the water supply to the dynamic “sliding-ring” water seal on the turbine shaft increases service life of the seal.

Sewage Water and Waste Water Treatment

Coarse and fine filtration of the water supply and pre-treatment of effluent. In industrial situations, take-off filtration of the clear run water saves valuable potable resources and provides excellent protection of costly membrane systems.

Steel Making

Treatment of inlet cooling water supply used for various processes, including rolling mills and furnaces. Nozzles and pumps in descaling operations are protected by thorough filtration of the water.

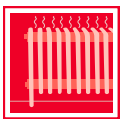

Thermal Transfer

Protection of heat exchangers and radiant devices from becoming clogged with solid contaminants in the transfer fluid.

Filter Selection

Filter Housing Selection

When considering a Schroeder Process Filter for your application, you can select from three basic designs:

1. Backflush Filters (automatic and manual) – Backflushing filters cover a wide range of flows and filtration ratings. Some are automatic using electronics and pneumatics controlled by a PLC-based panel. Others require an operator to manually back-flush the filter. The elements in each of the backflush filters are reusable.
2. Bag Filter Systems – These filter housings come standard sizes 1, 2, 3 and 4. Size 2 multi-bag housings are available for higher flow applications. The filter bags are disposable and available in many types of felt and mesh. They are suitable for coarse and fine filtration.
3. Cartridge Filter Systems – Cartridge elements utilize depth filtration to increase dirt holding capacity while offering efficient filtration. The elements are well suited for fine filtration. Housings for these elements are available in polypropylene for single cartridges and stainless steel for multiple cartridges.

There are eight (8) main considerations in choosing the proper filter housing:

1. Fluid Compatibility – How will the materials of construction and seals for both the housing and element withstand the process medium?

   Materials of Construction

   a. Housing Construction – Carbon steel, stainless steel, polypropylene, brass and more.

   b. Seals – Buna, EPDM, Viton, Teflon® (a registered trademark of DuPont Dow Elastomers) and more.

   c. Filter Elements – Please see Element Selection Guide and Technical Data Section (page 6) for more detailed information.
2. Pressure Rating – The maximum sustainable working pressure of the system.
3. Pressure Drop (loss) – How important is maintaining pressure rating and heat generation in the system?
4. Process Connection Size – The process piping and specific requirements of the system determine these criteria.
5. Filter Element Options – What is the desired pore size of the element and the requirements of the system (please see Filter Element Selection)?
6. Overall Efficiency – Based on filter element selection.
7. Accessories – Gauges, system monitoring, control panels.
8. Economic Considerations

The model numbering selection chart on each product spread will provide an easy method to fully define the product you need for your specific application.

The information provided in this section is for reference only, and should be used as a guide when selecting the proper filters, elements, materials of construction and determining fluid compatibility. For your specific application, contact Schroeder Industries at www.schroederindustries.com, by phone at 724.318.1100 or fax at 724.318.1200.

Element Selection Guide

Coarsest

3000 - 10,000 µm

Reusable

Perforated Plate

These are standard round-rolled perforated plates, which are welded together at the length side, in contrast to the inline filter elements. The solids remain in the screen basket and can be easily removed. The flow direction is from the inside towards the outside.

50 - 3000 µm

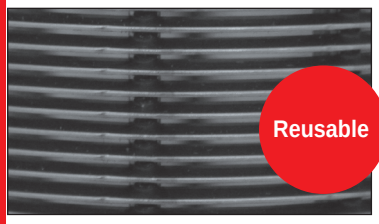

Reusable

Slotted Tube

Slotted tubes consist of a spiral profile wire, which is welded with vertical support wires. They can be used for inline or screen baskets, and the flow direction can be either.

100 - 250 µm

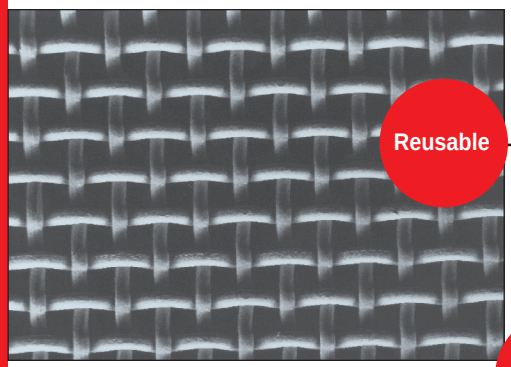

Reusable

Square Hole Wire Mesh

This fiber consists of chain wire that is sized according to the support wire. Pore size is determined by the rectangular construction.

Reusable

SuperMesh™

A combination of square hole wire mesh and dutch weave wire mesh.

25 - 60 µm

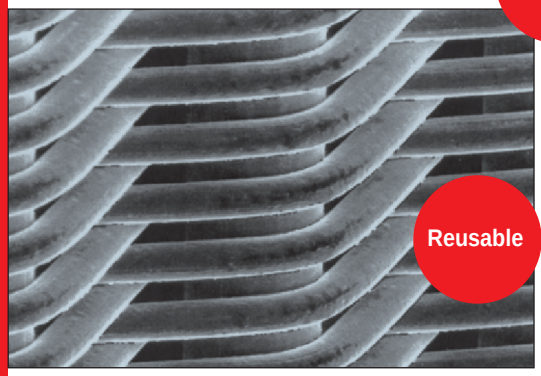

Reusable

Dutch Weave Wire Mesh

This mesh consists of chain wire woven with wire of different diameters. This element design has a higher mechanical stability than the square hole mesh.

1 - 100 µm

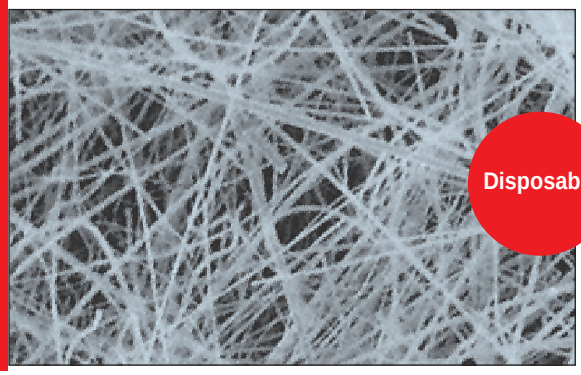

Disposable

Bag and Cartridge Filters

These filters are made from polypropylene, polyester or nylon. They offer high efficiency, high dirt holding capacity and low purchase cost for fine filtration.

Finest

Element Selection Guide

Filter Element Selection

The fundamentals of filter element selection will focus upon the type of fluid you are filtering and what filtration level you require.

In some cases, basic filtration is required when coarse materials in the fluid are to be removed. In other instances, extremely fine filtration may be needed for the specific process or equipment within the system.

There are two classes of filter elements:

1. Reusable
2. Disposable

Once again, we set the standard for environmental stewardship with reusable filter elements. When choosing the proper filter element, you now have a choice not only based on filtration requirements, but on the materials of construction and the possibility of environmental impact. As you begin the selection process for filters and filter elements, you will be able to add to your criteria whether a disposable or reusable element suits your application best. Consideration should be given to all of the environmental consequences, and we urge you to contact our application engineers during the selection process.

Reusable Elements

Designed to allow the user to replenish the media through cleaning, these elements utilize metallic media for long-term usage. Reusable elements are easily cleaned. In some cases, “intelligence” is built into the filter housing and through an internal process, the filter performs the cleaning process itself. This feature is the benchmark of the RF3 backflushing products.

Disposable Elements

Our disposable bag and cartridge elements are manufactured from polypropylene, polyester, nylon and other low cost durable materials. They are engineered to offer high dirt holding capacity and high efficiency at an economical price. These elements are reliable and are used for fine filtration.

The graphical representation on the previous page demonstrates five differing element types and their corresponding micronic range. This is critical to selecting the level of cleaning required in your system. It is important to select the medium that is appropriate to your application. There are dangers in both undersizing and oversizing of the element. Selecting a pore size too large can have adverse effects on your process or the equipment you are trying to protect. Selecting a pore size smaller than your requirements will add unnecessary protection and introduce pressure drop and heat that may affect your process. If you are unsure of your specific requirements, please contact our application engineers for assistance. The filter model number selection chart on each product spread will provide an easy method to fully define the product you need for your specific application.

Notes Section:

Section 1: BACKFLUSHING FILTERS

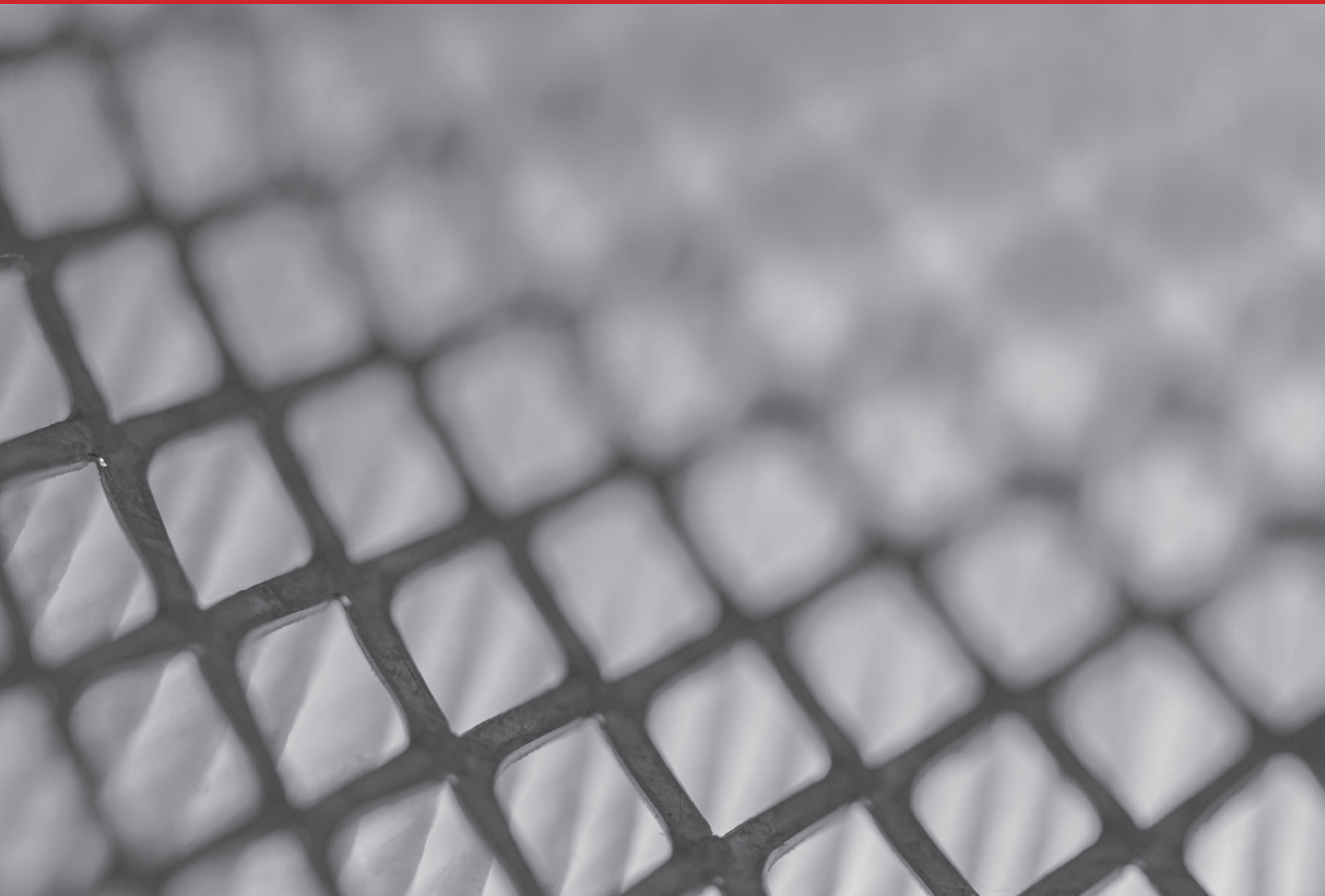

Automatic Backflushing Filters

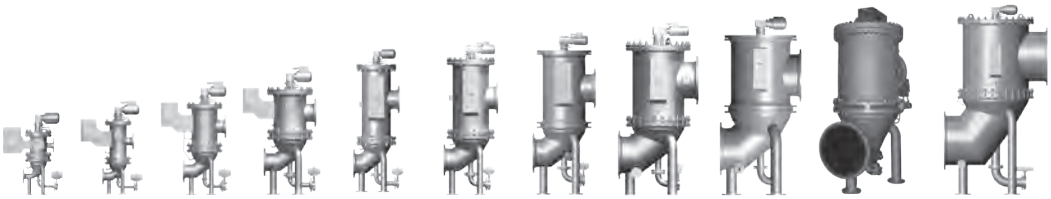

RF3-C RF3-0 RF3-1 RF3-2 RF3-2.5 RF3-3 RF3-4 RF3-5 RF3-6 RF3-7 RF3-8

The RF3 Automatic Backflushing Filters are complete filtration systems. These unique products are not only performing the task of filtering low viscosity liquids, but also the cleaning of their array of reusable conical filter elements via PLC controlled mechanism.

Since particles in process fluids have an influence on the quality of the end product and they increase the attrition rate of system components, proper protection through efficient filtration is needed. The RF3 self-cleaning filters provide this protection with uninterrupted operation.

The RF3 automatic self-cleaning filters are used for extracting particulate contaminants. The rugged design and automatic self-cleaning capability give this filter product the ability to make a major contribution to operational reliability, reduction of maintenance costs and overall efficiency in many process systems.

The RF3 filters have a special housing design that incorporates an array of filter elements. The special Slotted Tube and SuperMesh™ elements with pore sizes from 25 to 3000 micron ensure highly effective removal of particulate contamination from the process medium. The adjustable differential pressure switch triggers the self-cleaning function. Each individual filter element is cleaned with filtrate in the reverse flow direction while being totally isolated from the rest of the element array. This is how the RF3 can continue to filter without any interruption of the filtration process during the backflush cycle.

The RF3 filters are a relatively simple mechanical design as illustrated here. Pre-filtered liquid enters the inlet port and exits through the outlet port after passing through the conical element array. The flow direction of the elements is from inside out, and particles are collected on the smooth interior surfaces for easy cleaning. As the level of contamination increases, so does the differential pressure across the filter.

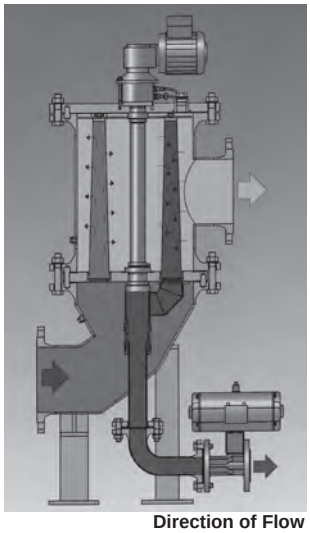

Direction of Flow

When does the self-cleaning function occur?

As the amount of contamination collected in the elements increases, so does the differential pressure. When the differential pressure reaches the set point, a signal is sent to the PLC inside the control panel, which initiates the backflush cycle. The cleaning cycle can also be started by the adjustable timer located inside the control panel, or by simply pressing the cycle start button located on the front of the control panel.

How does the self-cleaning system operate?

The process starts with the geared motor located on top of the filter positioning the backflush arm beneath the first element to be cleaned. Once in position, the control panel opens the backflush valve, which creates a pressure gradient that reverses the flow of filtrate through this single element. The reverse flow cleans the element of the collected particles. The valve then closes and the motor positions the arm beneath the next element to be cleaned. The backflush cycle is complete when all of the elements in the array have been cleaned.

What about the filter elements?

The conical shaped filter elements used in the RF3 self-cleaning filters are specially designed for isokinetic filtering and backflushing. This tapered design results in an even flow distribution, low pressure drop and a uniform distribution of contaminate inside the elements. The advantages: longer time between backflush cycles, less loss of process fluid and more complete and efficient cleaning of the conical wedge wire elements.

Filtration Mode

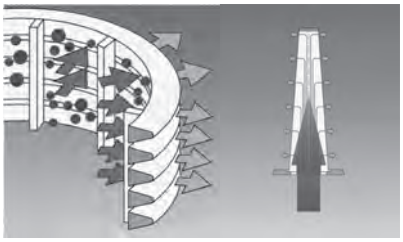

Are there any other unique features?

The PLC control has some benefits that aren't immediately visible. During the self-cleaning operation, the backflush valve is in position under the element being cleaned for just a few seconds. The backflush valve is opened and closed rapidly, causing a "pulsation" of filtrate through the filter element openings. These pressure surges produce a superior cleaning effect in a shorter time. The result is fewer cleaning cycles, shorter duration and lower consumption of filtrate.

Backflush Mode

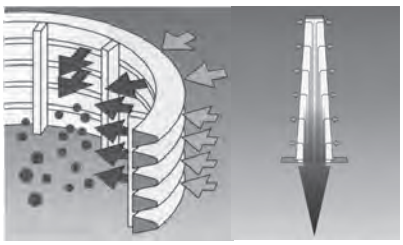

Automatic Backflushing Filters

Some of the RF3 Benefits:

- Excellent price to performance ratio
- High filtration quality
- Low occurrence of service staff intervention
- Low operating cost
- Low maintenance cost
- Continuous operation of process
- High flow rate for maximum performance
- Low pressure drop
- Low energy consumption
- Superior self-cleaning functionality
- Application specific design
- Efficient design / small footprint envelope
- Simple installation
- Maximum use of filtration surfaces for best efficiency

Filter Elements

- Patented element design
- 25 to 3000 micron filtration

Installation Guidelines

- Minimum inlet pressure of 35 psi
- Maximum 2 psi clean pressure differential between inlet and outlet
- Minimum 25 psi between the outlet and the backflush line (preferably the backflush line goes to atmospheric pressure)

System Installation Diagram

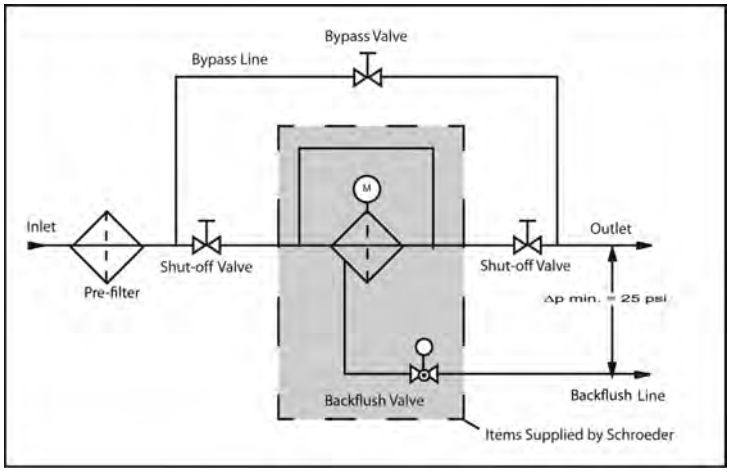

Industries Served

STEEL MAKING | PULP & PAPER | WASTE WATER TREATMENT | MINING TECHNOLOGY | INDUSTRIAL | POWER GENERATION | MARINE | MACHINE TOOL

Specifications

2.1. STANDARD CONFIGURATIONS		• ASME Code Design (with or without U-Stamp)
2.1.1 Control Parameters	**2.1.9 Internal Corrosion Protection**	**2.2.3 Flange Connections**
• EPT: electro-pneumatic cyclic control	• 2K epoxy paint	• ANSI
• EU: electrical circulation control (electric only)	• 2K polyurethane coating	• JIS
• PT: pneumatic cyclic control with timer function (pneumatic only)	• rubber lined	**2.2.4 Housing Materials**
2.1.2 Connection Voltages	**2.1.10 Differential Pressure Gauge**	• Duplex
• 3 x 400V / 50 Hz with or without neutral wire	• Aluminum	• Superduplex
• 3 x 500V / 50 Hz without neutral wire	• Stainless steel	• Various qualities of stainless steel
• 3 x 230V / 50 Hz with or without neutral wire	• Brass	**2.2.5 Cover Plate Lifting Device**
• 3 x 415V / 50 Hz without neutral wire	• Chemical seal	• Carbon steel
• 3 x 415V / 60 Hz with neutral wire	**2.1.11 Filtration Ratings**	• Stainless Steel
• 3 x 460V / 60 Hz without neutral wire	• 25 µm, 40 µm and 60 µm Super Mesh	• Cover plate lifting device for retrofitting
• 3 x 440V / 60 Hz without neutral wire	• 50 µm to 3000 µm slotted tube	**2.2.6 Material of Internal Parts and Elements**
• 3 x 525V / 50 Hz without neutral wire	**2.1.12 Electrical Protection Class**	• Duplex
• 3 x 575V / 60 Hz without neutral wire	• IP55	• Superduplex
• 3 x 690V / 50 Hz without neutral wire	**2.1.13 Pressure Ranges**	• Various qualities of stainless steel
• 1 x 230V / 50 Hz	• 6 bar	• Elements with magnetic filtration technology
• 1 x 230V / 60 Hz	• 10 bar	• Superflush element technology
• 1 x 115 • / 60 Hz	• 16 bar	**2.2.7 External Corrosion Protection**
2.1.3 Housing Calculation / Flange Connections	• 25 bar	• Multiple layer coatings
• AD 2000 / PED 97/23/EC Pressure Equipment Directive	• 40 bar	• Special paints / coatings for offshore use
• DIN flanges	• 64 bar (on request)	• Colors to customer specification
2.1.4 Variable Flange Geometry	• 100 bar (on request)	**2.2.8 Internal Corrosion Protection**
• Inlet/outlet and backflushing line, rotatable	**2.2 OPTIONAL VERSIONS** *There are a range of optional versions available for the AutoFilt® RF3.*	• Glass flake lining
2.1.5 Housing Materials	**2.2.1 Control / Electrical Components / Voltage Supply**	• Special paints / coatings according to customer specifications
• Carbon steel	• Manual version of the AutoFilt® RF3	**2.2.9 Explosion Protection**
• Cast iron (only for sizes CG and DG)	• PLC control	• ATEX accprdomg to Directive 94/9/EC
• Stainless steel	• Filter without control for integration into customer's PLC	**2.2.10 Documentation**
2.1.6 Material of Internal Parts	• Filter interlocking for parallel operation	• Manufacturer's test certificates
• Stainless steel	• UL/CSA approved controls and components	• Material certificates 3.1 according to DIN EN 10204
2.1.7 Material of Elements	• Special IP protection classes	• GOST certificate
• Stainless steel	• Safe in tropical conditions	• 3rd parties (TÜV, ABS, Lloyds, etc.)
2.1.8 External Corrosion Protection	• Customized special solutions	• Welding procedure specifications (WPS) / Procedure Qualification Record (PQR)
• 2-coat primer (not required for stainless steel housing)	**2.2.2 Housing Manufacture**	• Inspection plan

Many others available on request.
Futher optional models on request.

Backflushing Filter AutoFilt® RF3

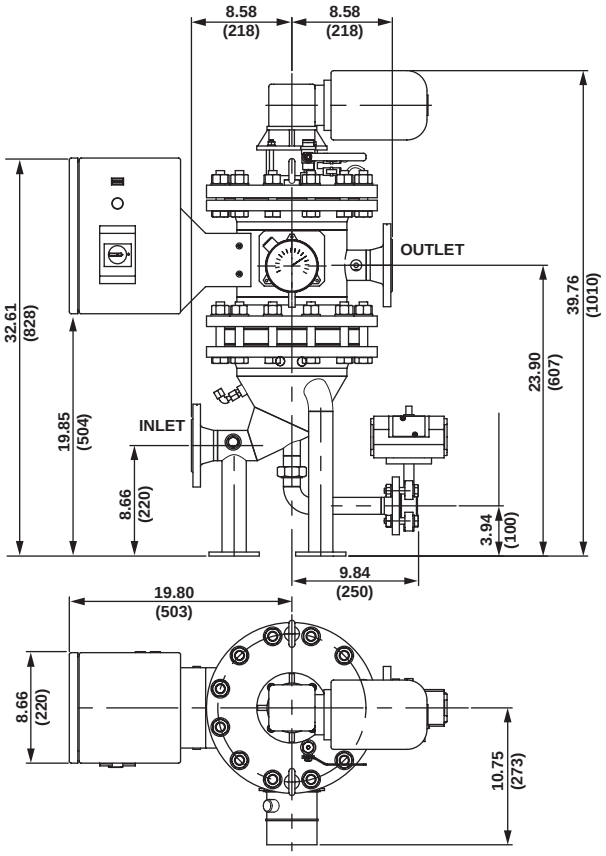

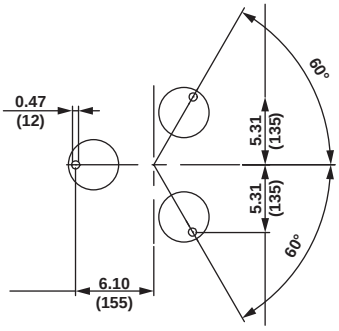

MOUNTING PATTERN

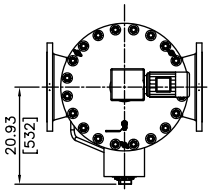

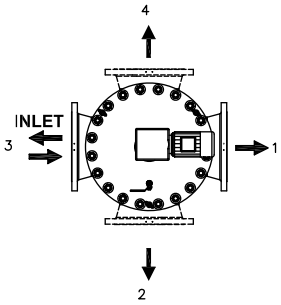

OUTLET FLANGE CONFIGURATIONS

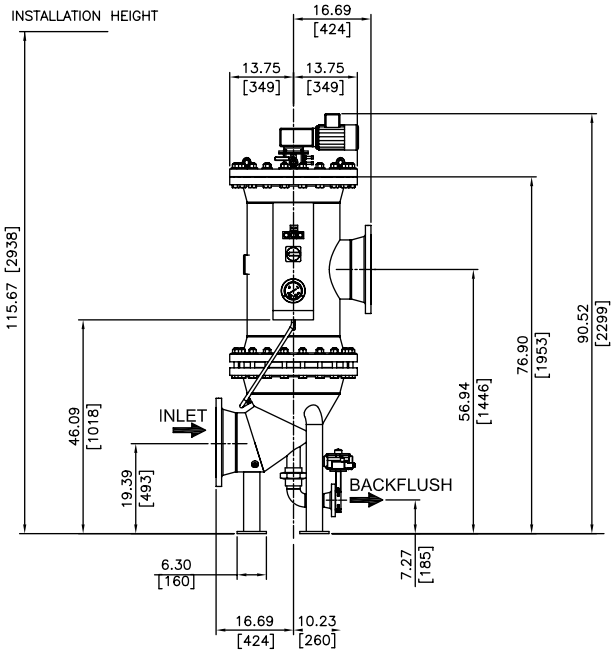

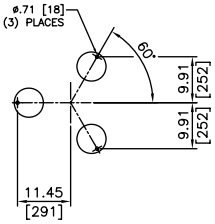

FLOOR MOUNTING PATTERN

Backflushing Filter AutoFilt® RF3

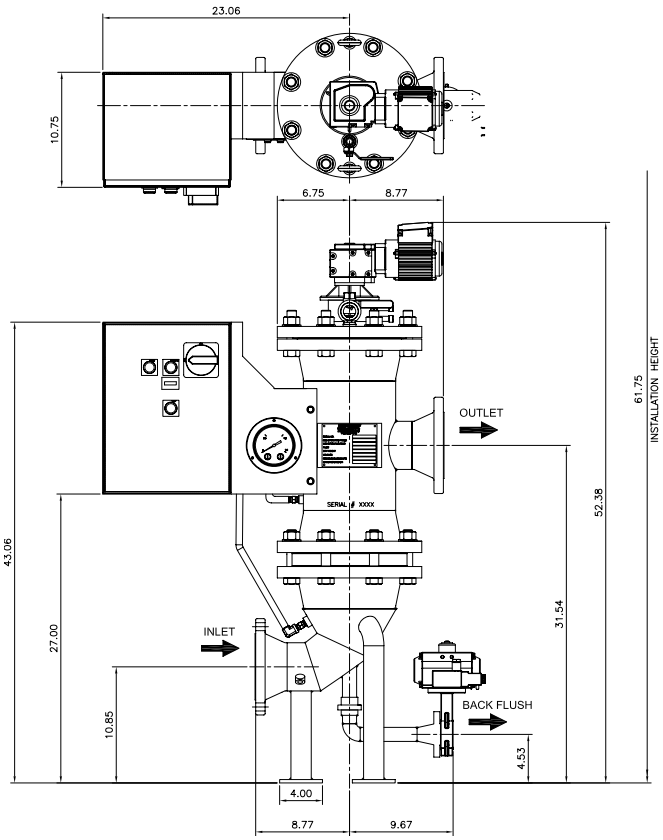

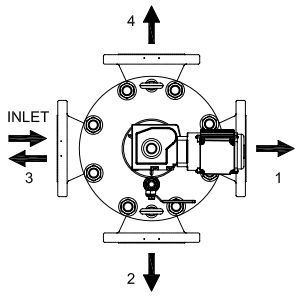

OUTLET FLANGE CONFIGURATIONS

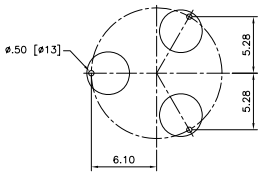

FLOOR MOUNTING PATTERN

Pressure Drop

Information Based on Flow Rate and Viscosity

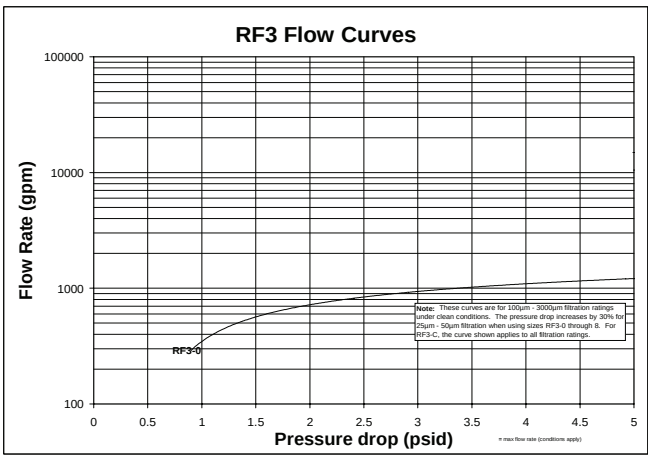

Backflushing Filter AutoFilt® RF3

How to Build a Valid Model Number for a RF3:

BOX 1	BOX 2	BOX 3	BOX 4	BOX 5	BOX 6	BOX 7	BOX 8	BOX 9
RF3								

Example: NOTE: One option per box

BOX 1	BOX 2	BOX 3	BOX 4	BOX 5	BOX 6	BOX 7	BOX 8	BOX 9
RF3	2.5	2	S	A	1	NM	E1	N

Continued on next page

BOX 1

Type
AutoFilt®

BOX 2

Filter Size	
C =	C [2" (232 psi)]
0 =	F [4" (145 psi)]
1 =	K [6" (145 psi)]
2 =	L [8" (145 psi)]
2.5 =	M [10" (145 psi)]
3 =	N [12" (145 psi)]
4 =	Q [16" (87 psi)]
5 =	R [20" (87 psi)]
6 =	S [24" (87 psi)]
7 =	T [28" (87 psi)]
8 =	U [36" (87 psi)]

BOX 3

Pressure Ranges	
1 =	87 psi
2 =	145 psi
3 =	232 psi
4 =	363 psi
5 =	580 psi
6 =	914 psi
7 =	1450 psi

BOX 4

Design Code	
S =	HYDAC Standard
A =	ASME VIII Div. 1
U =	ASME VIII Div. 1
E =	EN 13445

BOX 5

Controller	
A =	Electro-pneumatic cyclic control
B =	Electrical circulation control
C =	Electro-pneumatic circulation control
D =	Pneumatic cyclic control with timer function
M =	Manual
0 =	Without control, all consumers on terminal strip

BOX 6

Connection Voltage	
1 =	3 x 400V / N / PE 50Hz
2 =	3 x 400V / X / PE 50Hz
3 =	3 x 500V / X / PE 50Hz
4 =	3 x 230V / N / PE 50Hz
5 =	3 x 230V / X / PE 50Hz
6 =	3 x 415V / X / PE 50Hz
7 =	3 x 415V / N / PE 60Hz
8 =	3 x 460V / X / PE 60Hz
9 =	3 x 440V / X / PE 60Hz
A =	3 x 525V / X / PE 50Hz
B =	3 x 575V / X / PE 60Hz
C =	3 x 690V / X / PE 50Hz
D =	1 x 230V / N / PE 50Hz
E =	1 x 230V / N / PE 60Hz
F =	1 x 115V / N / PE 60Hz
G =	3 x 415V / N / PE 50Hz
H =	3 x 220V / X / PE 60Hz
I =	3 x 380V / X / PE 50Hz
K =	3 x 480V / X / PE 60Hz

BOX 7

Housing Material / Corrosion Protection	
N =	Carbon steel, primed on the outside (RAL 7040)
NM =	Carbon steel, primed on the outside (RAL 7040), inside 2-comp. epoxy coating
NP =	Carbon steel, primed on the outside (RAL 7040), inside 2-comp highly cross-linked polyurethane coating
NG =	Carbon steel, primed on the outside (RAL 7040), rubber lined inside
E1 =	Stainless steel 1.4301, 1.4541 or similar (group 304/321)
E2 =	Stainless steel 1.4571 or similar (group 316)
A =	"A" also added in case of ANSI flange
J =	"J" also added in case of JIS flange

BOX 8

Internals/Element Material	
E1 =	Stainless steel 1.4301, 1.4541 or similar (group 304/321), filter element stainless steel 1.4435 (group 316)
E2 =	Stainless steel 1.4571 or similar (group 316), filter element stainless steel 1.4435 (group 316)
ES =	Stainless steel 1.4571 or similar (group 316), filter element Superduplex (only wedge wire possible)
SE =	Superduplex, filter element stainless steel 1.4435 (group 316)
DE =	Duplex, filter element stainless steel 1.4435 (group 316)
DS =	Duplex, filter element Superduplex (only wedge wire possible)
SS =	Superduplex, filter element Superduplex (only wedge wire possible)

BOX 9

Back-Flush Valve	
0 =	None
N =	Flap: housing coated in spheroidal graphite iron, disc stainless steel, seal NBR (only up to pmax ≤ 16 bar!)
B =	Flap: housing coated in spheroidal graphite iron, disc bronze, seal NBR (only up to pmax ≤ 16 bar!)
M =	Flap: housing coated in spheroidal graphite iron, disc Superduplex, seal NBR (only up to pmax ≤ 16 bar!)
S =	Ball valve: ball stainless steel, housing up to a nominal size of 50 mm carbon steel and from a nominal size of 50 mm coated in spheroidal graphite iron, ball seal PTFE (from pmax > 16 bar!)
E =	Ball valve: ball stainless steel, housing stainless steel, ball seal PTFE (from pmax > 16 bar!)

NOTES:
Box 3. Needs to have control type and voltage selected ex. EPT8.
Box 4. can contain two options ex. NMA.
Note. If ANSI flanges are not specified DIN style will be provided.

Backflushing Filter AutoFilt® RF3

Model Code (continued)

How to Build a Valid Model Number for a RF3:

BOX 10	BOX 11	BOX 12	BOX 13	BOX 14
5				

Example: NOTE: One option per box

BOX 10	BOX 11	BOX 12	BOX 13	BOX 14	
5	1	0	3	SKS1000	= RF3-2.5N2SA1NME1N5103-SKS1000

BOX 10

Pressure Gauge	
0 =	None
1 =	Differential pressure gauge – aluminum pressure chamber (only up to 25 bar!)
2 =	Differential pressure gauge – stainless steel 1.4301 or similar (group 304/321) pressure chamber
3 =	Differential pressure gauge – with stainless steel 1.4301 or similar (group 304/321) diaphragm seal
4 =	Differential pressure gauge – brass pressure chamber
5 =	HDA 4700 stainless steel V2A group
6 =	HDA 4300 Duplex

BOX 13

Modification Number	
3 =	The latest number will be supplied

BOX 14

Filter Element Set	
KS =	Conical Wedge wire filter elements (50 - 3000 µm)
KD =	Conical SuperMesh filter elements (25/40/60 µm)
SKS =	Conical wedge wire filter elements with SuperFlush Coating
SKD =	Conical SuperMesh filter elements with SuperFlush Coating

BOX 14

Special number
For special models (number is allocated after technical clarification)

BOX 11

Flange Position	
1 =	Filter outlet opposite filter inlet (Standard)
2 =	Filter outlet offset 90° clockwise to default
3 =	Filter outlet offset 180° clockwise to default
4 =	Filter outlet offset 270° clockwise to default

BOX 12

Options	
0 =	None
A =	Certificate of conformance CoC 3.1 according to DIN EN 10204 for design, pressure and functional testing
C =	Acceptance test certificate 3.1 according to DIN EN 10204 for design, pressure and functional testing incl. material inspection certificates according to EN 10204, 3.1 for pressure-bearing media-contacting housing parts
D =	Material inspection certificates according to EN 10204, 3.1 for pressure-bearing media-contacting housing parts
E =	Russian equipment pass incl. explanation letter for TRCU 032 / 2013; also declaration of conformity for TRCU 010 / 2011
F =	End position switch position indicator for back-flushing valve (micro)
G =	End position switch position indicator for back-flushing valve (inductive)
H =	RAL 7040 top coat
I =	Davit
K =	Automatic vent valve
L =	PE-UHMW clutch bushing with FKM O-rings
M =	M12 x 1 male connector for electrical connections
N =	Drinking water approval NSF / ANSI 61-G & 372
P =	All seals FKM or FP2000
S =	Seawater version
T =	Marine / ship version

Notes Section:

RF5 Backflushing Filter AutoFilt® RF5

748-18,480 gpm
170-4200 L/min

87-150 psi
6-10 bar

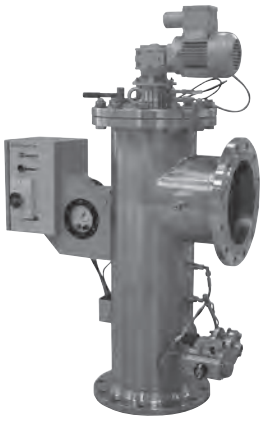

The automatic backflushing filter AutoFilt® RF5 has proven its reliable performance successfully for many years in a wide range of different industries. The new backflushing filter series AutoFilt® RF5 a new budget-priced filter series with a cost-optimized geometry that offers the same reliable filter performance in a variety of applications.

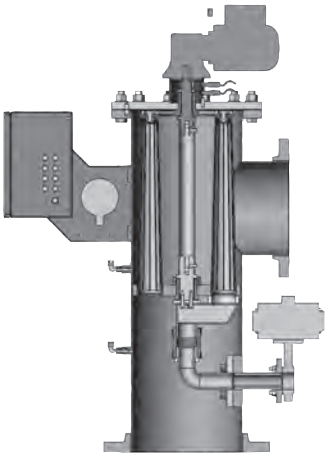

The function of the AutoFilt® RF5 is similar to the AutoFilt® RF3:

The fluid to be filtered flows through the slotted tube filter elements of the backflushing filter, passing from the inside to the outside. Contamination particles then collect on the smooth inside of the filter elements.

As the level of contamination increases, the differential pressure between the contaminated and clean sides of the filter increases. When the differential pressure reaches its pre-set value, backflushing starts automatically.

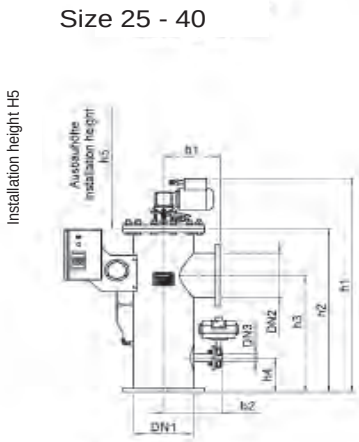

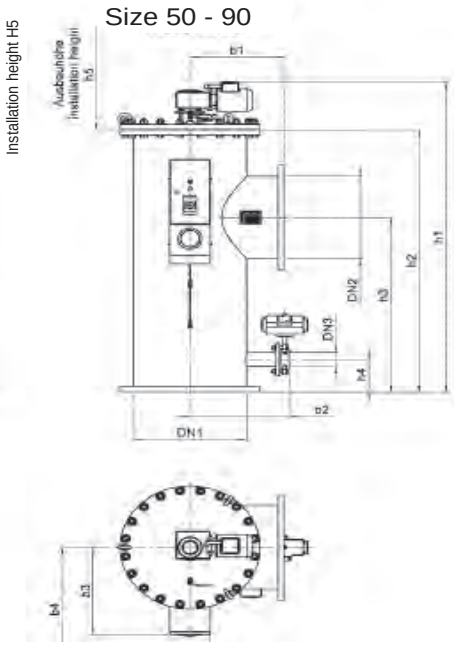

Dimensions

Size	DN1 in (mm)	DN2 in (mm)	DN3 in (mm)	H1 in (mm)	H2 in (mm)	H3 in (mm)	H4 in (mm)	H5 in (mm)	B1 in (mm)	B2 in (mm)	B3 in (mm)	B4 in (mm)
25	9.8 (250)	7.9 (200)	1.6 (40)	47.7 (1212.5)	35.9 (912.5)	24.6 (625)	7.1 (180)	21.7 (550)	11.8 (300)	10.8 (275)	20 (508)	28.7 (728
30	11.8 (300)	9.8 (250)	1.6 (40)	51.7 (1313.5)	39.4 (1001.5)	28.1 (715)	8.3 (210)	21.7 (550)	11.8 (300)	12.4 (314)	21 (533)	29.6 (753)
40	15.7 (400)	11.8 (300)	2.6 (65)	74.4 (1890.5)	62 (1575.5)	40.6 (1030)	7.1 (180)	41.3 (1050)	14.6 (370)	15 (380)	23 (575)	31.3 (795)
50	19.7 (500)	15.7 (400)	2.6 (65)	74.4 (1888.5)	62.4 (1585.5)	41.3 (1050)	7.5 (190)	41.3 (1050)	17.16 (435)	17.3 (440)	19.1 (485)	27.8 (705)
60	23.6 (600)	19.7 (500)	3.1 (80)	75 (1905.5)	63.3 (1608.5)	42.1 (1070)	7.9 (200)	41.3 (1050)	19.9 (505)	21 (534)	21.3 (540)	29.9 (760)
70	27.6 (700)	23.6 (600)	3.1 (80)	88.1 (2238.5)	74.5 (1903.5)	48.6 (1235)	7.9 (200)	53.1 (1350)	22.4 (570)	22.8 (580)	23.3 (593)	32 (813)
90	35.4 (900)	31.5 (800)	3.9 (100)	91.7 (2328.5)	78.5 (1993.5)	52.2 (1325)	8.9 (225)	53.1 (1350)	27.2 (690)	27.2 (690)	27.5 (698)	36.1 (918)

Backflushing Filter AutoFilt® RF5

Technical Data

Size	Pressure Rating psi / (bar)	Inlet	Outlet	Back flushing	Filtration Area in² / cm²	Flow Range gpm (L/min.)
25	145 (10)	DN 250	DN 200	DN 40	942 (6120)	748-1408 (170-320)
30	145 (10)	DN 300	DN 250	DN 40	1255 (8160)	1276-1980 (290-450)
40	87 (6)	DN 400	DN 300	DN 65	2603 (16920)	1760-3302 (6667-12500)
50	87 (6)	DN 500	DN 400	DN 65	3905 (25380)	2860-5280 (650-1200)
60	87 (6)	DN 600	DN 500	DN 80	7809 (50760)	4400-8360 (1000-1900)
70	87 (6)	DN 700	DN 600	DN 80	10920 (70980)	6600-12320 (1500-2800)
90	87 (6)	DN 900	DN 800	DN 100	18200 (118300)	11440-18480 (2600-4200)

Filter Model Number Selection

How to Build a Valid Model Number for a RF3:

BOX 1	BOX 2	BOX 3	BOX 4	BOX 5	BOX 6	BOX 7	BOX 8	BOX 9	BOX 10	BOX 11
RF5										

Example: NOTE: One option per box

BOX 1	BOX 2	BOX 3	BOX 4	BOX 5	BOX 6	BOX 7	BOX 8	BOX 9	BOX 10	BOX 11	
RF5	40	EPT8	NMA	N	5	3	2	ES300	40	ASME	= RF3-40-EPT8-NMA-N-5-3-2/ KS1000-40-ASME

BOX 1

Filter Series

RF5

BOX 2

Filter Size

25
30
40
50
60
70
90

BOX 3

Drive Control / Connecting Voltage

EPZ = Electric pneumatic cycle control
EZ = Electric Control
EPT = Electro-pneumatic cyclic control
PT = Pneumatic cyclic control
PTZ = Pneumatic cyclic timed control
7 = 3X415V/N/PE 60Hz
8 = 3X460V/X/PE 60Hz
9 = 3X440V/X/PE 60Hz
E = 1X230V/N/PE 60 Hz
F = 1X110V/N/PE 60Hz

BOX 4

Housing Material & Coating

N = Standard Steel outside primed
NM = Standard Steel outside primed, inside metallogal painted
E = Stainless Steel
A = with ANSI-flanged, additional A at the end

BOX 5

Shut Off Valve Material

N = Standard Steel
B = Bronze

BOX 6

Differential Pressure Gauge

1 = Pressure Chamber Aluminum 3.258302
2 = Pressure Chamber Stainless Steel 1.4305
3 = With Chemical Seal Stainless Steel 316TI
5 = HDA 4700 Stainless Steel
6 = HDA 4300 Duplex Stainless Steel

BOX 7

Control Box Position

1 = Control box offset by 90° clockwise to filter outlet
2 = Control box offset by 180° clockwise to filter outlet
3 = Control box offset by 270° clockwise to filter outlet

BOX 8

Modification Number

2 = Latest version supplied by factory

BOX 9

Element Set

ES200 = 200µ Conical Slotted Tubes
ES300 = 300µ Conical Slotted Tubes
ES400 = 400µ Conical Slotted Tubes
ES500 = 500µ Conical Slotted Tubes
ES1000 = 1000µ Conical Slotted Tubes
ES1500 = 1500µ Conical Slotted Tubes
ES2000 = 2000µ Conical Slotted Tubes
ES2500 = 2500µ Conical Slotted Tubes
ES3000 = 3000µ Conical Slotted Tubes

BOX 10

Size of Element Set

Same as BOX 2 Value

BOX 11

Vessel Certification

Omit = Standard Version
ASME = ASME Version

NOTES:
Box 3. Needs to have control type and voltage selected ex. EPT8.
Box 4. can contain two options ex. NMA.
note. If ANSI flanges are not specified DIN style will be provided.

RF7

Backflushing Filter AutoFilt® RF7

83-33,022 gpm
22-12,501 L/min

87-232 psi
6-18 bar

The automatic backflushing filter AutoFilt® RF3 has proven its reliable performance successfully for many years in a wide range of different industries. The horizontal backflushing filter AutoFilt® RF7 supplements our backflushing filter family. The AutoFilt® RF7 is a compact model range that is specifically designed for applications with small space and height restrictions.

The working principle and control systems of the AutoFilt® RF7 are identical to those of the AutoFilt® RF3.

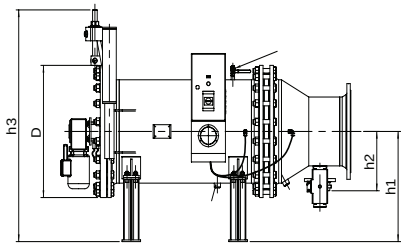

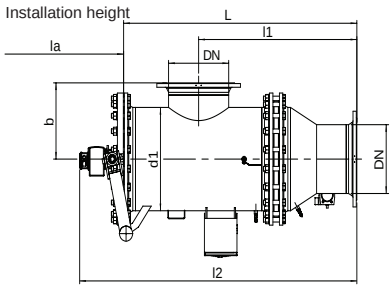

Dimensions

Size	DN in (mm)	DN1 in (mm)	l1 in (mm)	b in (mm)	h1 in (mm)	h2 in (mm)	h3 in (mm)	D in (mm)	d1 in (mm)	L in (mm)	l2 in (mm)	G1 in (mm)	G2 in (mm)	la in (mm)
CC	2 (50)	1 (25)	19.8 (504)	7.9 (200)	14.2 (360)	4.7 (120)	25.6 (650)	13.4 (340)	8.7 (220)	25 (635)	35.1 (892)	G1/4	G1/2	21.7 (550)
0B	3.9 (100)	1 (25)	23.5 (596)	7.9 (200)	15.2 (385)	5.9 (150)	27 (685)	13.4 (340)	8.7 (220)	33.5 (850)	45.9 (1165)	G1/4	G1/2	21.7 (550)
1B	5.9 (150)	1.6 (40)	25.5 (647)	10.6 (270)	17.7 (450)	7.4 (189)	31.7 (805)	17.5 (445)	12.8 (324)	35.4 (900)	47.8 (1215)	G1/4	G3/4	21.7 (550)
2B	7.9 (200)	2 (50)	30.1 (764)	12.8 (325)	19.7 (500)	8.6 (220)	39.4 (1000)	22.2 (565)	16 (406)	40.2 (1020)	52.6 (1335)	G1/4	G3/4	27.6 (700)
2.5B	9.8 (250)	2 (50)	40.3 (1024)	12.8 (325)	19.7 (500)	10.2 (260)	39.4 (1000)	22.2 (565)	16 (406)	58.3 (1480)	69.7 (1770)	G1/4	G3/4	27.6 (700)
3B	11.8 (300)	2.6 (65)	41.02 (1042)	15 (380)	23.2 (590)	11.02 (280)	47.2 (1200)	26.4 (670)	20 (508)	61.02 (1550)	72.8 (1848)	G1/4	G3/4	27.6 (700)
4A	15.7 (400)	3.1 (80)	42.1 (1069)	17.7 (450)	25.6 (650)	13.8 (350)	55.1 (1400)	30.7 (780)	24 (610)	62.05 (1576)	73.7 (1873)	G1/4	G3/4	27.6 (700)
5A	19.7 (500)	3.1 (80)	44.8 (1139)	21.7 (550)	29.5 (750)	14.6 (370)	62 (1575)	35.2 (895)	28 (711)	62.4 (1585)	75.6 (1920)	G1/4	1.5" Flange	27.6 (700)
6A	23.6 (600)	3.9 (100)	45.6 (1159)	24.6 (625)	33.1 (840)	18.7 (475)	68.9 (1750)	43.9 (1115)	36 (914)	66.5 (1690)	80.6 (2046)	G1/4	1.5" Flange	27.6 (700)
7A	27.6 (700)	3.9 (100)	47.2 (1200)	29.5 (750)	35.04 (890)	20.1 (510)	74.8 (1900)	48.4 (1230)	40 (1016)	58.1 (1475)	72 (1830)	G1/4	1.5" Flange	27.6 (700)
8A	3.5 (90)	5.9 (150)	58.0 (1474)	37.4 (950)	43.3 (1100)	24.4 (620)	88.6 (2250)	55.3 (1405)	48.03 (1220)	83.2 (2114)	96.9 (2460)	G1/4	1.5" Flange	27.6 (700)

Technical Data

Size	Pressure Rating psi (bar)	Connection Inlet/Outlet	Connection Backflushing Line	Weight Empty lbs (kg)	Volume Gallons (liters)	Amount of Filter Elements	Filter Area in² (cm²)	Backflushing Amount gal (liters)	gpm	Liters/ Minute
CC	230 (16)	2" Flange	1" Flange	286 (130)	4 (15)	6	332 (2140)	6.6 (25)	22-124	83-469
0B	150 (10)	4" Flange	1" Flange	342 (155)	7 (25)	6	590 (3810)	6.6 (25)	110-498	416-1885
1B	150 (10)	6" Flange	1.5" Flange	550 (250)	16 (60)	6	960 (6190)	9.2 (35)	396-1118	1499-4232
2B	150 (10)	8" Flange	2" Flange	825 (375)	28 (105)	8	1279 (8250)	13.2 (50)	880-1981	3331-7498
2.5B	150 (10)	10" Flange	2" Flange	1025 (465)	50 (190)	6	1938 (12500)	17.2 (65)	1761-2641	6666-9997
3B	150 (10)	12" Flange	2.5" Flange	1290 (585)	74 (280)	9	2906 (18750)	25.1 (95)	2421-3786	9164-14331
4A	87 (6)	16" Flange	3" Flange	1705 (775)	112 (425)	18	5813 (37500)	55.5 (210)	3566-7484	13498-28330
5A	87 (6)	20" Flange	3" Flange	2290 (1040)	168 (635)	24	8643 (55760)	82 (310)	6604-10787	24998-40833
6A	87 (6)	24" Flange	4" Flange	3635 (1650)	264 (998)	40	13811 (89100)	128.1 (485)	8805-15850	33330-59998
7A	87 (6)	28" Flange	4" Flange	4410 (2000)	358 (1355)	44	16446 (106100)	147 (555)	13208-22014	49997-83332
8A	87 (6)	36" Flange	6" Flange	7960 (3610)	716 (2710)	54	28009 (180700)	190.2 (720)	19813-33022	75000-125001

Backflushing Filter AutoFilt® RF7

How to Build a Valid Model Number for a RF3:

BOX 1	BOX 2	BOX 3	BOX 4	BOX 5	BOX 6	BOX 7	BOX 8	BOX 9	BOX 10	BOX 11
RF7										

Example: NOTE: One option per box

BOX 1	BOX 2	BOX 3	BOX 4	BOX 5	BOX 6	BOX 7	BOX 8	BOX 9	BOX 10	BOX 11	
RF7	3B	EPT7	NMA	N	5	1A	2	KS100	3B	ASME	= RF7-3B-EPT8-NMA-N-5-3-2/ KS1000-40-ASME

BOX 1

Filter Series

RF7

BOX 2

Filter Size

- CC
- 0B
- 1B
- 2B
- 2.5
- 3B
- 4A
- 5A
- 6A
- 7A
- 8A

BOX 3

Drive Control / Connecting Voltage

- EPT = Electro-pneumatic cyclic control, Δp dependent
- EU = Electric Control, Δp dependent
- PT = Pneumatic cyclic control
- PTZ = Pneumatic cyclic timed control
- 7 = 3X415V/N/PE 60Hz
- 8 = 3X460V/X/PE 60Hz
- 9 = 3X440V/X/PE 60Hz
- E = 1X230V/N/PE 60 Hz
- F = 1X110V/N/PE 60Hz

BOX 4

Housing Material & Coating

- N = Standard Steel 1.0038 outside primed
- NM = Standard Steel 1.0038 outside primed, inside metallogal painted
- E = Stainless Steel 1.4571
- A = with ANSI-flanged, additional A at the end

BOX 5

Shut Off Valve Material

- N = Butterfly housing SG cast iron coated, washer stainless steel
- B = Butterfly housing SG cast iron coated, washer bronze

BOX 6

Differential Pressure Gauge

- 1 = Pressure Chamber Aluminum 3.258302
- 2 = Pressure Chamber Stainless Steel 1.4305
- 3 = With Chemical Seal Stainless Steel 316TI
- 5 = HDA 4700 Stainless Steel
- 6 = HDA 4300 Duplex Stainless Steel

BOX 7

Flange Setting/ Backflushing Line Setting

- 1 = Outlet to right
- 2 = Outlet up
- 3 = Outlet to left
- A = Backflushing line to left
- B = Backflushing downwards
- C = Backflushing line to right

BOX 8

Modification Number

- 2 = Latest version supplied by factory

BOX 9

Element Set

- KD25 = Conical SuperMesh™
- K40 = Conical SuperMesh™
- KS50 = Conical Slotted Tubes
- KS100 = Conical Slotted Tubes
- KS200 = Conical Slotted Tubes
- KS300 = Conical Slotted Tubes
- KS400 = Conical Slotted Tubes
- KS500 = Conical Slotted Tubes
- KS1000 = Conical Slotted Tubes
- KS1500 = Conical Slotted Tubes
- KS2000 = Conical Slotted Tubes
- KS2500 = Conical Slotted Tubes
- KS3000 = Conical Slotted Tubes

BOX 10

Size of Element Set

Same as BOX 2 Value (first letter/numbr only)

BOX 11

Vessel Certification

- Omit = Standard Version
- ASME = ASME Version

NOTES:
Box 3. Needs to have control type and voltage selected ex. EPT8.
Box 4. can contain two options ex. NMA.
note. If ANSI flanges are not specified DIN style will be provided.

RF3 — RF3-8
RF5
RF7
RF10
RF4-1
RF4-2
RF4-3
RF12
RF14
BTU
ATF-1
ATF-2
ATF-2.5
ATF-3
ATF-3.5
ATF-4
PLF1
PLF2
PVD

Backflushing Filter AutoFilt® RF10

Traditional Automatic Backwash Filters are designed for high pressure applications with medium to lower loads.

What if pressure is low and contamination is high?
The new RF10 takes the best features of the RF3 and marries them with JetFlush technology. The operating principle subdivides the backflushing into two phases.

Phase One:
Stripping away the contaminant particles

Phase Two:
Discharging the contaminant particles

The new generation is dependent on influent pressure only and does not require the additional back pressure of the effluent to influent differential. With a JetFlush reservoir and internally guided JetFlush valves that can seal the upper lip creating an increased "suction" backflush, the RF10 can handle almost all difficult filtration applications.

Product Advantages:

- Back-flushing independent of pressure on clean side of filter
- Dependent only on the inlet pressure
- Highly efficient back-flushing with low pressure conditions and long back-flush lines
- With its highly efficient back-flushing, the filter is suitable for high dirt loads and surges in contamination
- Optional davit
- Variable filter isometry

Here is how the JetFlush Technology improves traditional ABF Technology:

Filtration
The medium being filtered enters the filter housing via the filter inlet (A) and flows through the filter elements of the back-flushing filter from the inside to the outside (B) and leaves the filter via the filter outlet (C). During the filtration process, the JetFlush reservoir (D) located above the filter elements fills with and stores medium from the contaminated side. As fluid is filtered, particles collect on the inside of the filter elements. As the level of contamination increases, the differential pressure between the contaminated and clean side of the filter increases. When the differential pressure reaches the pre-set trigger point, back-flushing starts automatically.

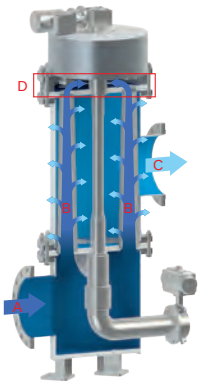

Filtration

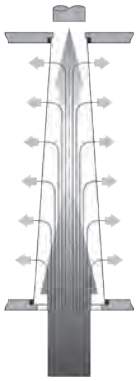

Back-Flushing In General
Automatic back-flushing is triggered:

- When the differential pressure trigger point is exceeded
- By means of a timer
- By pressing the test button

The gear motor (E) rotates the back-flushing arm (F) to the filter element to be cleaned (G). The back-flush valve (H) opens. The pressure drop between the filter inlet (A) and the back-flush line (I), combined with the conical geometry of the filter element, triggers the special JetFlush effect of the AutoFilt® RF10.

The remaining filter elements continue filtering to ensure uninterrupted filtration.

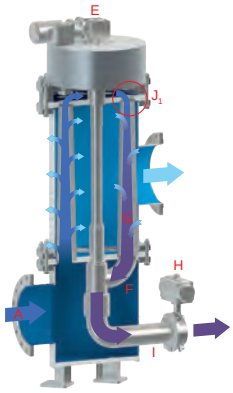

Back-flushing (phase 1)

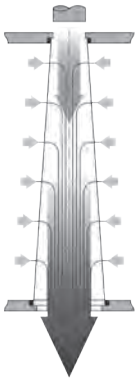

Backflushing Filter AutoFilt® RF10

Filter Elements

Back-Flushing Phase I
Phase 1 - Strupping away the contamination
In the first phase, unfiltered fluid from the JetFlush reservoir (J1) above flows into the filter element. The conical filter element geometry produces a core flow here, supplied mainly by the JetFlush reservoir. This core flow is supported by the open JetFlush effect, which also draws water from the filtrate side into the inside of the filter element.

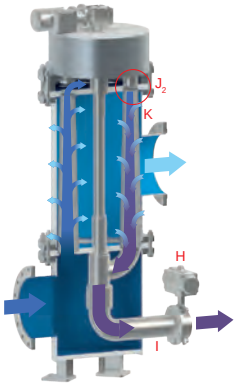

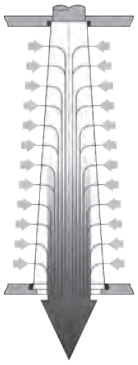

Back-Flushing Phase II
Phase 2 - Discharging the contamination
Once the core flow has developed, the JetFlush reservoir located above the filter element is closed (J2).

When the opening at the top of the filter element closes, the second phase is initiated, namely discharging the contamination:

The moving column of fluid draws water from the filtrate side (K) as soon as the fluid supply stops as a result of the filter element closing at the top.

The conical filter element geometry ensures the whole surface of the filter element is now clean and residue-free. The contamination is discharged via the back-flush line (I). After cleaning the filter element, the back-flushing arm rotates to the next filter element to be cleaned; the process is repeated. When the back-flush cycle is finished, the back-flush valve is closed (H).

Industries Served

Backflushing Filter AutoFilt® RF10

Dimensions

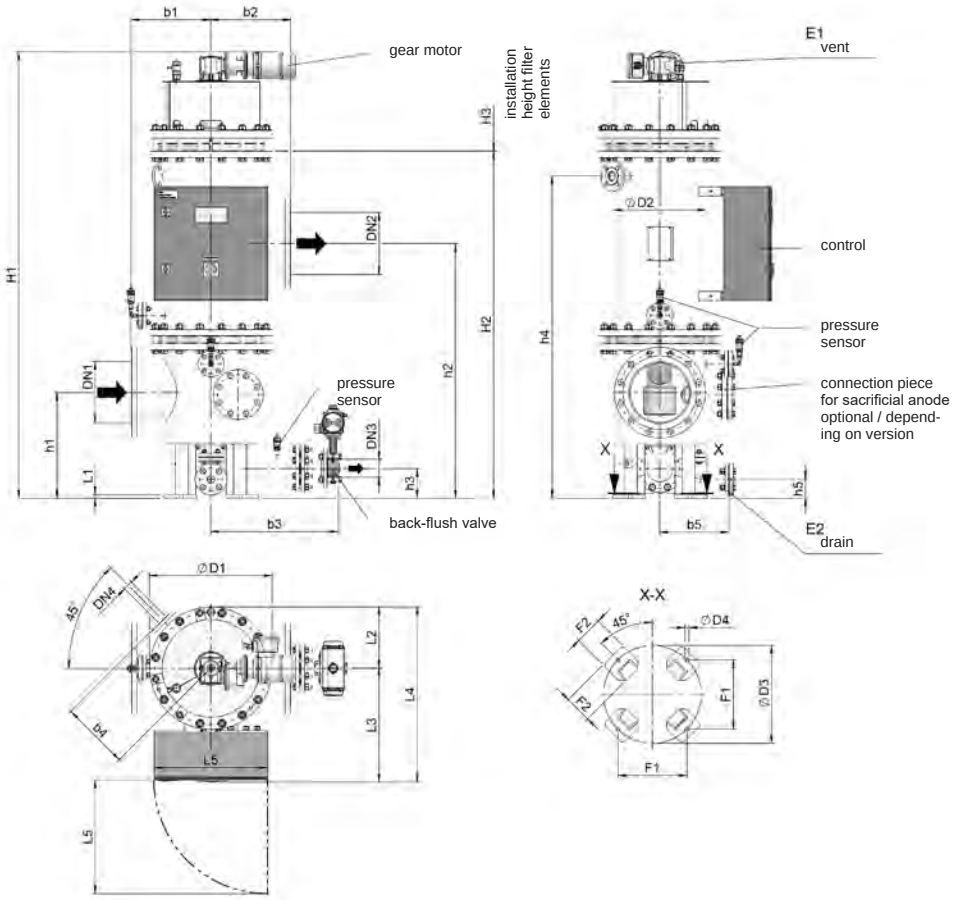

Specifications

Filter Sizes:	10, 20, 23, 25, 30, 35, 40, 50, 60
Flow Range:	2210-12,940 gpm (580-3420 L/min)
Working Pressure:	87 psi (6 bar)
Max. Working Temperature:	131°F (55°C)
Empty Weight:	10 - 624 lbs. (283 kg), 20 - 981 lbs. (445 kg), 23 - 1021 lbs. (463 kg), 25 - 1213 lbs. (550 kg), 30 - 1560 lbs. (725 kg), 35 - 1934 lbs. (877 kg), 40 - 2619 lbs. (1188 kg), 50 - 2985 lbs. (1354 kg), 60 - 5644 lbs. (2560 kg)
Housing Volume:	10 - 10 gallons (36 L), 20 - 25 gallons (95 L), 23 - 35 gallons (131 L), 25 - 42 gallons (160 L), 30 - 80 gallons (304 L), 35 - 119 gallons (452 L), 40 - 163 gallons (616 L), 50 - 235 gallons (891 L), 60 - 393 gallons (1489 L)
Filter Area:	10 - 558 in.^{2} (3,600 cm^2), 20 - 1,105 in.^{2} (7,128 cm^2), 23 - 1,868 in.^{2} (12,050 cm^2), 25 - 2,241 in.^{2} (14,460 cm^2), 30 - 3,362 in.^{2} (21,690 cm^2), 35 - 4,109 in.^{2} (26,510 cm^2), 40 - 6,724 in.^{2} (43,380 cm^2), 50 - 8,965 in.^{2} (57,840 cm^2), 60 - 14,942 in.^{2} (96,400 cm^2)
No. of Filter Elements	Contact Factory
Backflush Flange Size:	Contact Factory
Backflush Volume:	Contact Factory

Pressure Drop

Information Based on Flow Rate and Viscosity

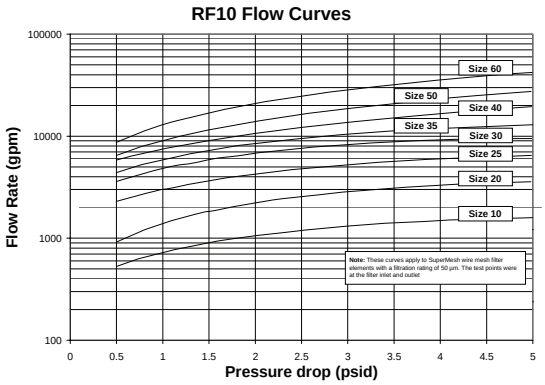

Backflushing Filter AutoFilt® RF10

Dimensions

Size	DN1 in (mm)	DN2 in (mm)	DN3 in (mm)	DN4 in (mm)	b1 in (mm)	b2 in (mm)	b3 in (mm)	b4 in (mm)	b5 in (mm)	h1 in (mm)	h2 in (mm)	h3 in (mm)	h4 in (mm)	h5 in (mm)	H1 in (mm)
RF10-10	10 (100)	10 (100)	4 (40)	G3/4	25 (250)	25 (250)	29.8 (298)	-	-	36 (360)	68.7 (687)	16 (160)	71.7 (717)	-	127.4 (1274)
RF10-20	20 (200)	20 (200)	6.5 (65)	2.5 (25)	32 (320)	32 (320)	30.5 (305)	28 (280)	29.5 (295)	42.5 (425)	88.5 (885)	16.1 (161)	100.5 (1005)	7.9 (79)	155.9 (1559)
RF10-23	20 (200)	20 (200)	6.5 (65)	2.5 (25)	32 (320)	32 (320)	30.5 (305)	28 (280)	29.5 (295)	42.5 (425)	110 (1100)	16.1 (161)	134.1 (1341)	7.9 (79)	189.5 (1895)
RF10-25	25 (250)	25 (250)	6.5 (65)	2.5 (25)	35 (350)	35 (350)	30.5 (305)	30 (300)	29.5 (295)	46.2 (462)	111.7 (1117)	13.1 (131)	141.4 (1414)	8.3 (83)	129.7 (1297)
RF10-30	30 (300)	30 (300)	6.5 (65)	2.5 (25)	40 (400)	40 (400)	62.1 (621)	35 (350)	33 (330)	42 (420)	112.6 (1126)	26.6 (266)	8.2 (82)	140.9 (1409)	197.8 (1978)
RF10-35	35 (350)	35 (350)	6.5 (65)	2.5 (25)	45 (450)	45 (450)	63.7 (637)	41 (410)	42 (420)	42 (420)	113.6 (1136)	26.6 (266)	8.2 (82)	XX (1424)	199.2 (1992)
RF10-40	40 (400)	40 (400)	8 (80)	2.5 (25)	52 (520)	52 (520)	73.5 (735)	46 (460)	47 (470)	47 (470)	122.5 (1225)	30 (300)	8.2 (82)	142.4 (1492)	212.5 (2125)
RF10-50	50 (500)	50 (500)	8 (80)	4 (40)	60 (600)	60 (600)	77 (770)	56 (560)	49 (490)	49 (490)	130 (1300)	35 (350)	10.5 (105)	157.6 (1576)	221 (2210)
RF10-60	60 (600)	60 (600)	10 (100)	4 (40)	70 (700)	70 (700)	90 (900)	65 (650)	61 (610)	61 (610)	136 (1360)	33 (330)	19.5 (195)	159 (1590)	227 (2270)

Size	H2 in (mm)	H3 in (mm)	L1 in (mm)	L2 in (mm)	L3 in (mm)	L4 in (mm)	L5 in (mm)	D1 in (mm)	D2 in (mm)	D3 in (mm)	D4 in (mm)	E1 in (mm)	E2 in (mm)	F1 in (mm)	F2 in (mm)
RF10-10	83.7 (837)	35 (350)	1 (10)	18.8 (188)	46 (460)	64.8 (648)	50 (500)	37.5 (375)	27.3 (273)	34 (340)	1.8 (18)	G1/2	G1/2	24 (240)	9 (90)
RF10-20	112.2 (1122)	55 (550)	1.5 (15)	24.5 (245)	51.7 (517)	76.2 (762)	50 (500)	49 (490)	35.56 (355.6)	37 (370)	1.8 (18)	DN25	G1/2	26.9 (269)	12 (120)
RF10-23	145.8 (1458)	70 (700)	1.5 (15)	24.5 (245)	46 (460)	70.5 (705)	50 (500)	49 (490)	35.56 (355.6)	49.6 (496)	1.8 (18)	DN25	G1/2	35.1 (351)	12 (120)
RF10-25	152.3 (1523)	55 (550)	1.5 (15)	27 (270)	47.7 (477)	74.7 (747)	50 (500)	54 (540)	40.64 (406.4)	43 (430)	1.8 (18)	DN25	G1/2	30.4 (304)	12 (120)
RF10-30	153.1 (1531)	70 (700)	1.5 (15)	32.3 (323)	49.7 (497)	82 (820)	50 (500)	64.5 (645)	50.8 (508)	54 (540)	1.8 (18)	G1/2	G1/2	38.2 (382)	15 (150)
RF10-35	154.8 (1548)	70 (700)	1.5 (15)	37.8 (378)	57.6 (576)	95.4 (954)	50 (500)	75.5 (755)	61 (610)	64 (640)	1.8 (18)	G1/2	G1/2	45.3 (453)	15 (150)
RF10-40	161.7 (1617)	70 (700)	1.5 (15)	48.5 (485)	63.2 (632)	111.7 (1117)	50 (500)	86 (860)	71.1 (711)	72.7 (727)	2.7 (27)	G1/2	G1/2	51.4 (514)	15 (150)
RF10-50	170.1 (1701)	70 (700)	2 (20)	54.3 (543)	69.8 (698)	124 (1240)	50 (500)	97.5 (975)	81.3 (813)	86 (860)	3 (30)	G1/2	G1/2	60.8 (608)	20 (200)
RF10-60	175.9 (1759)	70 (700)	2 (20)	64.3 (643)	79.5 (795)	143.8 (1438)	50 (500)	117.5 (1175)	101.6 (1016)	104 (1040)	3.2 (32)	G1/2	G1/2	73.5 (735)	20 (200)

Technical Data

Size	Pressure Rating psi (bar)	Connection Inlet/Outlet	Connection Backflushing Line	Weight Empty lbs (kg)	Volume Gallons (liters)	Amount of Filter Elements	Filter Area in² (cm²)	Backflushing Amount gal (liters)
10	87 (6)	DN 100	40	624 (283)	10 (36)	6	558 (3600)	154 (583)
20	87 (6)	DN 200	65	981 (445)	25 (95)	6	1105 (7128)	330 (1250)
23	87 (6)	DN 200	65	1025 (465)	35 (131)	5	1868 (12050)	374 (1417)
25	87 (6)	DN 250	65	1213 (550)	42 (160)	6	2241 (14460)	374 (1417)
30	87 (6)	DN 300	65	1598 (725)	80 (304)	9	3362 (21690)	374 (1417)
35	87 (6)	DN 350	65	1934 (877)	119 (452)	11	4109 (26510)	374 (1417)
40	87 (6)	DN 400	80	2619 (1188)	163 (616)	18	6724 (43380)	639 (2417)
50	87 (6)	DN 500	80	2985 (1354)	235 (891)	24	8965 (57840)	639 (2417)
60	87 (6)	DN 600	100	5644 (2560)	393 (1489)	40	14942 (96400)	903 (3417)

RF3 — RF3-8
RF5
RF7
RF10
RF4-1
RF4-2
RF4-3
RF12
RF14
BTU
ATF-1
ATF-2
ATF-2.5
ATF-3
ATF-3.5
ATF-4
PLF1
PLF2
PVD

Backflushing Filter AutoFilt® RF10 7

Filter Model Number Selection

How to Build a Valid Model Number for a RF10:

BOX 1	BOX 2	BOX 3	BOX 4	BOX 5	BOX 6	BOX 7	BOX 8	BOX 9	BOX 10	BOX 11	BOX 12	BOX 13	BOX 14	BOX 15	BOX 16	BOX 17
RF10																

Example: NOTE: One option per box

BOX 1	BOX 2	BOX 3	BOX 4	BOX 5	BOX 6	BOX 7	BOX 8	BOX 9	BOX 10	BOX 11	BOX 12	BOX 13	BOX 14	BOX 15	BOX 16	BOX 17
RF10	20	A	1		X	P	J	K	VN	B	2	1	H	1	1	0

Cont'd on page 45

BOX 1

Filter Series

RF10

BOX 2

Filter Size

10 =	DN 100	35 =	DN 350
20 =	DN 200	40 =	DN 400
23 =	DN 200	50 =	DN 500
25 =	DN 250	60 =	DN 600
30 =	DN 300		

BOX 3

Pressure Range

A = PN6
B = PN10

BOX 4

Type Of Control

1 = EPP electro-pneumatic control
2 = EPP functional control (triggered by the customer)
3 = Customer-specific version

BOX 5

Voltage Supply

1 = 3 x 400V / N / PE 50Hz
2 = 3 x 400V / x / PE 50Hz
3 = 3 x 500V / x / PE 50Hz
4 = 3 x 415V / x / PE 50Hz
5 = 3 x 415V / N / PE 60Hz
6 = 3 x 460V / x / PE 60Hz
7 = 3 x 440V / x / PE 60Hz
8 = 3 x 525V / x / PE 50Hz
9 = 3 x 575V / x / PE 60Hz
0 = 3 x 575V / x / PE 60Hz
Y = Customer-specific version

BOX 6

EX Protection

X = EX protection according to ATEX
C = EX protection according to IECEX

BOX 7

Housing Material

N = Carbon steel, external primer (RAL 9006), no corrosion protection, internal
M = Carbon steel, external primer (RAL 9006), 2K expoxy paint, internal
P = Carbon steel, external primer (RAL 9006), 2K polyuerthan paint, internal
E = Stainless steel AISI 304
H = Stainless steel AISI 316

BOX 8

Flange Standard

A = ANSI
F = DIN/EN
J = JIS

BOX 10

Material of Back-Flush Valve: Collar

N = NBR (standard)
E = EPDM
V = KFM (Viton)

BOX 9

Nominal Size

C =	DIN / EN 50 / ANSI 2"	M =	DIN / EN 250 / ANSI 10" (standard size 25)
D =	DIN / EN 65 / ANSI 2 1/2"	N =	DIN / EN 300 / ANSI 12" (standard size 30)
E =	DIN / EN 80 / ANSI 3"	P =	DIN / EN 350 / ANSI 14" (standard size 35)
F =	DIN / EN 100 / ANSI 4" (standard size 10)	Q =	DIN / EN 400 / ANSI 16" (standard size 40)
H =	DIN / EN 125 / ANSI 5"	J =	DIN / EN 450 / ANSI 18"
K =	DIN / EN 150 / ANSI 6"	R =	DIN / EN 500 / ANSI 20" (standard size 50)
L =	DIN / EN 200 / ANSI 8" (standard size 20, 23)	W =	DIN / EN 550 / ANSI 22"
		S =	DIN / EN 600 / ANSI 24" (standard size 60)

BOX 11

Material of Back-Flush Disc

N = Stainless Steel
B = Bronze
D = Duplex

BOX 12

Pressure Transmitter

0 = No pressure transmitter (flange connection on the filter remains)
1 = Pressure transmitter (P-in; P-out and P-rsl) with digital display (type EDS)
2 = Pressure transmitter (P-in; P-out and P-rsl) without digital display on the sensor (type HDA)

NOTES:
Box 12. Min. pressure is -15 psi (-1 bar) and max. pressure is 131 psi (9 bar), 218 psi (15 bar) and 334 psi (23 bar) depending on design pressure.

BOX 13

Flange Position

1 = Filter outlet opposite filter inlet (standard)
2 = Filter outlet offset by 90° clockwise to standard
3 = Filter outlet offset by 180° clockwise to standard
4 = Filter outlet offset by 270° clockwise to standard

BOX 14

Material of Internal Parts

H = Stainless Steel
D = Duplex
S = Superduplex

BOX 16

Modification Number

X = Determined by manufacturer

BOX 15

Sacrificial Anode

0 = No anode
1 = With sacrificial anode
2 = With flange connection, no sacrificial anode

BOX 16

Cover Plate Lifting Device

0 = No cover plate lifting device
1 = With cover plate lifting device

Backflushing Filter AutoFilt® RF10

Filter Element Model Number Selection

How to Build a Valid Model Number for a RF10:

BOX 18	BOX 19	BOX 20
S		

Example: NOTE: One option per box

BOX 18	BOX 19	BOX 20	
S	H	D	= RF10-20-A-1-7-X-P-J-K-N-B-2-1-H-1-1-0-S-H-D

BOX 18

Coating
S = SuperFlush (optional)

BOX 19

Material
H = Stainless Steel
D = Duplex*
S = Superduplex

BOX 20

Version
D = Conical wire mesh elements only available in stainless teel AISI 316
S = Conical slotted tube element

RF3 — RF3-8
RF5
RF7
RF10
RF4-1
RF4-2
RF4-3
RF12
RF14
BTU
ATF-1
ATF-2
ATF-2.5
ATF-3
ATF-3.5
ATF-4
PLF1
PLF2
PVD

RF4

Backflushing Filter AutoFilt® RF4

The automatic backflushing RF4 filter is a self-cleaning system for removing particles from low viscosity fluids. Its robust construction and automatic backflushing capability make a major contribution to operational reliability and reduce operating and maintenance costs. The slotted tube or SuperMesh™ filter elements with filtration rates from 25 to 1000 µm ensure highly effective separation of contaminating particles from the process medium.

Automatic cleaning starts as soon as the elements become contaminated. The flow of filtrate is not interrupted during the backflushing procedure. Two sizes allow flow rates from 10-60 gpm. The RF4 is available as a fully automatic or purely manual version.
Numerous combinations of materials and equipment as well as individually adjustable control parameters allow optimum adaptation of the filter to any application.

OPERATION OF THE RF4

Filtration

The fluid to be filtered flows through the slotted tube filter elements of the backflushing filter passing from the inside to the outside. Contamination particles collect on the smooth inside of the filter elements. As the level of the collected contamination increases, the differential pressure between the contaminated and clean sides of the filter increases. When the differential pressure reaches its pre-set value, the backflushing cycle begins.

Triggering Automatic Backflushing

Backflushing is triggered automatically when the differential pressure set point is exceeded. As soon as backflushing has been triggered, the filter starts to clean the filter elements.

Triggering Backflushing on Manual Version

When the differential pressure set point is reached, the visual clogging alarm indicates to an operator or maintenance personnel that a backflush cycle is needed.

Backflushing of the Filter Elements – Backflushing Cycle

The cycle begins with the element plate turning 90°. This brings a clean filter element into filtration, and a contaminated filter element is positioned over the fixed flushing connection.

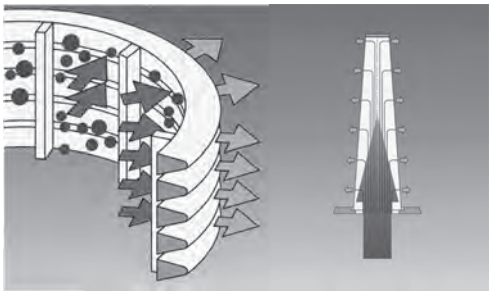

The backflush valve is opened.
The differential pressure between filtrate side and backflush line causes a small amount of the filtrate to reverse flow through the element to be cleaned. The contamination particles collected on the inside of the filter element are loosened and flushed into the backflush line via the flushing arm. As soon as the “backflushing time per element” has elapsed, the backflushing valve is closed. The backflushing cycle is terminated when all the filter elements have been cleaned. On the RF4 with manual backflushing, the element plate including filter elements, is turned and the backflushing valve is opened by hand. Each filter element is cleaned successively in this manner.

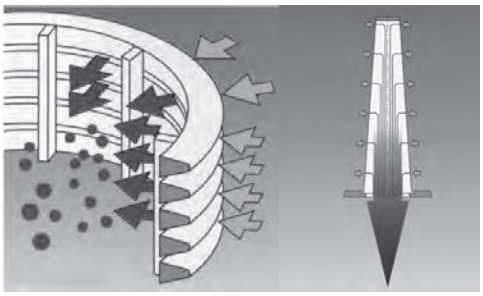

SPECIAL FEATURES OF THE RF4

Isokinetic Filtering and Backflushing

The special conical shape and configuration of the filter elements allows for even flow, resulting in low pressure drop and complete cleaning of the elements. The advantage: fewer backflushing cycles and lower loss of backflushing fluid.

Pulse-aided Backflushing

The filter element to be backflushed remains in the flushing position for only a few seconds. Rapid opening of the pneumatic backflushing valve generates a pressure surge in the openings of the filter elements that provides a pulse-aided cleaning effect to the backflushing process.

Low Backflushing Quantities Due to Cyclic Control

The backflush valve opens and closes during backflushing of each filter element, further minimizing the amount of filtrate needed to effectively clean the element.

Backflushing Filter AutoFilt® RF4

Water Applications

Fluid	Max. Flow Rate gpm (L/min)	
	RF4-1	RF4-2
Water	32(120)	60(220)

The flow rate ranges indicated apply to filtration ratings ≥ 100 µm

Important
The pressure drop curves apply to water and other fluids up to a viscosity of 11 mm²/s.

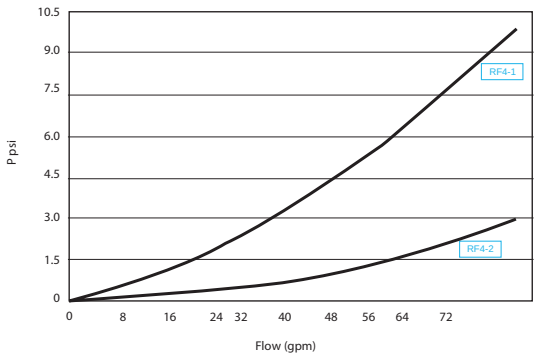

Cooling Lubricant Applications

Material Handling	Type of Machining	Max. Flow Rate gpm (L/min)	
		RF4-1	RF4-2
Aluminum	Cutting	26 (100)	53 (200)
Cast Iron	Cutting	18 (70)	42 (160)
Carbon Steel	Cutting	21 (80)	48 (180)
Stainless Steel	Cutting	21 (80)	48 (180)
Aluminum	Grinding	24 (90)	53 (200)
Cast Iron	Grinding	13 (50)	37 (140)
Carbon Steel	Grinding	16 (60)	40 (150)
Stainless Steel	Grinding	16 (60)	40 (150)

Circuit Diagram

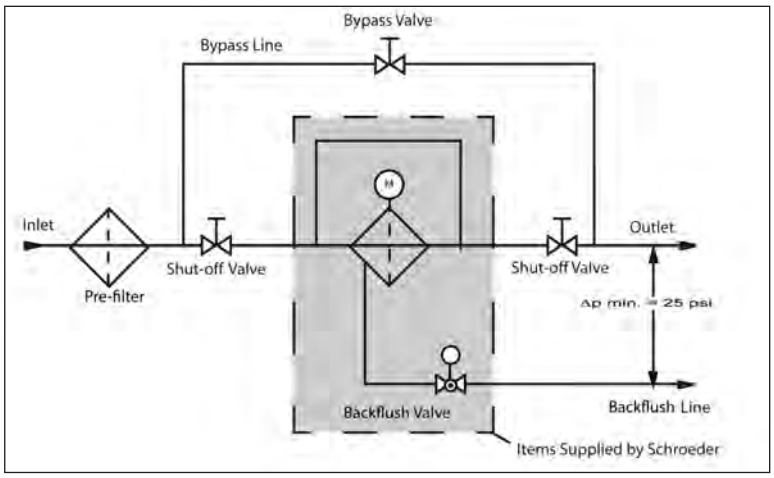

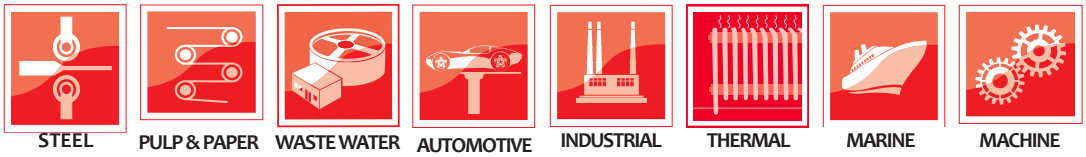

STEEL MAKING | PULP & PAPER | WASTE WATER TREATMENT | AUTOMOTIVE MANUFACTURING | INDUSTRIAL | THERMAL TRANSFER | MARINE | MACHINE TOOL

Industries Served

RF3 — RF3-8
RF5
RF7
RF10
RF4-1
RF4-2
RF4-3
RF12
RF14
BTU
ATF-1
ATF-2
ATF-2.5
ATF-3
ATF-3.5
ATF-4
PLF1
PLF2
PVD

RF4-1 Backflushing Filter AutoFilt® RF4

32 gpm
120 L/min

87 psi
6 bar
or
230 psi
16 bar

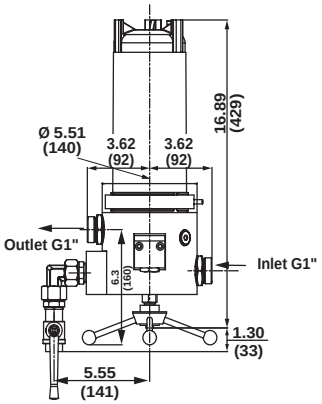

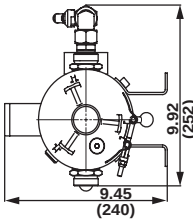

RF4-1
w/ Manual Controls,
87 psi

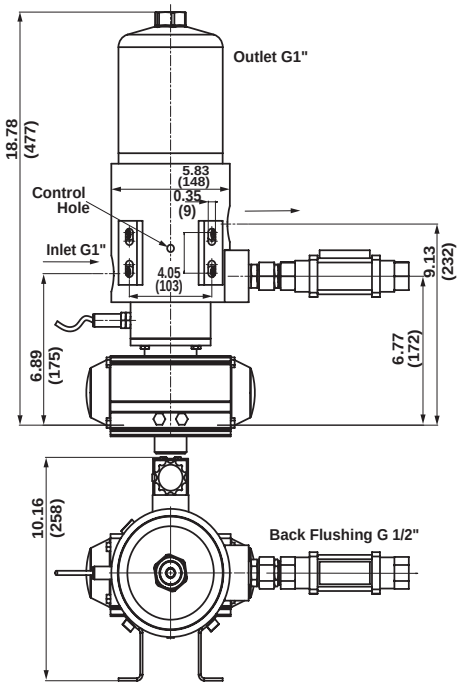

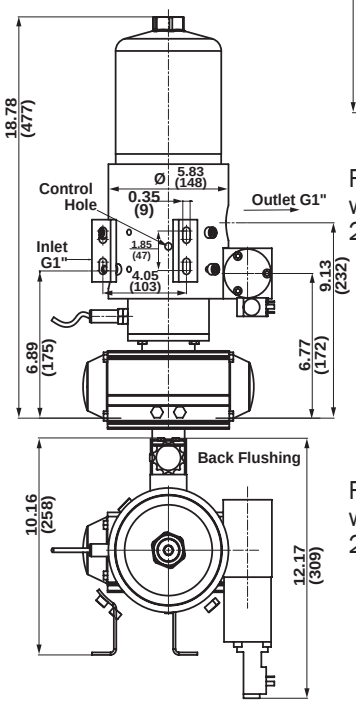

RF4-1
w/ Co-Ax Cable,
230 psi

RF4-1
w/ Lateral Valve,
230 psi

NOTES:
1. Metric dimensions in ( ).
2. Drawings may change without notice. Contact factory for certified drawings.

Specifications

Process Connection:	G 1" Female
Max Flow:	32 gpm (120 L/min)
Max. Working Pressure:	87 psi (6 bar) or 230 psi (16 bar)
Max. Working Temperature:	194°F (90°C)
Weight:	29 lbs. (13 kg) or 33 lbs. (15kg)
Housing Volume:	0.66 gallons (2.5 L)
Filter Area:	85in.^{2} (548 cm^2)
No. of Filter Elements	4
Backflush Connection:	G½ Female
Backflush Volume:	1.1 gallons (4 L/cycle)

Backflushing Filter AutoFilt® RF4

How to Build a Valid Model Number for a RF4:

BOX 1	BOX 2	BOX 3	BOX 4	BOX 5	BOX 6	BOX 7	BOX 8	BOX 9	BOX 10	BOX 11
RF4										

Example: NOTE: One option per box

BOX 1	BOX 2	BOX 3	BOX 4	BOX 5	BOX 6	BOX 7	BOX 8	BOX 9	BOX 10	BOX 11	
RF4	1	ET	1	AA	E	CO	2	16	X	KMS50	= RF41ET1AAECO216XKMS50

BOX 1

Filter Series

RF4

BOX 2

Size

1 = G1"

BOX 3

Control Type

EPT = Electro-pneumatic cyclic control, (including pneumatic drive)
ET = Electric Control
M = Manual

BOX 4

Voltage Type

0 = Without control, without solenoid value
1 = With control* and solenoid valve 230 V AC
2 = With control* and solenoid valve 24 V AC
3 = Without control, with solenoid valve 24 V AC
4 = Without control, with solenoid valve 24 V AC

Only for ET control:

0C = Without control*, drive 3 x 400 V/N/PE, 60 HZ
1C = With control*, drive 3 x 400 V/N/PE, 60 Hz

*Supply voltage of control is 110-120 V AC, 60 Hz

BOX 5

Materials

AA = Aluminum head & bowl (only RF$-1, 230 psi)
EE = Stainless Steel head and bowl (only RF4-1, 87 psi)

BOX 6

Material of Internal Parts

E = Stainless Steel

BOX 7

Backflushing Valve

0 = Without backflushing valve
CO = Coaxial valve, brass
KN = Ball valve, nickel plated brass (only on M or EPT controll models)
KE = Ball valve, nickel plated brass (only on M or EPT control models)

BOX 8

Differential Pressure Control

0 = Without differential pressure monitoring
1 = Fixed value: 7.3 psi (0.5 bar), Type DS 32 N/O contact
2 = Adjustable: 1.5 psi (0.1 bar) - 14.5 psi (1 bar), Type DS 31, N/O contact

BOX 9

Pressure Range

06 = 87 psi (6 bar) (housing fastened with clamp), only for housings in stainless steel design
16 = 230 psi (16 bar) (filter upper section threaded)

BOX 10

Modification No.

X = Latest version is always supplied

BOX 11

Element Type & Size

KMS = Slotted Tubes, 30 to 1000µm
KMD = SuperMesh™ 25µm, 40µm, 60µm
SKMS = Slotted Tube Superflush 30 µm to 1000 µm
SKMD = SuperMesh™ Superflush 25µm, 40 µm, 60µm

NOTES:
Box 5. AA only available for 16 bar.
AP only available for 6 bar.

RF3 — RF3-8
RF5
RF7
RF10
RF4-1
RF4-2
RF4-3
RF12
RF14
BTU
ATF-1
ATF-2
ATF-2.5
ATF-3
ATF-3.5
ATF-4
PLF1
PLF2
PVD

RF4-2 Backflushing Filter AutoFilt® RF4

60 gpm
220 L/min

87 psi
6 bar

Or

230 psi
16 bar

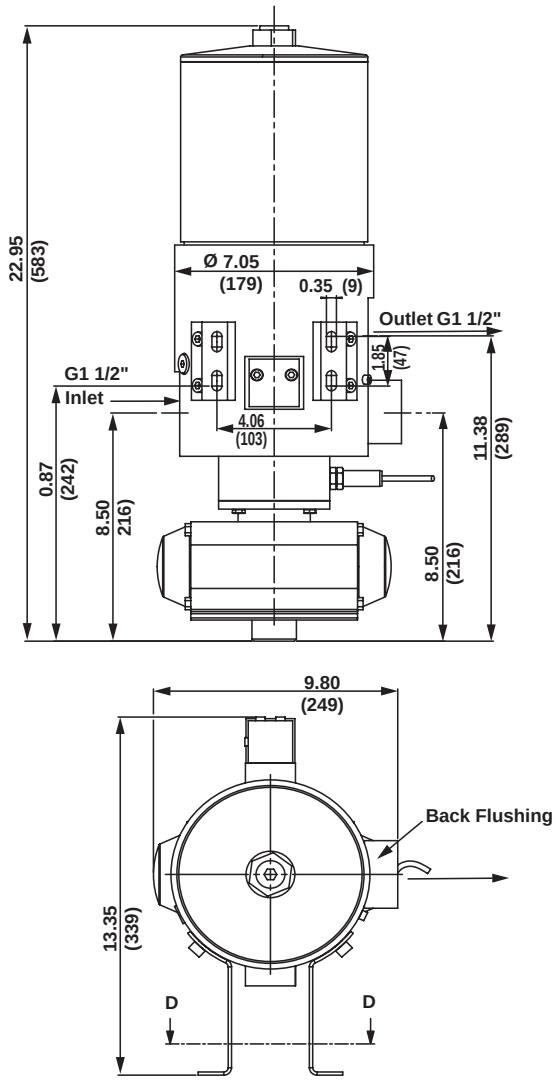

RF4-2
w/ Co-Ax Cable,
230 psi

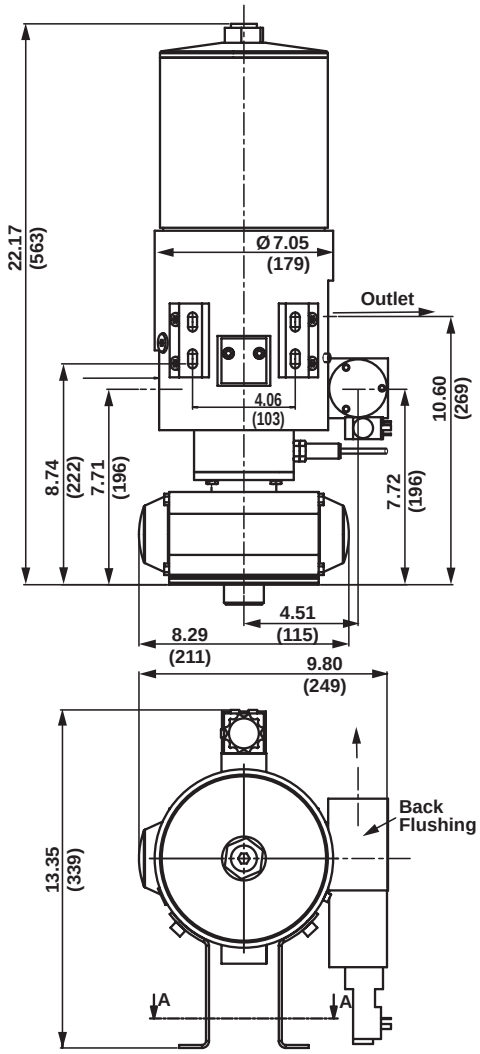

RF4-2
w/ Lateral Valve,
230 psi

NOTES:
1. Metric dimensions in ( ).
2. Drawings may change without notice. Contact factory for certified drawings.

Specifications

Process Connection:	G1½" Female
Max Flow:	60 gpm (220 L/min)
Max. Working Pressure:	87 psi (6 bar) or 230 psi (16 bar)
Max. Working Temperature:	194°F (90°C)
Weight:	71 lbs. (32 kg) or 140 lbs. (63kg)
Housing Volume:	1.0 gallons (3.7 L)
Filter Area:	220in.^{2} (1420 cm^2)
No. of Filter Elements	4
Backflush Connection:	G¾ Female
Backflush Volume:	3.4 gallons (13 L/cycle)

Backflushing Filter AutoFilt® RF4

How to Build a Valid Model Number for a RF4:

BOX 1	BOX 2	BOX 3	BOX 4	BOX 5	BOX 6	BOX 7	BOX 8	BOX 9	BOX 10	BOX 11
RF4										

Example: NOTE: One option per box

BOX 1	BOX 2	BOX 3	BOX 4	BOX 5	BOX 6	BOX 7	BOX 8	BOX 9	BOX 10	BOX 11	
RF4	2	ET	1	NN	E	CO	2	16	X	KMS50	= RF42ET1NNECO216XKMS50

BOX 1

Filter Series

RF4

BOX 2

Size

2 = G1" 1/2

BOX 3

Control Type

EPT = Electro-pneumatic cyclic control, (including pneumatic drive)

ET = Electric Control

M = Manual

BOX 4

Voltage Type

0 = Without control, without solenoid value

1 = With control* and solenoid valve 230 V AC

2 = With control* and solenoid valve 24 V AC

3 = Without control, with solenoid valve 24 V AC

4 = Without control, with solenoid valve 24 V AC

Only for ET control:

0C = Without control*, drive 3 x 400 V/N/PE, 60 HZ

1C = With control*, drive 3 x 400 V/N/PE, 60 Hz

*Supply voltage of control is 110-120 V AC, 60 Hz

BOX 5

Materials

NN = Carbon Steel, nickel plated (only RF4-2 230 psi)

EE = Stainless Steel head and bowl (only RF4-2, 87 psi)

BOX 6

Material of Internal Parts

E = Stainless Steel

BOX 7

Backflushing Valve

0 = Without backflushing valve

CO = Coaxial valve, brass

KN = Ball valve, nickel plated brass (only on M or EPT controll models)

KE = Ball valve, nickel plated brass (only on M or EPT control models)

BOX 8

Differential Pressure Control

0 = Without differential pressure monitoring

1 = Fixed value: 7.3 psi (0.5 bar), Type DS 32 N/O contact

2 = Adjustable: 1.5 psi (0.1 bar) - 14.5 psi (1 bar), Type DS 31, N/O contact

BOX 9

Pressure Range

06 = 87 psi (6 bar) (housing fastened with clamp), only for housings in stainless steel design

16 = 230 psi (16 bar) (filter upper section threaded)

BOX 10

Modification No.

X = Latest version is always supplied

BOX 11

Element Type & Size

KMS = Slotted Tubes, 30 to 1000µm

KMD = SuperMesh™ 25µm, 40µm, 60µm

SKMS = Slotted Tube Superflush 30 µm to 1000 µm

SKMD = SuperMesh™ Superflush 25µm, 40 µm, 60µm

NOTES:
Box 5. AA only available for 16 bar.
AP only available for 6 bar.

RF3 — RF3-8
RF5
RF7
RF10
RF4-1
RF4-2
RF4-3
RF12
RF14
BTU
ATF-1
ATF-2
ATF-2.5
ATF-3
ATF-3.5
ATF-4
PLF1
PLF2
PVD

RF4W-3 Backflushing Filter AutoFilt® RF4-3

120 gpm
450 L/min

232 psi
16 bar

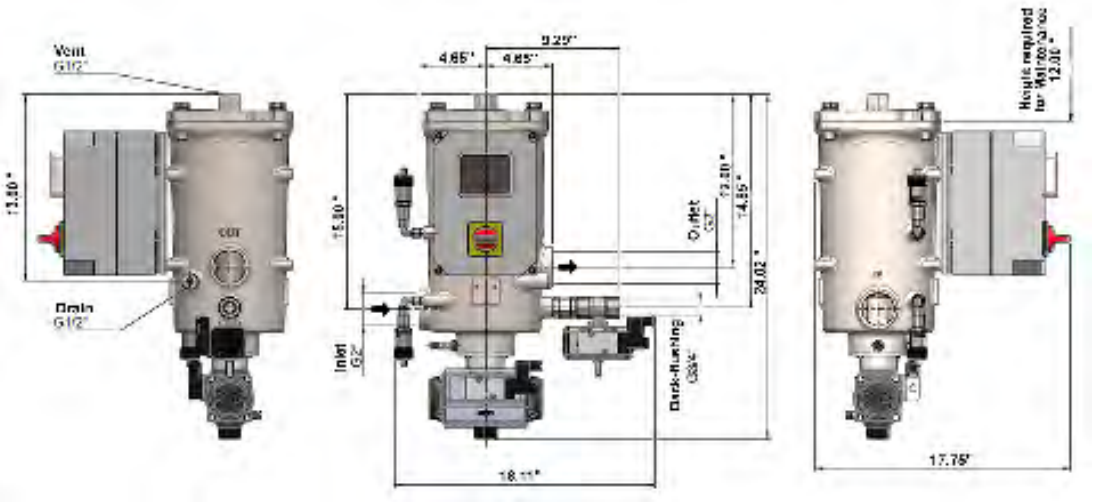

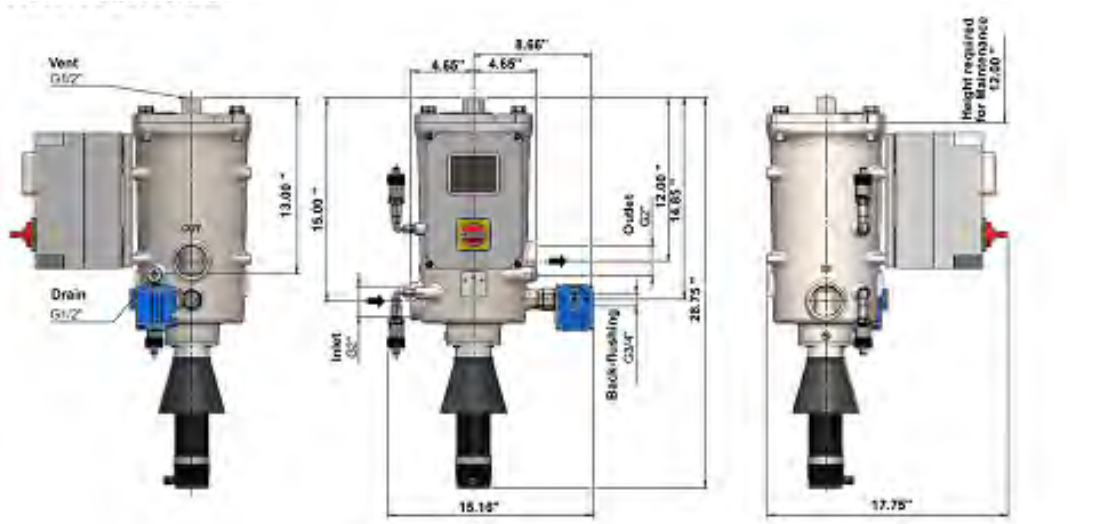

NOTES:
1. Metric dimensions in ( ).
2. Drawings may change without notice. Contact factory for certified drawings.

Specifications

Connection Size:	• Inlet/Outlet: G2" • Back-flush line: G¾
Flow Rate Q_{max}:	450 l/min (120 gpm)
Design Pressure p_{max}	16 bar (232 psi)
Design Temperature T_{max}:	80° C (176°F)
Filtration Rating:	25 — 1000 µm
Filter Elements / Filter Area:	4 pieces: 1430 cm² (222 in²) 6 pieces: 2140 cm² (332 in²) 7 pieces: 2500 cm² (388 in²)
Housing Material:	Stainless steel cast 1.4581
Weight:	45 kg (99.2 lbs)

Backflushing Filter AutoFilt® RF4

How to Build a Valid Model Number for a RF4:

BOX 1	BOX 2	BOX 3	BOX 4	BOX 5	BOX 6	BOX 7	BOX 8	BOX 9	BOX 10	BOX 11
RF4										

Example: NOTE: One option per box

BOX 1	BOX 2	BOX 3	BOX 4	BOX 5	BOX 6	BOX 7	BOX 8	BOX 9	BOX 10	BOX 11	
RF4	2	ET	1	NN	E	CO	2	16	X	KMS50	= RF42ET1NNECO216XKMS50

BOX 1

Filter Type	
RF4WL =	Left Filter Inlet - Standard
RF4WR =	Right Filter Inlet

BOX 2

Size	
3 =	G2"

BOX 3

Pressure Ranges	
2 =	10 bar (only for EU)
3 =	16 bar (EPT & EU)

BOX 4

Number of Filter Elements	
4 =	4 pieces
6 =	6 pieces - Standard
7 =	7 pieces - only in case of high dirt load

BOX 5

Base Frame / Wall Assembly	
0 =	Without - standard
1 =	For wall mounting
2 =	With base frame
3 =	Air-bleed valve & piping
4 =	Automatic vent valve (plastic) and piping

BOX 6

Control Type	
A =	EPT: Electro-pneumatic cyclic control
B =	EU: Electrical circulation control - Standard

BOX 7

Power Supply Voltage	
D =	Supply voltage 230VAC 50Hz/60Hz (EPT & EU) - Standard (= Gear motor, control valve or backflush valve unit 24VDC)
F =	Supply voltage 115VAC 60Hz (EU gear motor) (= Gear motor, control valve or backflush valve unit 24VDC)
L =	Supply voltage 24VDC (only for EPT)

BOX 8

Version	
0 =	Without control, loose cable, cable length 5 meters
1 =	Basic terminal box on filter, actuators & sensors on the terminal strip
2 =	ACU Basic on Filter - Standard
3 =	ACU Basic with 5 meters cable for wall mounting
4 =	ACU (metal control cabinet, with 5 meter cable for wall mounting)

BOX 9

Differential Pressure Monitoring	
5 =	HDA 4700 Stainless steel V2A (4-20 mA), 2 pieces

BOX 10

Housing Material / Coating	
E2 =	Stainless steel casting 1.4581(Group 316) - Standard

BOX 11

Inner Parts	
E1 =	Stainless steel 1.4301, 1.4541 or similar (Group 304/321) - Standard
E2 =	Stainless steel 1.4401, 1.4404, 1.4571 or similar (Group 316)

BOX 12

End Documentation	
0 =	Standard (Assembly & Operating manual, E plan, Declaration of Incorporation)
A =	Certificate of Conformance CoC + standard
B =	Acceptance test certificate 3.1 according to DIN EN 10204 for design, pressure and function test + standard
C =	Acceptance test certificate 3.1 according to DIN EN 10204 for design, pressure and function test
D =	Material inspection certificates according to EN 10204, 3.1 for pressure-bearing media-contacting housing parts + standard
E =	Russian device pass incl. explanation letter for TRCU 031/2013; additional Declaration of Conformity for TRCU 010/2011 + standard

BOX 13

Modification Number
The latest version is always supplied (currently 2)

BOX 14

Filter Elements / Filtration Rating	
S =	"S" additionally prefixed for SuperFlush
KNS =	Wedge wire 50 µm up to 1000 µm
KND =	SuperMesh 25 µm, 40 µm, 60 µm (3-layer)
Filtration Ratings:	KNS 50 µm, 100 µm, 150 µm, 200 µm, 250 µm, 300 µm, 500 µm, 1000 µm
Filtration Ratings:	KND 25 µm, 40 µm, 60 µm
	Other filtration ratings available on request

BOX 15

Special Number
For special design (number will be issued after technical clarification in the Head Office)

RF3 — RF3-8
RF5
RF7
RF10
RF4-1
RF4-2
RF4-3
RF12
RF14
BTU
ATF-1
ATF-2
ATF-2.5
ATF-3
ATF-3.5
ATF-4
PLF1
PLF2
PVD

RF12 Backflushing Filter AutoFilt® RF12

21 gpm
80 L/min

145 psi
10 bar

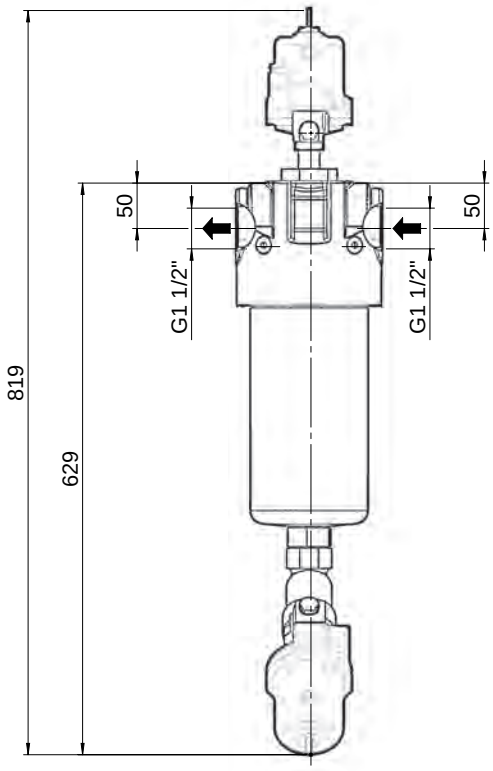

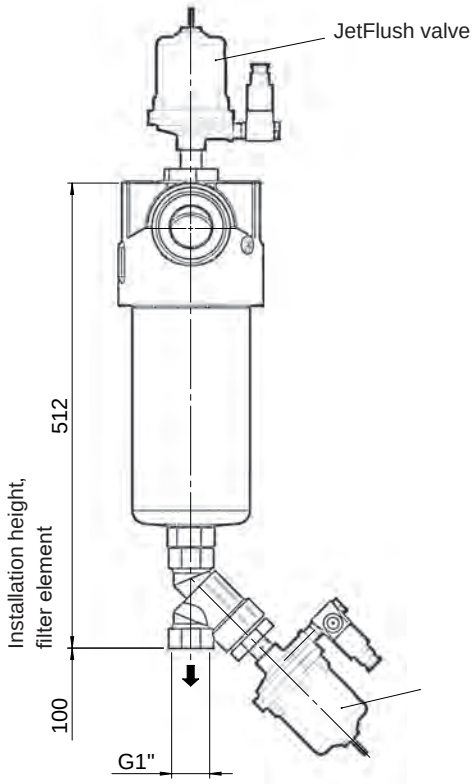

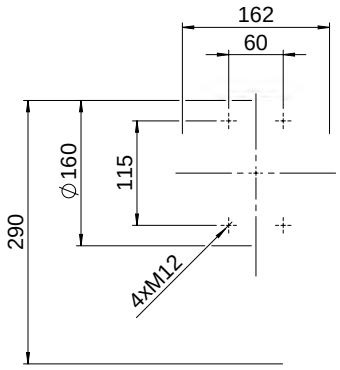

NOTES:
1. Metric dimensions in ( ).
2. Drawings may change without notice. Contact factory for certified drawings.

Specifications

Process Connection:	G 1½" Female
Max Flow:	21 gpm (80 L/min)
Max. Working Pressure:	145 psi (10 bar)
Weight:	33 lbs. (15 kg)
Housing Volume:	0.48 gallons (1.8 L)
Filter Area:	55 in.^{2} (356 cm^2)
No. of Filter Elements	1
Backflush Connection:	G1" Female
Backflush Volume:	0.79 gallons (3 L/cycle)

Backflushing Filter AutoFilt® RF12

RF3 — RF3-8
RF5
RF7
RF10
RF4-1
RF4-2
RF12
RF12
RF14
BTU
ATF-1
ATF-2
ATF-2.5
ATF-3
ATF-3.5
ATF-4
PLF1
PLF2
PVD

How to Build a Valid Model Number for a RF12:

BOX 1	BOX 2	BOX 3	BOX 4	BOX 5	BOX 6	BOX 7	BOX 8
RF12							

Example: NOTE: One option per box

BOX 1	BOX 2	BOX 3	BOX 4	BOX 5	BOX 6	BOX 7	BOX 8	
RF12	EP0	1	S	0	10	X	KSD25	= RF12-1-EP0-1-S-0-10-X / KSD25

BOX 1

Filter Series

RF12

BOX 2

Protective Filter

- EP0 = Electropneumatic control without pilot valves
- EP1 = Electropneumatic contol incl. pilot valve
- EP2 = Electropneumatic control incl. pilot valve 24 VDC Device connector M12x1 (w/o mating connector)
- EP3 = Electropneumatic control incl. pilot valve 230 VAC Device connector DIN En 175301-803 / form A (w/o mating connector)
- EPZ3 = Electropneumatic control incl. pilot valve 230 VAC, with timer control (1 x 230V/N/PE 50 Hz)
- EPD3 = Electropneumatic control incl. pilot valve 230 VAC, with differential pressure control (1 x 230V/N/PE 50 Hz)

BOX 3

Material

1 = Filter housing: aluminum, internal parts: stainless steel

BOX 4

Back-Flushing Valve

- 0 = Without G1" connection
- CO = Coaxial valve, brass
- KN = Ball valve, brass nickel-plated
- S = Piston control valve, brass

BOX 5

Differential Pressure Monitoring

- 0 = Without differential pressure monitoring
- 5 = 2x HDA 4700 stainless steel (4-20 mA)
- 7 = Fixed value 0.5 bar. Type GW, n.c. contact

BOX 6

Pressure Range

10 = 145 psi (10 bar)

BOX 7

Modification Code

X = Latest version is always supplied

BOX 8

Filter Elements / Filtration Rating

- S = Preceded with an additional "S" for SuperFlush non-sticking coating
- KSS = Wedge wire 30µm
- KSS = SuperMesh wire mesh, sintered, 25 µm / 40 µm / 60 µm; others on request

RF14 Backflushing Filter AutoFilt® RF14

15,400 gpm
58,295 L/min

88 psi
6 bar

The AutoFilt® RF14 is a self-cleaning system for extracting particles from low viscosity fluids. Its robust construction and automatic back-flushing capability make a major contribution to operational reliability and reduce operating and maintenance costs. The slotted or SuperMesh baskets in the filter with filtration rates from 10 to 100µm ensure highly effective filtration of contaminating particles from the process medium.

Automatic cleaning starts as soon as the elements become contaminated. The flow of filtrate is not interrupted during the back-flushing procedure. A range of filters of different sizes allow flow rates of up to 15,400 gpm. Numerous combinations of materials and equipment as well as individually adjustable control parameters allow optimum adaptation of the filter to any application.

This type of fully automatic self-cleaning screen filter has been used for decades in applications wherever suspended solids need to be removed from a pressurized water stream. They are used to remove sand, silt and algae from raw water taken from lakes, ponds, rivers and canals. Such filters provide pretreatment before membrane filtration systems for potable water supply. Other installations include pretreatment for reverse osmosis and other desalination systems. Many municipal and industrial wastewater treatment plants use these filters to prepare secondary effluent for reuse in cooling, irrigation and aquifer recharge systems. Applications in steel mills filtering grimy, oily cooling water are common as are those in the automotive and plastics industries. Cement plants and mining operations use this type of filter for removing solids from tailings. They are found on deep-sea oil platforms for filtering flood water and on ships before portable desalination systems and ballast systems.

Filtration

A back-flushing cycle is complete once the basket element has been cleaned. Filter continues to filter and forward flow is not impeded by backwash cycle.

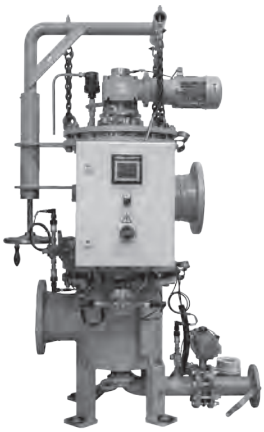

Special Features of the AutoFilt® Isokinetic Filtering and Back-Flushing

The special configuration of the filter basket elements allows even flow, resulting in low pressure drops and complete cleaning of the elements. The advantage: fewer back-flushing cycles and reduced loss of back-flushing fluid.

Pulse-aided Back-Flushing on the control types EPT and PT; the filter basket to be backflushed remains in the flushing position for only a few seconds. Rapid opening of the pneumatic back-flushing valve generates a pressure surge in the filter nozzle openings, providing an additional cleaning effect to the back-flushing process as it cleans the basket as it rotates around the basket area.

Low Back-Flushing Quantities due to cyclic control the back-flushing valve opens and closes during back-flushing. The filter, which produces particularly good flow rates, is of a compact construction with high filtration performance and low pressure drops. The RF14 will use less than 0.5% of the forward flow for backwash.

The fluid to be filtered flows through the slotted filter basket element of the back-flushing filter, passing from the inside to the outside.
Contamination particles then collect on the smooth inside of the filter basket elements. As the level of contamination increases, the differential pressure between the contaminated and clean sides of the filter increases. When the differential pressure reaches its preset value, back-flushing starts automatically.

Triggering Automatic Back-Flushing

Back-flushing is triggered automatically: when the triggering differential pressure is exceeded. **Back-flushing can also be started:**

- By means of an adjustable timer (optional)
- By pressing the TEST key
- As soon as back-flushing has been triggered, the filter starts to clean the filter basket

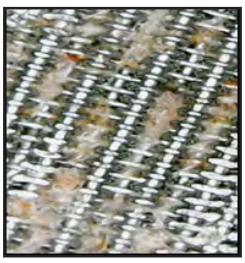

Before Cleaning

Back-Flushing of the Filter Basket Elements - Back-Flushing Cycle

- The gear motor rotates the nozzles around the interior of the basket
- The back-flushing valve is opened
- The pressure drop between the filtrate side and the back-flushing line rinses a small partial flow of the filtrate in the opposite direction into the filter elements to be cleaned. The contamination particles deposited on the inside of the filter basket element are detached and carried out via the nozzles into the back-flushing line.

Backflushing Filter AutoFilt® RF14

- After the back-flushing time is complete, the back-flushing valve is closed. In this way, the nozzles have cleaned all areas of the filter basket.
- Initiating the most effective and instantaneous back-flush differential at all areas of the basket filter.

After Cleaning

Variable Filter Isometry

The inlet and outlet flanges as well as the back-flushing line can be configured in different positions. This means that the filter can be easily integrated into any plant lay-out.

Ready-to-Operate Unit

The filter control unit and differential pressure measuring line are already connected. Once the filter has been fitted to the pipework, only the auxiliary power supply needs to be connected.

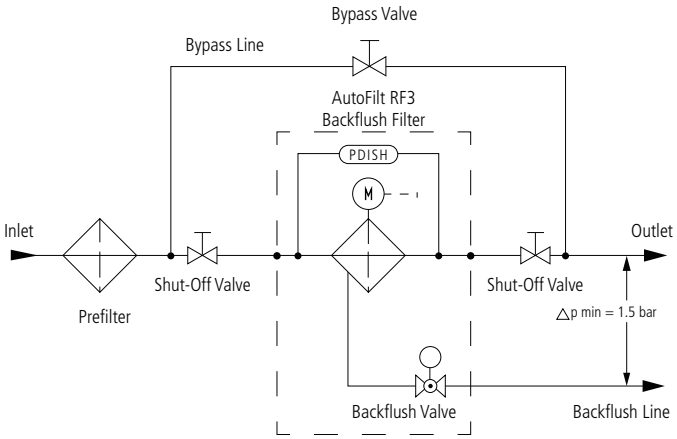

Filter Size	Operating Pressure *min-max psi*	Inlet/ Outlet *(in) Plain Weave*	Inlet/ Outlet *(in) Delta Mesh*	Backflush Line *(in)*	Weight *(lbs) Operating*	Volume *(gal.)*	Length *(in)*	Width *(in)*	Foot-print *(in²)*	Clean Pressure Differential *(psi)*
10	29-97	4"	5"	2"	584.22	8.98	19.685	19.685	11.811	1.45
15	29-97	6"	8"	2.5"	742.96	17.17	23.622	19.685	11.811	1.45
20	29-97	8"	10"	3"	930.35	38.04	27.559	23.622	15.748	1.45
25	29-97	10"	12"	3"	1,219.15	73.18	27.559	27.559	19.685	1.45
30	29-97	12"	14"	4"	1,924.63	105.67	39.37	27.559	27.559	1.45
35	29-97	14"	16"	4"	2,612.47	108.31	43.307	27.559	31.496	1.45
40	29-97	16"	18"	4"	3,714.78	234.32	47.244	35.433	43.307	1.45
45	29-97	18"	20"	4"	4,166.763	369.05	51.181	43.307	55.118	1.45
50	29-97	20"	24"	5"	5,103.70	446.98	55.118	43.307	59.055	1.45
60	29-97	24"	28"	5"	7,605.94	747.61	62.992	51.181	82.677	1.45

Filter Size	Min. Backwash Volume *(gal.)*	Min. Flow *(gpm)*	Max Flow (gpm) w/ Delta Mesh 40 micron
10	10.70	229	616
15	13.91	387	1,166
20	16.91	572	2,288
25	16.91	572	3,036
30	22.20	986	4,400
35	22.20	986	5,000
40	22.20	986	5,280
45	22.20	986	8,800
50	27.75	1,540	11,440
60	27.75	1,540	15,400

RF3 — RF3-8
RF5
RF7
RF10
RF4-1
RF4-2
RF4-3
RF14
RF14
BTU
ATF-1
ATF-2
ATF-2.5
Specifications
ATF-3
ATF-3.5
ATF-4
PLF1
PLF2
PVD

Backflushing Filter AutoFilt® RF14

Filter Model Number Selection

How to Build a Valid Model Number for a RF14:

BOX 1	BOX 2	BOX 3	BOX 4	BOX 5	BOX 6	BOX 7	BOX 8	BOX 9	BOX 10	BOX 11
RF14M										

Example: NOTE: One option per box

BOX 1	BOX 2	BOX 3	BOX 4	BOX 5	BOX 6	BOX 7	BOX 8	BOX 9	BOX 10	BOX 11
RF14M	252	F	S	0	X	P	J	K	VN	5

BOX 1

Filter Type

RF14M =	Marine Model
RF14J =	Industry model*

BOX 2

Connection Flange	RF14 Size 10	15	20	25	30	35	40	45	50	60
1	5"	8"	10"	12"	14"	16"	18"	20"	24"	28"
2	4"	6"	8"	10"	12"	14"	16"	18"	20"	24"
3	3"	5"	6"	8"	10"	12"	14"	16"	16"	20"
4	2.5"	4"	5"	6"	8"	10"	12	12"	14"	16"
5	2"	3"	4"	5"	6"	8"	10"	10"	12"	14"
Y	Customer Specific Model									

BOX 3

Flange Standard Connection Point

A =	ANSI
F =	DIN / EN
J =	JIS

BOX 4

Design Code

S =	HYDAC Standard
A =	ASME VIII Div. 1
U =	ASME VIII Div. 1
E =	EN 13445

BOX 5

Control Type

0 =	Without control, with terminal box
1 =	Without control, without terminal box, cable loose
2 =	EPS Electro-pneumatic control with AutoFilt® ACU
Y =	Customer-specific model

BOX 9

Pressure Range

A =	PN 6
B =	PN 10

BOX 6

Connection Voltage

1 =	3 x 400V / N / PE 50 Hz
2 =	3 x 400V / X / PE 50 Hz
3 =	3 x 500V / X / PE 50 Hz
4 =	3 x 230V / N / PE 50 Hz
5 =	3 x 230V / X / PE 50 Hz
Y =	Customer-specific model
6 =	3 x 415V / X / PE 50 Hz
7 =	3 x 415V / X / PE 50 Hz
8 =	3 x 460V / X / PE 60 Hz
9 =	3 x 440V / X / PE 60 Hz
A =	3 x 525V / X / PE 50 Hz
B =	3 x 575V / X / PE60 Hz
C =	3 x 690V / X / PE 50 Hz
G =	3 x 415V / N / PE 50 Hz
H =	3 x 220V / X / PE 60 Hz
I =	3 x 380V / X / PE 50 Hz
K =	3 x 480V / X / PE 60 Hz

BOX 7

Explosion-Protection

X =	EX-protection according to ATEX
C =	EX-protection according to IECEX

Specification omitted, if not applicable

BOX 8

Housing / Corrosion Protection Material

N =	Carbon steel, primer (RAL 7040), inside without corrosion protection
M =	Carbon steel, primer (RAL 7040), inside 2-comp. epoxy coating
P =	Carbon steel, primer (RAL 7040), inside 2-comp. Highly cross-linked PU-lining
E =	Stainless steel 1.4301, 1.4541 or similar (Group 304/321)
H =	Stainless steel 1.4571 or similar (group 316)

BOX 10

Material Back-Flush Valve Unit

N =	Butterfly valve: spheroidal graphite cast iron-coated housing, stainless steel disc and shaft, NBR seal
B =	Butterfly valve: spheroidal graphite cast iron-coated housing, bronze disc and shaft, NBR seal
M =	Butterfly valve: spheroidal graphite cast iron-coated housing, Super-Duplex disc and shaft, NBR seal
V =	Butterfly valve: spheroidal graphite cast iron-coated housing, stainless steel disc and shaft, FKM/FPM seal

BOX 11

Pressure Transmitter

0 =	Without pressure transmitter (Pressure measurement connection to the filter is retained)
5 =	HDA 4700 stainless steel V2A group (not for filter model M - marine)
6 =	HDA 4300 Duplex

cont. on next page

Backflushing Filter AutoFilt® RF14

RF3 — RF3-8
RF5
RF7
RF10
RF4-1
RF4-2
RF4-3
RF14
RF14
BTU
ATF-1
ATF-2
ATF-2.5
ATF-3
ATF-3.5
ATF-4
PLF1
PLF2
PVD

How to Build a Valid Model Number for a RF14:

BOX 12	BOX 13	BOX 14	BOX 15	BOX 16	BOX 17	BOX 18	BOX 19
1							

Example: NOTE: One option per box

BOX 12	BOX 13	BOX 14	BOX 15	BOX 16	BOX 17	BOX 18	BOX 19	
1	H	345P	0	M	H	A	40	= RF14M252FS21XPAN51H345P0MHA40

BOX 12

Flange Position	
1 =	Filter outlet opposite filter inlet (Standard)
2 =	Filter outlet offset 90° clockwise to default
3 =	Filter outlet offset 180° clockwise to default
4 =	Filter outlet offset 270° clockwise to default

BOX 13

Internal Parts	
H =	Stainless steel 1.4404 or similar (group 316)
E =	Stainless steel 1.4301, 1.4541 or similar material (group 304/x321)
D=	Duplex
S =	SuperDuplex

BOX 14

Options	
0 =	Without
1 =	Without integrated protection basket
2 =	With davit
3 =	Pressure transmitter in back-flush line
4 =	Top coat RAL 7040
5 =	Automatic vent vale (plastic)
6 =	Automatic vent valve (stainless steel/SuperDuplex)
7 =	With sacrificial anode (O-ring material made of silicone element, conductive)
A =	Certificate of Conformance CoC
B =	Acceptance test certificate 3.1 acc. to DIN EN 10204 for design, pressure and function test
C =	Acceptance test certificate 3.1 acc. to DIN EN 10204 for design, pressure and function test incl. material cert. acc. to EN 10204, 3.1 for the pressure bearing vessel parts in contact with media
D =	Material products to EN 10204, 3.1 for pressurized vessel parts that come into contact with media
P =	With back-flush pump

BOX 15

Modification Number	
0 =	The latest number will be supplied

BOX 16

Filter Element	
M =	Marine model
J =	Industry model

BOX 17

Material Type	
H =	Stainless steel 1.4404 or similar (group 316)
E =	Stainless steel 1.4301, 1.4541 or similar material group
D =	Duplex
S =	SuperDuplex

BOX 18

Material Type	
A =	Wire Mesh Plain
B =	Wire Mesh Δ - Mesh
only for sizes 10 - 35	

BOX 19

Nominal Filtration Rating

AutoFilt® RF14	Filter Model		→ Recommended Flange Sizes*											
Filtration Ratings	Marine (M)	Industry (J)	Filter Element Type A						Filter Element Type B					
10µm	-	X					4	5						
20µm	X	X				3	4	5			**2**	3		
30µm	-	X				3	4							
40µm	X	X			**2**	3				1	**2**			
50µm	X	X		1	**2**					1	**2**			
70µm	-	X		1	**2**									
90µm	-	X		1										

** Model recommendation based on experiences with sea-water and serves only as orientation*

Seal material of filter element without anode is identical to seal material of the butterfly valve
Seal material of filter element with anode is always silicone

BTU Backflush Treatment Unit

32-1120 gpm
120-4235 L/min

150 psi
10 bar

The BTU unit with integral backflushing filter is a turnkey automatic filtration unit for watermiscible cooling lubricants, oils or washing water which continuously filters solid particles, such as very fine magnetic and non-magnetic metal particles, corundum, sand particles etc. It provides long-term filtration producing reduced-particle filtrate. The quality of the filtrate is dependent on the separation limit of the filter used.

BTU1

BTU3

A BTU unit generally consists of:

- Backflushing filter for the main filtration
- Process twist sieve (PTS) to treat the backflushed volume
- Buffer tank with components (only BTU1)
- Control

The process twist sieve (PTS) is a component which is fitted downstream from the backflushing filter to filter the backflushed volume. In this way, with the help of the twist sieve, a further filtration process is carried out via the backflushing line.

The solid particles from the backflushing volume are collected in a bag filter which is suspended under the twist sieve. When this is full, it is easy to dispose of by pulling open the drawer.

The fluid filtered by the twist sieve or the bag flows back to the buffer tank (BTU1). As soon as the fluid level in the buffer tank reaches the upper switch point of the level gauge (optional), the tank pump (optional) empties the tank.

Due to the short-term pressure shock when backflushing the automatic filter and due to the tangential inlet flow, the fluid is filtered by the wire mesh inside the twist sieve. Approx. 70 % of the backflushing volume passes through the twist sieve and is therefore already filtered when it flows into the buffer tank below the filter via the channel on one side of the twist sieve.

The remaining 30 % of fluid which is heavily contaminated with particles is forced by the centrifugal force and gravity through an opening in the floor of the twist sieve down into a bag filter. The fluid is filtered though the bag from the inside to the outside. Particles are retained and the cleaned emulsion flows into the buffer tank. The pressure shock ensures that the wire mesh (TopMesh) is flushed at every backflushing process, i.e. the twist sieve is self-cleaning and practically maintenance-free.

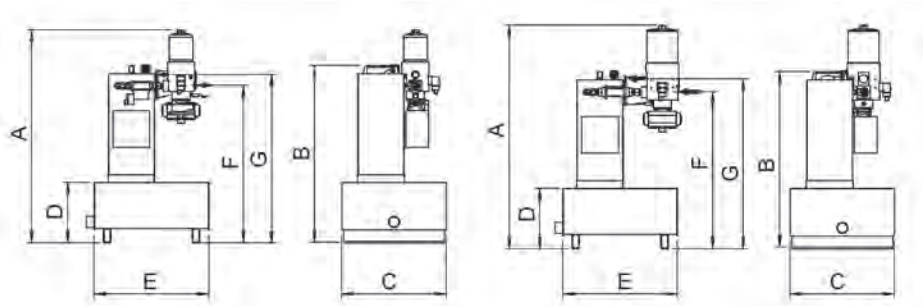

Type	A	B	C	D	E	F	G
BTU3 with RF3-CG	1162	972	570	330	626	860	917
BTU3 with RF3-0G	1223	972	570	330	626	860	929

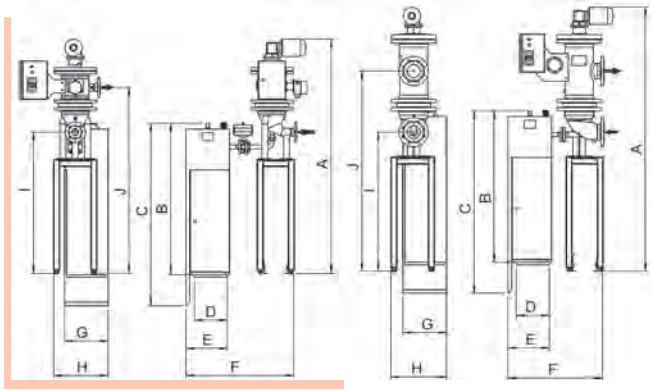

Type	A	B	C	D	E	F	G	H	I	J
BTU3 with RF3-CG	1877	1210	1460	264	332	867	350	437	1130	1488
BTU3 with RF3-0G	2113	1210	1460	264	332	760	350	446	1110	1600

Backflush Treatment Unit

Filter Model Number Selection

How to Build a Valid Model Number for a BTU:

BOX 1	BOX 2	BOX 3	BOX 4	BOX 5	BOX 6	BOX 7	BOX 8
BTU1							

Example: NOTE: One option per box

BOX 1	BOX 2	BOX 3	BOX 4	BOX 5	BOX 6	BOX 7	BOX 8	
BTU1	80	PP	50	EE	S	T	X	= BTU1-80-P-50-EE-S-T-X

BOX 1

Unit Type	
BTU1 =	Add-on unit
BTU3 =	Tank-top unit

BOX 2

Filtration Rating	
25 =	D25
40 =	D40
60 =	D60
80 =	D80
100 =	D100
150 =	D150

BOX 3

Bag Filter Material	
PE =	Polyester
PP =	Polypropylene
N =	Nylon

BOX 4

Bag Filter Filtration Rating	
25 =	25 µm
50 =	50 µm
100 =	100 µm
150 =	150 µm

BOX 5

Twist Sieve Housing/ Buffer Tank Material	
EE =	Housing and buffer tank: stainless steel
EN =	Housing: stainless steel; buffer tank: carbon steel
NN =	Housing and buffer tank: carbon steel
NE =	Housing: carbon steel; buffer tank: staniless steel
EEE =	Housing, buffer tank, filter frame: stainless steel

BOX 6

Control Functions	
0 =	Unit without control function
N1 =	Level monitoring of buffer tank
N2 =	Level monitoring of bag filter
N3 =	Level monitoring of buffer tank and bag filter
S =	Control complete

BOX 7

Pump	
0 =	150 psi (10 bar)
T =	Return pump in buffer tank (only possible with BTU1)

BOX 8

Modification Number	
X =	The latest version is always supplied

RF3 — RF3-8
RF5
RF7
RF10
RF4-1
RF4-2
RF4-3
RF12
BTU
BTU
ATF-1
ATF-2
ATF-2.5
ATF-3
ATF-3.5
ATF-4
PLF1
PLF2
PVD

BTU Backflush Treatment Unit

AutoFilt® Model Number Selection

How to Build a Valid Model Number for an AutoFilt® for BTU:

BOX 1	BOX 2	BOX 3	BOX 4	BOX 5	BOX 6	BOX 7	BOX 8
A							

Example: NOTE: One option per box

BOX 1	BOX 2	BOX 3	BOX 4	BOX 5	BOX 6	BOX 7	BOX 8	
A	E	1	E	E	E	2	L	= A-E-1-E-E-E-2-L

BOX 1

AutoFilt®	
A =	RF3-C
B =	RF3-CG
D =	RF3-0
E =	RF3-0G
F =	RF3-1
G =	RF4-1
H =	RF4-2

BOX 2

Control	
0 =	w/o
E =	EPT

BOX 3

Voltage			
RF3		RF4	
0 =	w/o control	M =	with control*; with solenoid valve 230 V AC
1 =	3x 400 V/N/PE, 50 Hz	N =	with control*; with solenoid valve 24 V DC
2 =	3x 400 V/X/PE, 50 Hz	O =	w/o control*; with solenoid valve 230 V AC
3 =	3x 500 V/X/PE, 50 Hz	P =	w/o control; with solenoid valve 24 V DC
4 =	3x 230 V/N/PE, 50 Hz		
5 =	3x 230 V/X/PE, 50 Hz		
6 =	3x 415 V/X/PE, 50 Hz		
7 =	3x 415 V/N/PE, 50 Hz		
8 =	3x 460 V/N/PE, 50 Hz		

BOX 4

Materials Of Housing (RF3 Only)	Materials Of Housing (RF4-1 Only)	Materials Of Housing (RF4-2 Only)
0 = Carbon steel, external primer ("N")	AA = Configuration (AAE): aluminum, aluminum, stainless steel	NN = Configuration (NNE): carbon steel, carbon steel, stainless steel
1 = Carbon steel, external primer, internal coating ("NM")	EE = Configuration (EEE): stainless steel, stainless steel, stainless steel	EE = Configuration (EEE): stainless steel, stainless steel, stainless steel
3 = Stainless steel ("E")		

BOX 5

Materials Of Backflushing Valve			
RF3		RF4	
N =	Carbon Steel	1 =	Coaxial Valve
E =	Stainless Steel	2 =	Ball Valve

BOX 6

Differential Pressure Gauge			
RF3		RF4	
1 =	Pressure Chamber Aluminum	F =	Fixed value: 0.5 bar
2 =	Pressure Chamber Stainless Steel	A =	Adjustable: 0.1 - 1.0 bar
3 =	With chemical seal/ Stainless Steel	G =	GW indicator, N/C

BOX 7

Flange Options (RF3 only)	
1 =	Filter outlet opposite filter inlet (standard) (not for RF3-C)
2 =	Filter outlet offset by 90° clockwise to standard
3 =	Filter outlet offset by 180° clockwise to standard

BOX 8

Filter Elements (RF3)	(RF4-1)	(RF4-2)
B = KD25	B = KMD25	B = KND25
C = KD40	C = KMD40	C = KND40
D = KD60	D = KMD60	D = KND60
E = KD80	E = KMD80	E = KND80
L = KS50	L = KMS50	L = KNS50
M = KS100	M = KMS100	M = KNS100
N = KS150	N = KMS150	N = KNS150

Process Twist Sieve Model Number Selection

How to Build a Valid Model Number for a Process Twist Sieve:

BOX 1	BOX 2	BOX 3	BOX 4	BOX 5	BOX 6	BOX 7	BOX 8	BOX 9
PTS								

Example: NOTE: One option per box

BOX 1	BOX 2	BOX 3	BOX 4	BOX 5	BOX 6	BOX 7	BOX 8	BOX 9	
PTS	40	250	E	L	2		50		= PTS-40-250-E-L-2-50

BOX 1

Unit Type	
PTS =	Process twist sieve

BOX 2

Filtration Rating	
25 =	D25
40 =	D40
60 =	D60
80 =	D80
100 =	D100
150 =	D150

BOX 3

Diameter	
180 =	Ø 180 mm (only for RF4, without)
180/1 =	Ø 180 mm (only for RF4-1, with bracket)
180/2 =	Ø 180 mm (only for RF4-2, with bracket)
250 =	Ø 250 mm (only for RF3-C and RF3-0)
450 =	Ø 450 mm (only for RF3-1)

BOX 4

Housing Material	
N =	Carbon steel, primed
E =	Stainless steel

BOX 5

Housing Length	
K =	Short (standard for PTS-180)
L =	Long (standard for PTS-250/-450)

BOX 6

Level Switch	
0 =	Without
1 =	With level switch stainless steel (only for diameters 250 mm, 450 mm)

BOX 7

Bag Filter Material	
PE =	Polyester
PP =	Polypropylene
N =	Nylon

BOX 8

Bag Filtration Rating	
25 =	25 µm
50 =	50 µm
100 =	100 µm
150 =	150 µm

BOX 9

Modification Number	
X =	The latest version is always supplied

RF3 — RF3-8
RF5
RF7
RF10
RF4-1
RF4-2
RF4-3
RF12
BTU
BTU
ATF-1
ATF-2
ATF-2.5
ATF-3
ATF-3.5
ATF-4
PLF1
PLF2
PVD

Automatic Twist Flow Strainer ATF

ATF

- Perfect pre-filter
- Great for high contamination levels
- Low pressure drop

Automatic Twist Flow Strainer

The Schroeder Automatic Twist Flow Strainer (ATF) is designed for the filtration of solid particles from water or fluids similar to water. With filtration ratings between 200 µm and 3,000 µm, the ATF is particularly well suited for separating suspended solid particles, up to several grams per liter, from low-viscosity fluids. In order to filter higher flow rates, the ATF can be supplied as a skid solution (call factory for details).

Construction and Function

This filter is a hybrid system consisting of a centrifugal separator and an inline filter. The fluid to be cleaned enters the housing tangentially, similar to a centrifugal separator, and accelerates down as a result of the tapered housing. The resulting spiral flow with its centrifugal force carries the coarsest contamination first (its density is obviously higher than that of the fluid) to the inner wall of the housing.

Filtration

When pressed against the filter wall, the higher density particles settle at a higher rate in the lower part of the filter, where they are finally carried out. The remaining smaller, less dense particles are filtered as the fluid passes through the element and exits the filter.

The conical filter element ensures optimum flow characteristics. On one hand it makes possible continual self-cleaning of the filter during operation. While on the other, it makes the pressure drop of the whole filter much lower than compared with a centrifugal separator of a similar size.

Cleaning Procedure

Both the sediment particles and those separated by the filter element finally collect at the bottom of the housing and are discharged periodically from the system by opening the contamination flap. During this cleaning procedure (depending on the installation of the ATF), part of the untreated fluid flow is used for a few seconds to flush the elements and clean the filter. Because partial flow is used, continuous filtration occurs.

In addition, the ATF is an excellent choice for bypass flow applications which are able to do without a partial flow for short periods of time.

Depending on the application and the amount of solid particles, the cleaning function can be adjusted via a timer function.

Special Features of the ATF

The ATF is well suited to high levels of contamination and large fluctuations in the solid particle content of the untreated water.

Due to the use of conical slotted tube and sintered wire meshes, a precise selectivity and therefore a constant filtrate quality is ensured – independent of fluctuations in operating pressure or flow rate.

Due to special flow conditions resulting from the element geometry and their arrangement, the pressure drop on the overall unit is relatively low at < 14.5 psi (1.0 bar).

Backflush Mode

Filtration Mode

The pre-filtration of solid particles of a higher density implies that the filter surface area can take a correspondingly higher load and the filter size can therefore be comparatively smaller.

Automatic Twist Flow Strainer ATF

The filter elements are cleaned solely by flushing with untreated fluid.

The ATF saves on space in comparison to conventional separating units, such as lamellar separators or sand filters.

Several ATF's can be integrated into systems, and as a result, can adapt to the required flow rates.

The filter element of the ATF is maintenance-friendly, as it is equipped with a flange cover. On sizes 2 to 4, it is also possible to replace the filter element without needing to open the filter.

Pressure Drop Graph

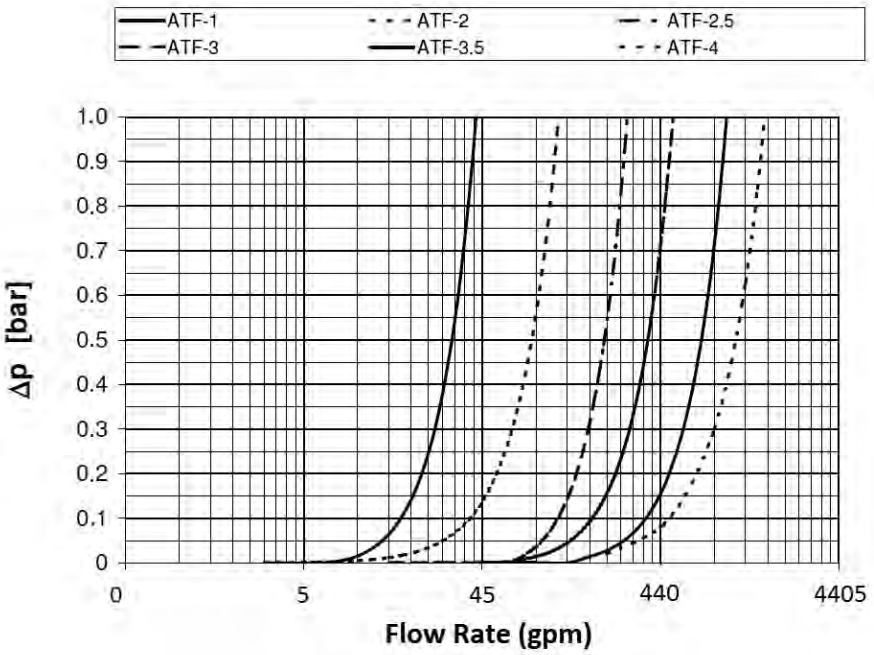

Filter Calculation and Sizing

The ATF is sized based on the pressure drop curve. A further factor in the calculation is the flow velocity through the inlet flange. It should not exceed 13.12 feet/minute (4 m/s).

In order to be able to size the ATF correctly, the following design data should be available:

- Flow rate
- Type of medium
- Materials / resistance
- Viscosity
- Required filtration rating
- Particulate loading in the fluid
- Solid particle type and density / densities
- Operating pressure
- Operating temperature

Industries Served

ATF

Automatic Twist Flow Strainer ATF-1

35 gpm
132 L/min

230 psi
16 bar

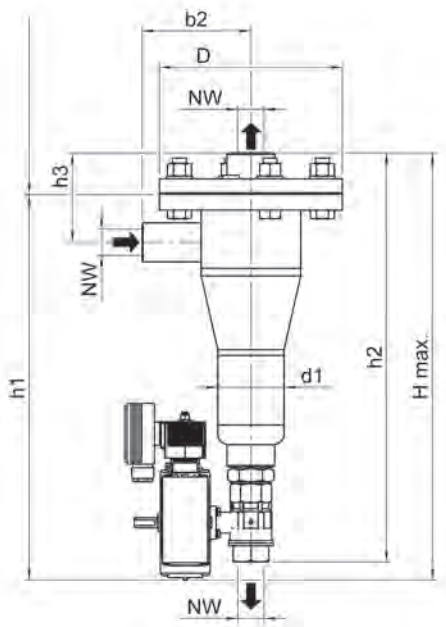

Filter Size	NW in (mm)	H Max. in (mm)	h1 in (mm)	h2 in (mm)	h3 in (mm)	b2 in (mm)	D in (mm)	d1 in (mm)	Installation Height in (mm)
ATF 1	0.04 (1)	19.29 (490)	17.52 (445)	18.50 (470)	4.06 (103)	4.92 (125)	8.27 (210)	3.00 (76.1)	13.78 (350)

Filter Housing Specifications

Filtration Rate:	**200-3000** µm slotted tube only
Operating Rate:	**32°F - 194°F (0°C - 90°C)**
Housing Material:	**Stainless Steel or Carbon Steel**
Size:	**1**
Flow Rate:	**8-35 gpm (30-132 L/m)**
Pressure Rating:	**230 psi (16 bar)**
Connections Inlet/Outlet:	**1" NPT (G 1")**
Connection Discharge Line:	**1" NPT (G 1")**
Filter Area:	**23 in² (150 cm²)**
Weight:	**33 lbs (15 kg)**
Volume:	**0.5 gal (1.8 L)**

Automatic Twist Flow Strainer ATF-1

How to Build a Valid Model Number for a ATF-1:

BOX 1	BOX 2	BOX 3	BOX 4	BOX 5	BOX 6	BOX 7	BOX 8	BOX 9	BOX 10	BOX 11
ATF										

Example: NOTE: One option per box

BOX 1	BOX 2	BOX 3	BOX 4	BOX 5	BOX 6	BOX 7	BOX 8	BOX 9	BOX 10	BOX 11	
ATF	1	EPZ	1	E	NN	10	0	X	UKS2	200	= ATF1EPZ1ENN100X-UKS2200

BOX 1

Filter Series

ATF

BOX 2

Size

1 = Inlet/Outlet 1" NPT

BOX 3

Control Type

0 = No controls/No valves
M = Manual valve
EP = Electro-pneumatic discharge valve, with timer control
EPZ = Electro-pneumatic discharge valve, with timer control
E = Electric discharge valve, without timer control
EZ = Electric discharge valve, with timer control

BOX 4

Voltage

1 = 230 VAC, 60 Hz, Single Phase
2 = 110VAC, 60 Hz, Single Phase
3 = 24VAC, 60 Hz, Single Phase
4 = 24VDC
Omit if no control type specified

BOX 5

Housing Material

N = Carbon Steel
E = Stainless Steel
A = for ANSI flanges, also add A
J = for JIS flanges, also add J
T = NPT thread (size 1 only), also add T
P = Internal Coating with 2-K polyurethane paint, also add P

BOX 6

Discharge Valve

0 = None
NN = Butterfly valve, cast housing coated, disc Stainless Steel, cuff BR (not available on size 1)
NE = Butterfly valve, cast housing coated, disc Stainless Steel, cuff EPDM (not available on size 1)
NV = Butterfly valve, cast housing coated disc Stainless Steel, cuff Viton (not available on size 1)
BN = Butterfly valve, cast housing coated, disc Bronze, cuff NBR (not available on size 1)
BE = Butterfly valve, cast housing caoted, disc Bronze, cuff EPDM (not available on size 1)
BV = Butterfly valve, cast housing coated, disc Bronze, cuff Viton (not available on size 1)
E = Ball valve Stainless Steel (size 1 only)
M = Ball valve brass (size 1 only)

BOX 7

Pressure Rating

10 = 145 psi (10 bar)
16 = 230 psi (16 bar)

BOX 8

Accessories

0 = None
1 = Base frame (size 2, 2.5 and 3 only)
2 = Mounting clips (size 2, 2.5 and 3 only)
3 = Differential pressure gauge in aluminum (fitted to customer's equipment)
4 = Differential pressure gauge in stainless steel (fitted to customer's equipment)
5 = Differential pressure gauge in brass (fitted to customer's equipment)

BOX 9

Modification Number

X = Latest version supplied by factory

BOX 10

Element Set

UKS1 = Conical Slotted Tube for size 1
UKS2 = Conical Slotted Tube for size 2
UKS2.5 = Conical Slotted Tube for size 2.5
UKS3 = Conical Slotted Tube for size 3
UKS3.5 = Conical Slotted Tube for size 3.5
UKS4 = Connical Slotted Tube for size 4

BOX 11

Filtration Rating

200 = 200 µm (not for size 4)
300 = 300 µm (not for size 4)
500 = 500 µm
1000 = 1000 µm
2000 = 2000 µm
3000 = 3000 µm

RF3 — RF3-8
RF5
RF7
RF10
RF4-1
RF4-2
RF4-3
RF12
RF14
ATF-1
ATF-1
ATF-2
ATF-2.5
ATF-3
ATF-3.5
ATF-4
PLF1
PLF2
PVD

ATF

Automatic Twist Flow Strainer ATF-2, ATF-2.5, ATF-3

480 gpm
1816 L/min

230 psi
16 bar

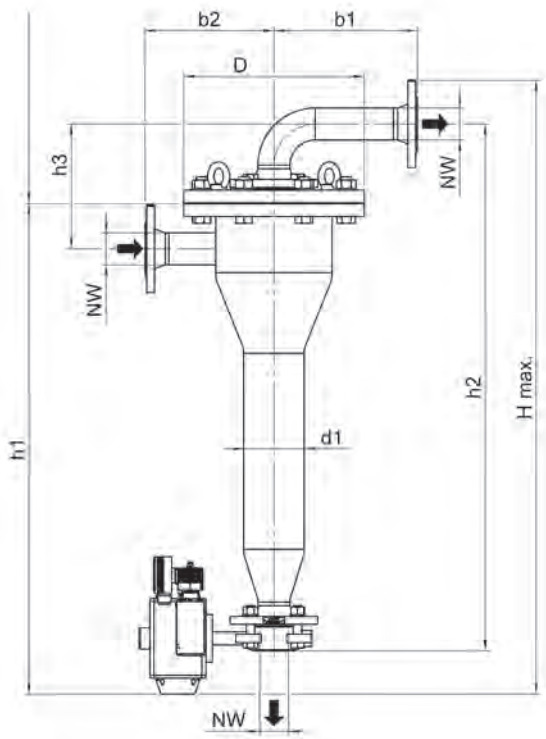

Filter Size	NW in (mm)	H Max. in (mm)	h1 in (mm)	h2 in (mm)	h3 in (mm)	b1 in (mm)	b2 in (mm)	D in (mm)	d1 in (mm)	Installation Height in (mm)
ATF 2	1.97 (50)	45.67 (1160)	36.42 (925)	39.17 (995)	9.25 (235)	10.63 (270)	9.57 (243)	13.39 (340)	4.50 (114.3)	19.69 (500)
ATF 2.5	3.15 (80)	56.50 (1435)	44.88 (1140)	48.62 (1235)	12.40 (315)	8.66 (10.24)	11.02 (280)	15.55 (395)	5.50 (139.7)	25.59 (650)
ATF 3	3.94 (100)	68.90 (1750)	55.12 (1400)	59.06 (1500)	13.78 (350)	10.24 (260)	12.68 (322)	17.52 (445)	8.63 (219.1)	39.37 (1000)

Filter Housing Specifications

Filtration Rate:	**200-3000** µm slotted tube only		
Operating Rate:	**32°F - 194°F (0°C - 90°C)**		
Housing Material:	**Stainless Steel or Carbon Steel**		
Size:	**2**	**2.5**	**3**
Flow Rate:	**20-110 gpm (75-416 L/m)**	**65-260 gpm (246-984 L/m)**	**85-480 gpm (321-1816 L/m)**
Pressure Rating:	**145 or 230 psi (10 or 16 bar)**	**145 or 230 psi (10 or 16 bar)**	**145 or 230 psi (10 or 16 bar)**
Connections Inlet/ Outlet:	**2" Flange (DN 50)**	**3" Flange (DN 80)**	**4" Flange (DN 100)**
Connection Discharge Line:	**2" Flange (DN 50)**	**3" Flange (DN 80)**	**4" Flange (DN 100)**
Filter Area:	**55 in² (360 cm²)**	**150 in² (966 cm²)**	**266 in² (1720 cm²)**
Weight:	**132 lbs (60 kg)**	**297 lbs (135 kg)**	**440 lbs (200 kg)**
Volume:	**3.5 gal (13.5 L)**	**7.4 gal (28 L)**	**14.5 gal (55 L)**

Automatic Twist Flow Strainer ATF-2, ATF-2.5, ATF-3

How to Build a Valid Model Number for a ATF-2, 2.5 and 3:

BOX 1	BOX 2	BOX 3	BOX 4	BOX 5	BOX 6	BOX 7	BOX 8	BOX 9	BOX 10	BOX 11
ATF										

Example: NOTE: One option per box

BOX 1	BOX 2	BOX 3	BOX 4	BOX 5	BOX 6	BOX 7	BOX 8	BOX 9	BOX 10	BOX 11	
ATF	2	EPZ	1	E	NN	10	0	X	UKS2	200	= ATF2EPZ1ENN100X-UKS2200

BOX 1

Filter Series

ATF

BOX 2

Size

- 2 = Inlet/outlet 2" ANSI flange
- 2.5 = Inlet/outlet 3" ANSI flange
- 3 = Inlet/outlet 4" ANSI flange

BOX 3

Control Type

- 0 = No controls/No valves
- M = Manual valve
- EP = Electro-pneumatic discharge valve, with timer control
- EPZ = Electro-pneumatic discharge valve, with timer control
- E = Electric discharge valve, without timer control
- EZ = Electric discharge valve, with timer control

BOX 4

Voltage

- 1 = 230 VAC, 60 Hz, Single Phase
- 2 = 110VAC, 60 Hz, Single Phase
- 3 = 24VAC, 60 Hz, Single Phase
- 4 = 24VDC

Omit if no control type specified

BOX 5

Housing Material

- N = Carbon Steel
- E = Stainless Steel
- A = for ANSI flanges, also add A
- J = for JIS flanges, also add J
- T = NPT thread (size 1 only), also add T
- P = Internal Coating with 2-K polyurethane paint, also add P

BOX 6

Discharge Valve

- 0 = None
- NN = Butterfly valve, cast housing coated, disc Stainless Steel, cuff BR (not available on size 1)
- NE = Butterfly valve, cast housing coated, disc Stainless Steel, cuff EPDM (not available on size 1)
- NV = Butterfly valve, cast housing coated disc Stainless Steel, cuff Viton (not available on size 1)
- BN = Butterfly valve, cast housing coated, disc Bronze, cuff NBR (not available on size 1)
- BE = Butterfly valve, cast housing caoted, disc Bronze, cuff EPDM (not available on size 1)
- BV = Butterfly valve, cast housing coated, disc Bronze, cuff Viton (not available on size 1)
- E = Ball valve Stainless Steel (size 1 only)
- M = Ball valve brass (size 1 only)

BOX 7

Pressure Rating

- 10 = 145 psi (10 bar)
- 16 = 230 psi (16 bar)

BOX 8

Accessories

- 0 = None
- 1 = Base frame (size 2, 2.5 and 3 only)
- 2 = Mounting clips (size 2, 2.5 and 3 only)
- 3 = Differential pressure gauge in aluminum (fitted to customer's equipment)
- 4 = Differential pressure gauge in stainless steel (fitted to customer's equipment)
- 5 = Differential pressure gauge in brass (fitted to customer's equipment)

BOX 9

Modification Number

- X = Latest version supplied by factory

BOX 10

Element Set

- UKS1 = Conical Slotted Tube for size 1
- UKS2 = Conical Slotted Tube for size 2
- UKS2.5 = Conical Slotted Tube for size 2.5
- UKS3 = Conical Slotted Tube for size 3
- UKS3.5 = Conical Slotted Tube for size 3.5
- UKS4 = Connical Slotted Tube for size 4

BOX 11

Filtration Rating

- 200 = 200 µm (not for size 4)
- 300 = 300 µm (not for size 4)
- 500 = 500 µm
- 1000 = 1000 µm
- 2000 = 2000 µm
- 3000 = 3000 µm

RF3 — RF3-8
RF5
RF7
RF10
RF4-1
RF4-2
RF4-3
RF12
RF14
BTU
ATF-2
ATF-2.5
ATF-3
ATF-3
ATF-3.5
ATF-4
PLF1
PLF2
PVD

ATF

Automatic Twist Flow Strainer ATF-3.5, ATF-4

1760 gpm
6662 L/min

230 psi
16 bar

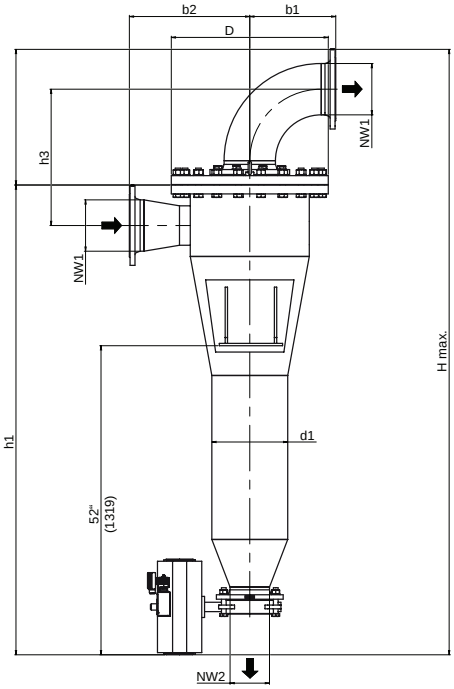

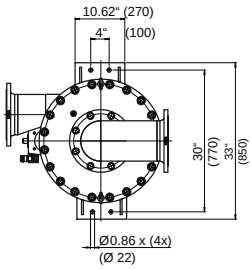

Filter Size	NW1 in (mm)	NW2 in (mm)	H Max. in (mm)	h1 in (mm)	h2 in (mm)	h3 in (mm)	b1 in (mm)	b2 in (mm)	D in (mm)	d1 in (mm)	Installation Height in (mm)
ATF 3.5	5.91 (150)	3.94 (100)	88.98 (2260)	70.28 (17.85)	77.95 (1980)	18.82 (478)	11.18 (284)	17.13 (435)	22.24 (565)	10.75 (273)	51.18 (1300)
ATF 4	7.87 (200)	5.91 (150)	101.77 (2585)	78.94 (2005)	88.19 (2240)	22.91 (582)	14.45 (367)	20.24 (514)	26.38 (670)	12.75 (323.9)	40.06 (1170)

Filter Housing Specifications

Filtration Rate:	**200-3000** µm slotted tube only	
Operating Rate:	**32°F - 194°F (0°C - 90°C)**	
Housing Material:	**Stainless Steel or Carbon Steel**	
Size:	**3.5**	**4**
Flow Rate:	**350-965 gpm (1324-3652 L/m)**	**440-1760 gpm (1665-6662 L/m)**
Pressure Rating:	**145 or 230 psi (10 or 16 bar)**	**145 or 230 psi (10 or 16 bar)**
Connections Inlet/Outlet:	**6" Flange (DN 150)**	**8" Flange (DN 200)**
Connection Discharge Line:	**4" Flange (DN 100)**	**6" Flange (DN 150)**
Filter Area:	**540 in² (3500 cm²)**	**605 in² (3900 cm²)**
Weight:	**578 lbs (263 kg)**	**920 lbs (418 kg)**
Volume:	**34 gal (130 L)**	**60 gal (230 L)**

Automatic Twist Flow Strainer ATF-3.5, ATF-4

RF3 — RF3-8
RF5
RF7
RF10
RF4-1
RF4-2
RF4-3
RF12
RF14
BTU
ATF-1
ATF-2
ATF-2.5
ATF-3.5
ATF-4
ATF-4
PLF1
PLF2
PVD

How to Build a Valid Model Number for a ATF-3.5, 4:

BOX 1	BOX 2	BOX 3	BOX 4	BOX 5	BOX 6	BOX 7	BOX 8	BOX 9	BOX 10	BOX 11
ATF										

Example: NOTE: One option per box

BOX 1	BOX 2	BOX 3	BOX 4	BOX 5	BOX 6	BOX 7	BOX 8	BOX 9	BOX 10	BOX 11	
ATF	3.5	EPZ	1	E	NN	10	0	X	UKS2	200	=ATF3.5EPZ1ENN100X-UKS2200

BOX 1

Filter Series

ATF

BOX 2

Size

3.5 = Inlet/outler 6" ANSI flange
4 = Inlet/outlet 8" ANSI flange

BOX 3

Control Type

0 = No controls/No valves
M = Manual valve
EP = Electro-pneumatic discharge valve, with timer control
EPZ = Electro-pneumatic discharge valve, with timer control
E = Electric discharge valve, without timer control
EZ = Electric discharge valve, with timer control

BOX 4

Voltage

1 = 230 VAC, 60 Hz, Single Phase
2 = 110VAC, 60 Hz, Single Phase
3 = 24VAC, 60 Hz, Single Phase
4 = 24VDC
Omit if no control type specified

BOX 5

Housing Material

N = Carbon Steel
E = Stainless Steel
A = for ANSI flanges, also add A
J = for JIS flanges, also add J
T = NPT thread (size 1 only), also add T
P = Internal Coating with 2-K polyurethane paint, also add P

BOX 6

Discharge Valve

0 = None
NN = Butterfly valve, cast housing coated, disc Stainless Steel, cuff BR (not available on size 1)
NE = Butterfly valve, cast housing coated, disc Stainless Steel, cuff EPDM (not available on size 1)
NV = Butterfly valve, cast housing coated disc Stainless Steel, cuff Viton (not available on size 1)
BN = Butterfly valve, cast housing coated, disc Bronze, cuff NBR (not available on size 1)
BE = Butterfly valve, cast housing caoted, disc Bronze, cuff EPDM (not available on size 1)
BV = Butterfly valve, cast housing coated, disc Bronze, cuff Viton (not available on size 1)
E = Ball valve Stainless Steel (size 1 only)
M = Ball valve brass (size 1 only)

BOX 7

Pressure Rating

10 = 145 psi (10 bar)
16 = 230 psi (16 bar)

BOX 8

Accessories

0 = None
1 = Base frame (size 2, 2.5 and 3 only)
2 = Mounting clips (size 2, 2.5 and 3 only)
3 = Differential pressure gauge in aluminum (fitted to customer's equipment)
4 = Differential pressure gauge in stainless steel (fitted to customer's equipment)
5 = Differential pressure gauge in brass (fitted to customer's equipment)

BOX 9

Modification Number

X = Latest version supplied by factory

BOX 10

Element Set

UKS1 = Conical Slotted Tube for size 1
UKS2 = Conical Slotted Tube for size 2
UKS2.5 = Conical Slotted Tube for size 2.5
UKS3 = Conical Slotted Tube for size 3
UKS3.5 = Conical Slotted Tube for size 3.5
UKS4 = Connical Slotted Tube for size 4

BOX 11

Filtration Rating

200 = 200 µm (not for size 4)
300 = 300 µm (not for size 4)
500 = 500 µm
1000 = 1000 µm
2000 = 2000 µm
3000 = 3000 µm

PLF1 Process Inline Filter

145 psi
10 bar
Or
230 psi
16 bar

Part of the Schroeder Industries 2030 Initiative

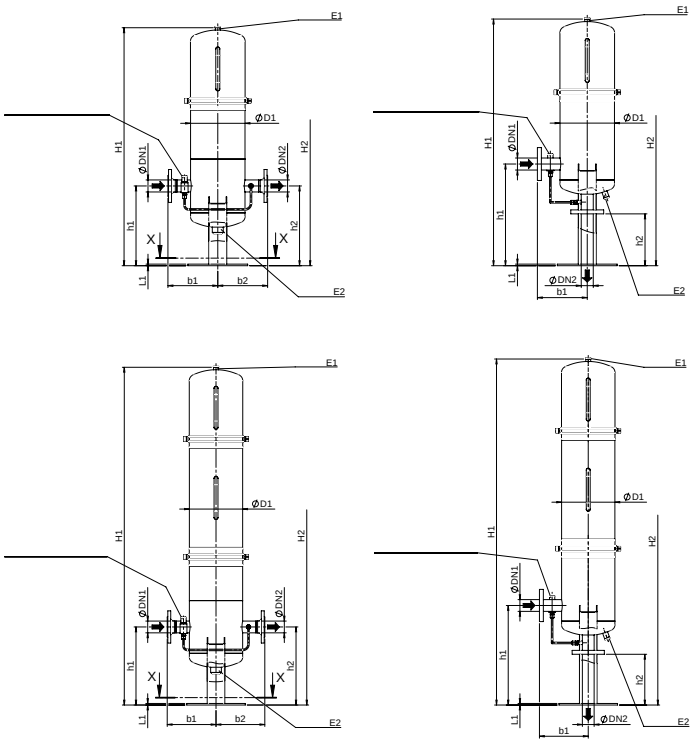

NOTES:
1. Top row represents the 10 bar version | In-line (1-stage). Bottom row represents the 10 bar version | In-line (2-stage)
2. Drawings of the 16 bar versions, both 1-stage and 2-stage, are also available upon request.

Filter Size	NW1 in (mm)	NW2 in (mm)	H Max. in (mm)	h1 in (mm)	h2 in (mm)	h3 in (mm)	b1 in (mm)	b2 in (mm)	D in (mm)	d1 in (mm)	Installation Height in (mm)
1-stage	5.91 (150)	3.94 (100)	88.98 (2260)	70.28 (17.85)	77.95 (1980)	18.82 (478)	11.18 (284)	17.13 (435)	22.24 (565)	10.75 (273)	51.18 (1300)
2-stage	7.87 (200)	5.91 (150)	101.77 (2585)	78.94 (2005)	88.19 (2240)	22.91 (582)	14.45 (367)	20.24 (514)	26.38 (670)	12.75 (323.9)	40.06 (1170)

Filter Housing Specifications

Filtration Rate:	**1-90** µm
Operating Rate:	**32°F - 194°F (0°C - 90°C)**
Housing Material:	**Stainless Steel - E1 and E2**
Flow Rate:	**881 gpm (4003 L/min)**
Pressure Rating:	**145 or 230 psi (10 or 16 bar)**
Connections Inlet/Outlet:	**6" Flange (DN 150)**
Connection Discharge Line:	**G1" In-Line Version G1/2" Outlet Version Downward**
Filter Area:	**Contact Factory**
Weight:	**132 lbs (60 kg)**
Volume:	**13 gal (50 L)**

Filter Model Number Selection

How to Build a Valid Model Number for a PLF1:

BOX 1	BOX 2	BOX 3	BOX 4	BOX 5	BOX 6	BOX 7	BOX 8	BOX 9	BOX 10	BOX 11	BOX 12	BOX 13
PLF1												

Example: NOTE: One option per box

BOX 1	BOX 2	BOX 3	BOX 4	BOX 5	BOX 6	BOX 7	BOX 8	BOX 9	BOX 10	BOX 11	BOX 12	BOX 13	
PLF1	1	2	9HF	V	E1	S	C	E1	10	N	1	0	=PLF1-129HF-VE1SCE110N10

BOX 1

Filter Series

PLF1

BOX 2

Filter Size

1 = For 9" High Flow or High Load Cascade filter elements

2 = For High Flow filter elements

BOX 3

Filter Housing Length

1 = Single-Stage

2 = Double-Stage

BOX 4

Element Type

6HF = 6" Filter element diameter High Flow

9HF = 9" Filter element diameter High Flow

9HLC = 9" filter element diameter

BOX 5

Filter Orientation

V = Vertical

H = Horizontal

BOX 6

Housing Material

E1 = Stainless Steel 1.4301

E2 = Stainless Steel 1.4571

SD = Superduplex

D = Duplex

A = w/ ANSI flanges "A" - readjusted additionally

J = w/ JIS flanges "J"- readjusted additionally

BOX 7

Design Code

S = Schroeder Standard

A = ASME VIII Div. 1

U = ASME VIII Div. 1 stamped

E = EN 13445

BOX 8

Connection Code

G2 = Thread G2"(size 2 only)

C = DIN DN 50 / 2" ANSI

E = DIN DN 80 / 3" ANSI (size 1 only)

F = DIN DN 100 / 4" ANSI (size 1 only)

K = DIN DN 150 / 6" ANSI (size 1 only)

BOX 9

Internal Parts

E1 = Stainless steel 1.4301 or similar material (group 304)

E2 = Stainless steel 1.4571 or similar material (group 316)

SD = Superduplex (on request)

D = Duplex (on request)

BOX 10

Pressure Ranges

10 = PN 10

16 = PN 16

BOX 11

Seal Material

N = NBR

V = FPM (Viton)[1]

E = EPDM

BOX 12

Accessories

0 = w/o

1 = w/ visual CI (PVD 2B.1)

2 = w/ visual-electric CI (PVD 2D.0/-L24)

3 = V01

4 = Differential pressure gauge aluminum w/ 2 adjustable switching contacts

5 = Differential pressure gauge stainless steel w/ 2 adjustable switching contacts

6 = w/ electric CI (PVD 2C.0_

7 = PVL2GW.0/-V-110

8 = PVL2GW.0/-V-120

BOX 13

Optional Fitting

3 = Air-bleed valve made of stainless steel

4 = Ball valve for draining

5 = Flange

6 = Clamp connection

7 = Special industrial part washers design (TRA)

8 = Including solenoid technology

9 = Height adjustable 3 legged base design for PLF1-2-6HF TRA (Option 7)

[1]For reservoirs made of stainless steel 1.4571 or similar material (group 316), use NBR or EPDM sealing material preferably

RF3 — RF3-8
RF5
RF7
RF10
RF4-1
RF4-2
RF4-3
RF12
RF14
BTU
ATF-1
ATF-2
ATF-2.5
ATF-3
ATF-3.5
PLF1
PLF1
PLF2
PVD

PLF2 Process Inline Filter

Max. 232 psi
16 bar

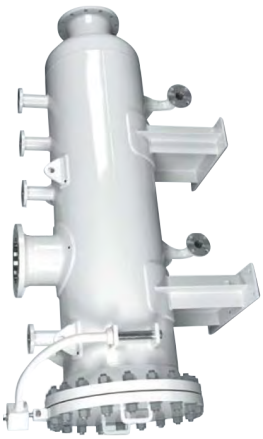

Filter Housing, two-part, carbon steel

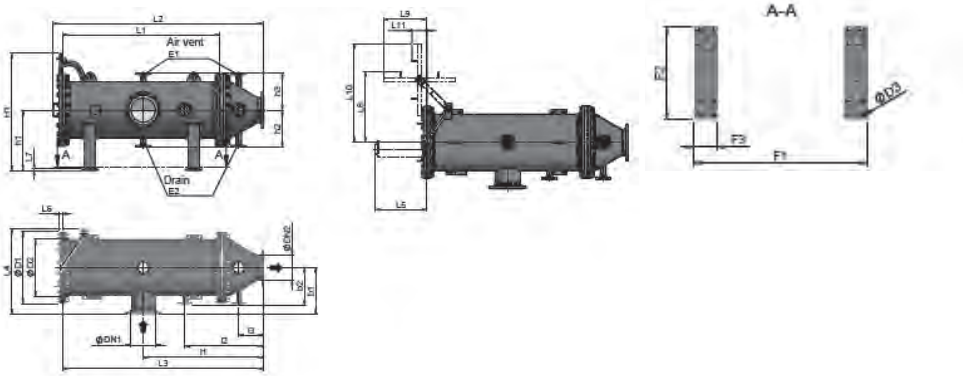

Filter Housing, one-part, stainless steel

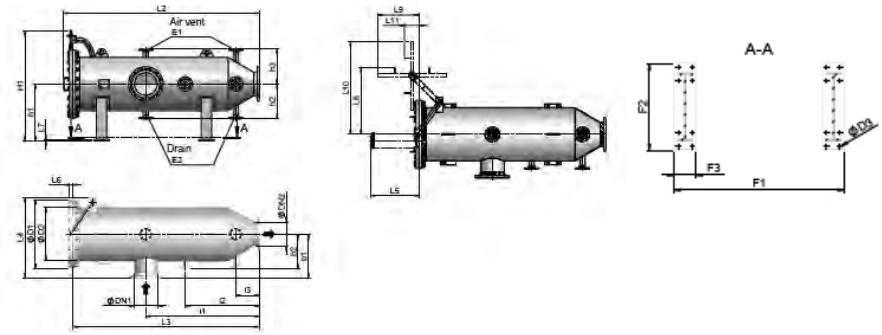

NOTES:
1. The dimensions indicated have ± 10 mm tolerances.
2. Subject to technical modifications.

Contact Factory for Dimensional Drawing.

Filter Housing Specifications

Filtration Rate:	**1-90** µm
Operating Rate:	**Carbon 33°F - 140°F (1°C - 60°C)** **Stainless 33°F - 194°F (1°C - 90°C)**
Housing Material:	**Stainless Steel** **Carbon Steel**
Flow Rate Q max:	**5150 gpm (1170 m³/h)**
Pressure Rating:	**87 or 145 or 230 psi** **(6 or 10 or 16 bar)**
Connections Inlet/Outlet:	**6" - 16" Flange** **(150-400 DIN)**
Connection Discharge Line:	**G1" In-Line Version** **G1/2 Outlet Version Downward** **2" (DN50)**
Filter Area:	**Contact Factory**
Weight:	**Contact Factory**
Volume:	**Up to 350 gal (1330 L)**

How to Build a Valid Model Number for a PLF2:

BOX 1	BOX 2	BOX 3	BOX 4	BOX 5	BOX 6	BOX 7	BOX 8	BOX 9	BOX 10	BOX 11	BOX 12	BOX 13	BOX 14	BOX 15
PLF2 –	–	–	–	–	–	–	–	–	–	–	–	–	–	–

Example: NOTE: One option per box

BOX 1	BOX 2	BOX 3	BOX 4	BOX 5	BOX 6	BOX 7	BOX 8	BOX 9	BOX 10	BOX 11	BOX 12	BOX 13	BOX 14	BOX 15
PLF2 –	3 –	3 –	6HF –	H –	E1 –	S –	L –	E1 –	10 –	C –	1 –	1 –	0 –	So

PLF2-336HF-HE1SL-E1SLE110-C100-So

BOX 1

Indicator Code	
PLF2 =	Multiple-place filter housing

BOX 2

Size of Filter	
3 =	3 Support Tubes
5 =	5 Support Tubes
7 =	7 Support Tubes
10 =	10 Support Tubes
13 =	13 Support Tubes

BOX 3

Length of Filter Housing	
1 =	1-stage (on request)
2 =	2-stage (on request)
3 =	3-stage

BOX 4

Filter Element Diameter and Filter Element Type	
6HF =	6" filter element diameter HighFlow (HF)

BOX 5

Filter Alignment	
H =	Horizontal
V =	Vertical (on request)

BOX 6

Housing Material	
NP =	Carbon steel, 2-comp. PUR internal coating
V =	Carbon steel, 3 mm rubber lining (on request)
E1 =	Stainless steel 1.4301 / 1.4541 or similar (Group 304 / 321)
E2 =	Stainless steel 1.4571 or similar (Group 316)
SD =	Super Duplex (on request)
D =	Duplex (on request)
A =	For ANSI flanges, add suffix "A"
J =	For JIS flanges, add suffix "J"

BOX 7

Design Code	
S =	HYDAC Standard (AD 2000)
A =	ASME VIII Div. 1 (material and calculation...)
U =	ASME VIII Div. 1 Stamped
E =	EN 13445

BOX 8

Type of Connection	
Connection Size	Filter Size 6"
L = DIN DN 200 / 8" ASME	3
M = DIN DN 250 / 10" ASME	5
N = DIN DN 300 / 12" ASME	7
Q = DIN DN 400 / 16" ASME	10/13

BOX 9

Material of Internal Parts	
E1 =	stainless steel 1.4301 or similar (Group 304)
E2 =	stainless steel 1.4571 or similar (Group 316)
SD =	Super Duplex (on request)
D =	Duplex (on request)

BOX 10

Pressure Ranges	
6 =	PN 6
10 =	PN 10
16 =	PN 16

BOX 11

Sealing Material	
C =	Asbestos-free gasket
N =	NBR
V =	FKM (Viton)
E =	EPDM

BOX 12

Clogging Indicator	
0 =	Without clogging indicator
1 =	Visual indicator (PVD 2B.1)
2 =	Visual-electrical indicator (PVD 2D.0/-L24)
3 =	V01
4 =	Differential pressure gauge in aluminum with 2 adjustable switching contacts
5 =	Differential pressure gauge in stainless steel with 2 adjustable switching contacts
6 =	Electrical indicator (PVD 2C.0)
7 =	PVL2GW.0/-V-110
8 =	PVL2GW.0/-V-120

BOX 13

Optional Equipment	
1 =	Pivoting lid device (only for horizontal variant) / davit (only for vertical variant)
2 =	Toggle screws
3 =	Stainless steel air vent ball valve
4 =	Drain flap DN 50

(Multiple fittings possible, please provide the corresponding number combination)

BOX 14

Modification Number
0

BOX 15

Supplementary Details	
So =	Code number for special equipment

[1]For reservoirs made of stainless steel 1.4571 or similar material (group 316), use NBR or EPDM sealing material preferably

PVD Clogging Indicators for Process Filters

0-6092 psi
0-420 bar

General
The PVD Clogging Indicators for Process Filters are designed to indicate visually and/or electronically when the filter elements must be cleaned or changed. The use of clogging indicators guarantees both the operational safety of the system and the efficient utilization of the filter elements.

Seals
V (=Viton) or T (=FEP encapsulated)

Construction
Differential pressure indicators are used on all process filters. They react to the pressure differential between the filter inlet and filter outlet, which rises as the level of contamination in the element increases.

Simplest fitting of the differential pressure indicator:
G1/2" cavity
(acc. Schroeder's works standard HN 28-22)

The differential pressure indicator type V01 is piped up separately.

For duplex filter housings, the differential pressure indicators and connected using an adapter block.

Special Indicators
Electrical ATEX indicators:
Optional: electrical indicator for process filters for use in potentially explosive atmospheres subject to the ATEX equipment directive 94/9/EC and the ATEX operator directive 1999/92/EC.

Torque Values - Differential Pressure Indicators
Note: The clogging indicators must only be tightened or adjusted on the spanner flats.

- PVD..B.1: SW27
- PVD..C.0: SW30
- PVD..D.0/L...: SW30

max. torque value: 100 Nm

Clogging Indicators According To Filter Type

Type	Filter Types				
	PRFL PRFLD	PRFS PRFSD	PFM PFH	EDF	PMRF PMRFD
PVD ..B	•	•	•	•	•
PVD ..C	•	•	•	•	•
PVD ..D	•	•	•	•	•
V01 ..VZ	•	•	On Request		•
Differential Pressure Gauge	•	•	On Request		•

Clogging Indicators for Process Filters

PVD x B.x

Type Of Indication:	Visual, red/green band Automatic reset
Weight:	110 g
Cracking Pressure Or Indication Range:	1 bar ± 10% 3 bar ± 10% 1.5 bar ± 10% 5 bar ± 10% 2 bar ± 10% 8 bar ± 10%
Perm. Operating Pressure:	6092 psi (420 bar)
Perm. Temperature Range:	-20°C to 100°C
Thread:	G 1/2
Max. Torque Value:	100 Nm
Switching Type:	-
Max. Switching Voltage:	-
Electrical Connection:	-
Max. Switching Voltage At Resistive Load:	-
Switching Capacity:	-
Protective Class Acc. DIN 40050:	-

PVD x C.x

Type Of Indication:	Electrical switch
Weight:	220 g
Cracking Pressure Or Indication Range:	1 bar ± 10% 3 bar ± 10% 1.5 bar ± 10% 5 bar ± 10% 2 bar ± 10% 8 bar ± 10%
Perm. Operating Pressure:	6092 psi (420 bar)
Perm. Temperature Range:	-20°C to 100°C
Thread:	G 1/2
Max. Torque Value:	100 Nm
Switching Type:	N/C or N/O (change-over contacts)
Max. Switching Voltage:	230 V
Electrical Connection:	Male Connection M20x1.5 acc. EN 50262 Female Connector acc. DIN 43650
Max. Switching Voltage At Resistive Load:	60 W = 100 VA ~
Switching Capacity:	Ohmic 3 A at 24 V = Ohmic 0.03 to 5 A at max. 230 V ~
Protective Class Acc. DIN 40050:	IP 65 (only if the connector is wired and fitted correctly)

PVD x D.x / -L

Type Of Indication:	Visual indicator and electrical switch
Weight:	250 g
Cracking Pressure Or Indication Range:	1 bar ± 10% 3 bar ± 10% 1.5 bar ± 10% 5 bar ± 10% 2 bar ± 10% 8 bar ± 10%
Perm. Operating Pressure:	6092 psi (420 bar)
Perm. Temperature Range:	-20°C to 100°C
Thread:	G 1/2
Max. Torque Value:	100 Nm
Switching Type:	N/C or N/O (change-over contacts)
Max. Switching Voltage:	24, 48, 110, 230 V depending on the light insert
Electrical Connection:	Male Connection M20x1.5 acc. EN 50262 Female Connector acc. DIN 43650
Max. Switching Voltage At Resistive Load:	60 W = 100 VA ~
Switching Capacity:	Ohmic 3 A at 24 V = Ohmic 0.03 to 5 A at max. 230 V ~
Protective Class Acc. DIN 40050:	IP 65 (only if the connector is wired and fitted correctly)

RF3 — RF3-8
RF5
RF7
RF10
RF4-1
RF4-2
RF4-3
RF12
RF14
BTU
ATF-1
ATF-2
ATF-2.5
ATF-3
ATF-3.5
ATF-4
PLF1
PVD
PVD

Clogging Indicators for Process Filters

V01 x VZ.x

Type Of Indication:	Visual/analogue indicator and 1 electrical switching contact at 75% and 100% of the cracking pressure
Weight:	650 g
Cracking Pressure Or Indication Range:	0.8 bar ± 10% 2.0 bar ± 10% 4.3 bar ± 10%
Perm. Operating Pressure:	2321 psi (160 bar)
Perm. Temperature Range:	-20°C to 100°C
Thread:	G 1/4
Max. Torque Value:	-
Switching Type:	75% - N/O contact 100% - N/C contact
Max. Switching Voltage:	250 V
Electrical Connection:	Threaded connection M20x1.5 acc. EN 50262
Max. Switching Voltage At Resistive Load:	75% contact: 120 W = / 120 VA ~ 100% contact: 30 W = / 60 VA ~
Switching Capacity:	Ohmic 2.5 A at 24 V Ohmic 1 A at 250 V
Protective Class Acc. DIN 40050:	IP 55

DS11

Type Of Indication:	2 microswitches, 1-pole change-over contacts, can be adjusted manually to recommended set values
Weight:	1.2 - 3.5 kg
Cracking Pressure Or Indication Range:	0 - 1.6 bar 0 - 4 bar on request
Perm. Operating Pressure:	363 psi (25 bar); *580 psi (40 bar) on request*
Perm. Temperature Range:	-10°C to 100°C
Thread:	G 1/4
Max. Torque Value:	-
Switching Type:	Change-over contacts
Max. Switching Voltage:	U~max = 250 V AC U~max = 3- V DC
Electrical Connection:	Hard-wired numbered cable, cable connector, 7 pole plug-in connection
Max. Switching Voltage At Resistive Load:	Imax = 5 A, Pmax = 250VA, Imax = 0.4 A, Pmax = 10 W
Switching Capacity:	-
Protective Class Acc. DIN 40050:	IP 55

Clogging Indicators for Process Filters

Filter Model Number Selection

How to Build a Valid Model Number for a BTU:

BOX 1	BOX 2	BOX 3	BOX 4	BOX 5
PVD				

Example: NOTE: One option per box

BOX 1	BOX 2	BOX 3	BOX 4	BOX 5	
PVD	2	D.	0	-L24	= PVD-2-D.-0 / -L24

BOX 1

Unit Type	
PVD =	Clogging indicator
V01 =	Clogging indicator

BOX 2

Cracking Pressure	
0.8 =	+0.8 bar (only for V01 indicator)
1 =	+1 bar (PVD indicator)
1.5 =	+1.5 bar (PVD indicator)
2 =	+2 bar (all clogging indicators)
3 =	+3 bar (PVD indicator)
4.3 =	+4.3 bar (only for V01 indicator)
5 =	+5 bar (only for PVD indicator)
8 =	+8 bar (only for PVD indactor)

BOX 3

Clogging Indicator	
B. =	Visual indicator with automatic reset
C. =	Electrical indicator
D. =	Visual/electrical indicator
VZ. =	Visual/analogue indicator with 75% and 100% switch contacts

BOX 4

Modification Number	
0 =	All clogging indicators
1 =	Only B. type

BOX 5

Supplementary Details (only PVD)	
-L24 =	Light with 24 V
-L48 =	Light with 48 V
-L110 =	Light with 110 V
-L220 =	Light with 220 V

RF3 — RF3-8
RF5
RF7
RF10
RF4-1
RF4-2
RF4-3
RF12
RF14
BTU
ATF-1
ATF-2
ATF-2.5
ATF-3
ATF-3.5
ATF-4
PLF1
PLF2
PVD

Notes Section:

Section 2: BAG HOUSING & ELEMENTS

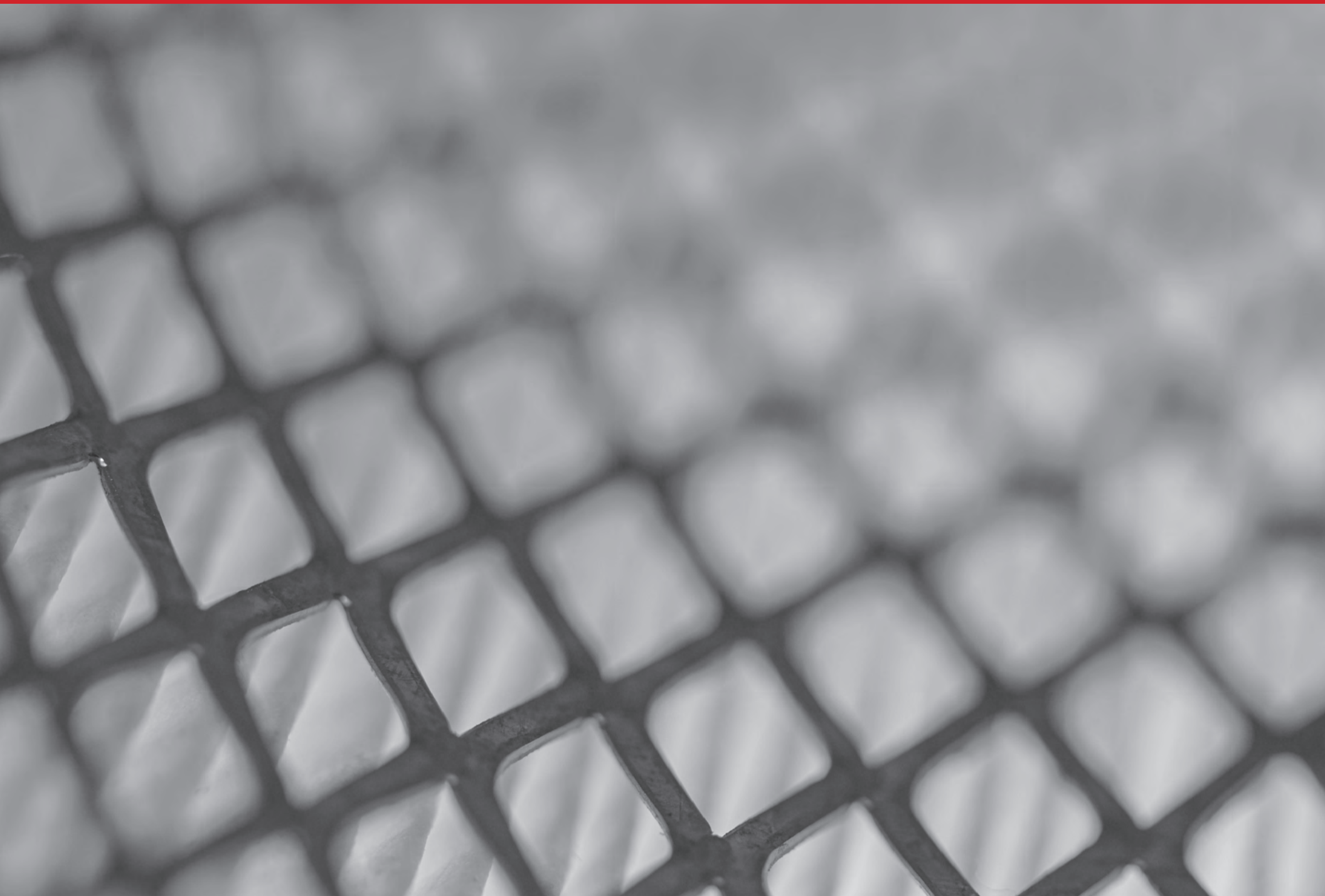

Bag Housings and Elements

Bag Housing

Welded Bags

Schroeder Process Filtration offers a complete line of bag elements and housings to fit a wide variety of applications. From single bag housings, to high flow multiple bag housings, Schroeder has an economical filtration solution to fit nearly any application.

The disposable bag elements offered by Schroeder Process Filtration come in a wide variety of materials, sizes and styles. Bag styles include: steel ring bags (stainless steel optional) that are sewn into top of bag, and plastic flange bags that have flange sewn at top of bag and draw string. A multitude of options are available - call factory for details. Polyester and polypropylene felt can be used for filtration as low as 1 micron while monofilament and multifilament bags can be used for more coarse filtration. Felt bags are either singed or glazed to prevent fiber migration on the clean side of the filter.

Our bags are made in standard industry sizes from 1 through 12. We also have commercial size bags available with a snap band support ring. The seams on the bags are either sewn or welded depending upon the systems requirements. Welded bags offer:

- No needle holes
- No thread migration
- Strong, even sealing of the material

Schroeder Process Filtration bag housings can handle flows as low as 20 gpm and as high as several thousand gpm. Single bag housings are rated for either 100 psi service or 150 psi. All of our multiple bag housings and duplex bag housings are rated at 150 psi. Multiple bag housings are manufactured to hold 2 bags to 10 bags and more. Housings are made from either carbon steel or electro-polished stainless steel. ASME section VII U-stamped housings are available upon request.

Schroeder Industries has long been known for innovation to meet customer needs. Contact the factory if you have an application that requires special consideration and designs. Multiple housings can be skid mounted with integrated valves, sensors and controls to meet your specific needs.

Our bag systems provide efficient and economical filtration. Some advantages to bag filtration are:

- Positive seal to assure zero fluid bypass
- Quick and easy installation
- Handles provide easy removal from housings
- High dirt holding capacity
- Sturdy construction to prevent bags from failing in operation
- 100% incinerable

Bag Housings and Elements

Typical Products Filtered

- Abrasives
- Adhesives
- Aerosol Products
- Chemicals
- Cleaning Fluids
- Coolants
- Cutting Fluids
- Detergents
- Dyestuffs
- Fabric Coatings
- Food Products
- Industrial Coatings
- Juices
- Lacquers
- Latices
- Liquids of all types
- Paints
- Paper Coatings
- Petroleum Products
- Pigments
- Pharmaceuticals
- Plasticizers
- Plastisols
- Printing Inks
- Process Water
- Polymer Solutions
- Roller Coatings
- Textile Chemicals
- Vegetable Oils
- Vinegar
- Waxes
- And Many Other Products

CHEMICAL PROCESSING | INDUSTRIAL | MACHINE TOOL | MINING TECHNOLOGY | POWER GENERATION | PULP & PAPER | STEEL MAKING | WASTE WATER TREATMENT

BH1 Single Bag Housings - 100 psi

100 psi
7 bar

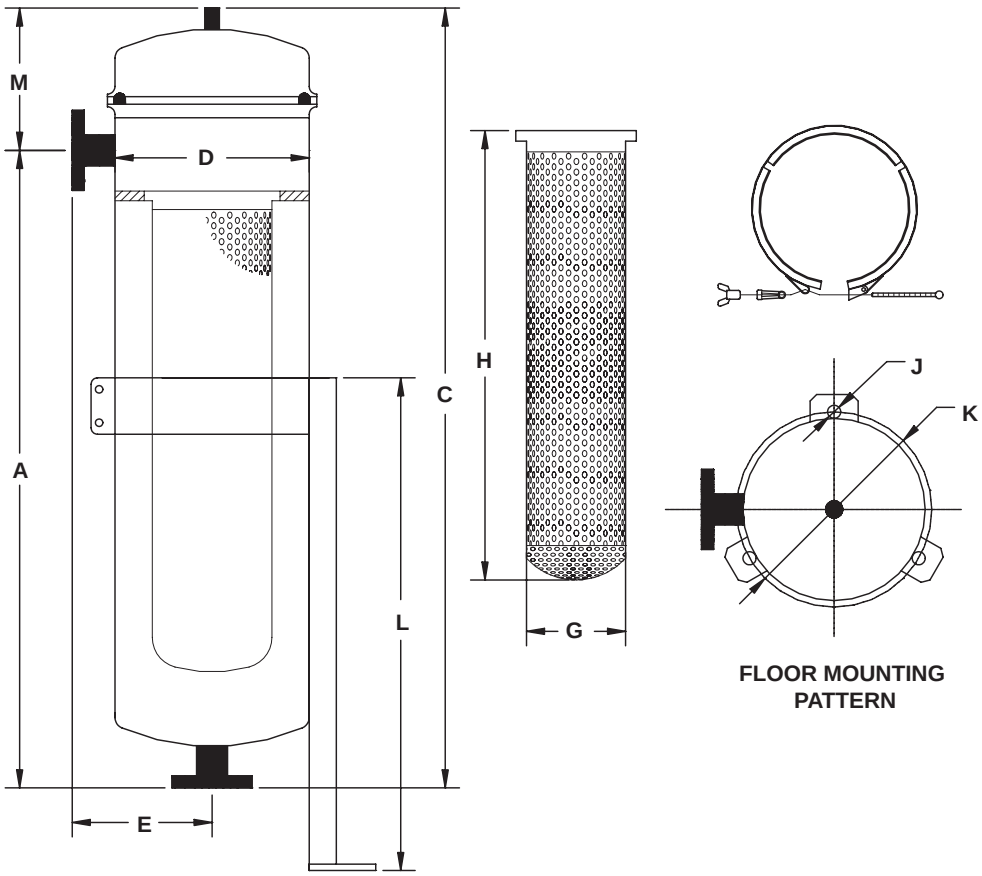

NOTE:
Drawings may change without notice. Contact factory for certified drawings.

Dimensions BH1 100 psi

Model	Bag Size	A inches (mm)	C inches (mm)	D ø inches (mm)	E inches (mm)	G ø inches (mm)	H inches (mm)	J ø inches (mm)	K ø inches (mm)	L inches (mm)	M inches (mm)
BH1	1	21.65 (550)	29.13 (740)	9.13 (232)	6.93 (176)	6.77 (172)	13.78 (350)	0.39 (10)	12.72 (323)	20.47 (520)	7.48 (190)
BH1	2	39.56 (1050)	47.04 (1195)	9.13 (232)	6.93 (176)	6.77 (172)	28.74 (730)	0.39 (10)	12.72 (323)	20.47 (520)	7.48 (190)
BH1	3	14.17 (360)	21.18 (538)	7.08 (180)	5.90 (150)	3.86 (98)	7.87 (200)	0.39 (10)	9.92 (252)	13.78 (350)	7.00 (178)
BH1	4	19.48 (495)	26.49 (673)	7.08 (180)	5.90 (150)	3.86 (98)	12.20 (310)	0.39 (10)	9.92 (252)	13.78 (350)	7.00 (178)

Specifications

Max. Working Pressure:	100 psi (7 bar)			
Max. Working Temperature:	167°F (75°C)			
Support Leg:	Adjustable			
Lid Closure:	Threaded Clamp			
	BH1 - 1	BH1 - 2	BH1 - 3	BH1 - 4
Max. Flow:	90 gpm (333 L/min)	200 gpm (750 L/min)	20 gpm (75 L/min)	45 gpm (167 L/min)
Housing Volume:	7.13 gal (27 L)	12.15 gal (46L)	2.90 gal (11 L)	3.70 gal (14 L)
Empty Weight:	46 lbs. (21 kg)	57 lbs. (26 kg)	31 lbs. (14 kg)	33 lbs. (15 kg)

Single Bag Housings -150 psi

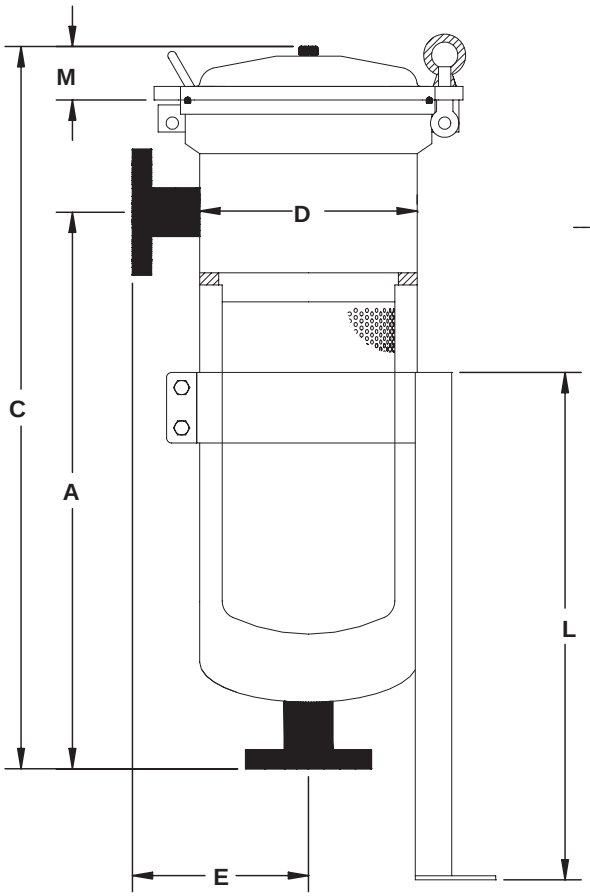

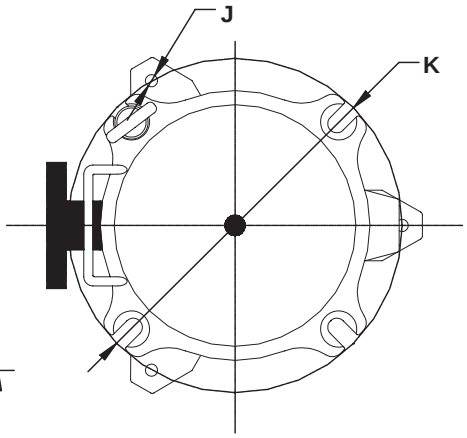

FLOOR MOUNTING PATTERN

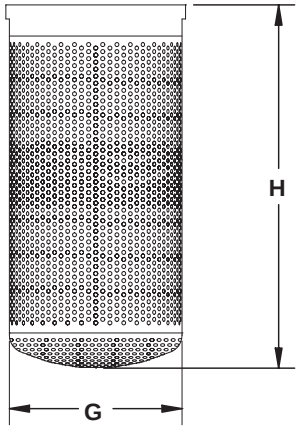

NOTE:
Drawings may change without notice. Contact factory for certified drawings.

Dimensions BH1 150 psi

Model	Bag Size	A inches (mm)	C inches (mm)	D ø inches (mm)	E inches (mm)	G ø inches (mm)	H inches (mm)	J ø inches (mm)	K ø inches (mm)	L inches (mm)	M inches (mm)
BH1	1	21.65 (550)	29.13 (740)	8.50 (216)	6.61 (168)	6.77 (172)	13.78 (350)	0.39 (10)	13.07 (332)	19.84 (504)	2.56 (65)
BH1	2	36.61 (930)	44.09 (1120)	8.50 (216)	6.61 (168)	6.77 (172)	28.74 (730)	0.39 (10)	13.07 (332)	22.72 (704)	2.56 (65)
BH1	3	13.78 (350)	19.49 (495)	5.51 (140)	5.32 (135)	3.82 (97)	7.87 (200)	0.39 (10)	8.31 (211)	13.78 (350)	1.58 (40)
BH1	4	17.72 (450)	23.43 (595)	5.51 (140)	5.32 (135)	3.82 (97)	12.20 (310)	0.39 (10)	8.31 (211)	13.78 (350)	1.58 (40)

Specifications

Max. Working Pressure:	150 psi (10 bar)			
Max. Working Temperature:	167°F (75°C)			
Support Leg:	Adjustable			
Lid Closure:	Swing Bolts			
	BH1 - 1	BH1 - 2	BH1 - 3	BH1 - 4
Max. Flow:	90 gpm (333 L/min)	200 gpm (750 L/min)	20 gpm (75 L/min)	45 gpm (167 L/min)
Housing Volume:	6.07 gal (23 L)	9.77 gal (37 L)	1.66 gal (6.3 L)	2.06 gal (7.8 L)
Empty Weight:	75 lbs. (34 kg)	95 lbs. (43 kg)	40 lbs. (18 kg)	46 lbs. (21 kg)

Single Bag Housings -100 & 150 psi

Filter Model Number Selection

How to Build a Valid Model Number for a Single Bag Housing, 100 & 150 psi:

BOX 1	BOX 2	BOX 3	BOX 4	BOX 5	BOX 6	BOX 7
BH						

Example: NOTE: One option per box

BOX 1	BOX 2	BOX 3	BOX 4	BOX 5	BOX 6	BOX 7	
BH	1	2	304S	2N	E	0	= BH12304S2NE0

BOX 1

Filter Series
BH

BOX 2

# of Bags
1

BOX 3

Bag Size
1 = Size 1
2 = Size 2
3 = Size 3
4 = Size 4

BOX 4

Material
304S = 304 Stainless Steel
316S = 316 Stainless Steel
316L = 316L Stainless Steel

BOX 5

Connection
1N = 1" NPT
15 = 1.5" NPT
2N = 2" NPT
2F = 2" Flange
25 = 2.5" NPT
25F = 2.5" Flange
3N = 3" NPT
3F = 3" Flange
4N = 4" NPT
4F = 4" Flange

BOX 6

Seal Material
E = EPDM
S = Silicone
V = Viton
W = Teflon Encapsulated Viton

BOX 7

Pressure Rating
0 = 100 psi
1 = 150 psi

Multi Bag Housings BH1 - BH14

296-1981 gpm
1500-7500 L/min

150 psi
10 bar

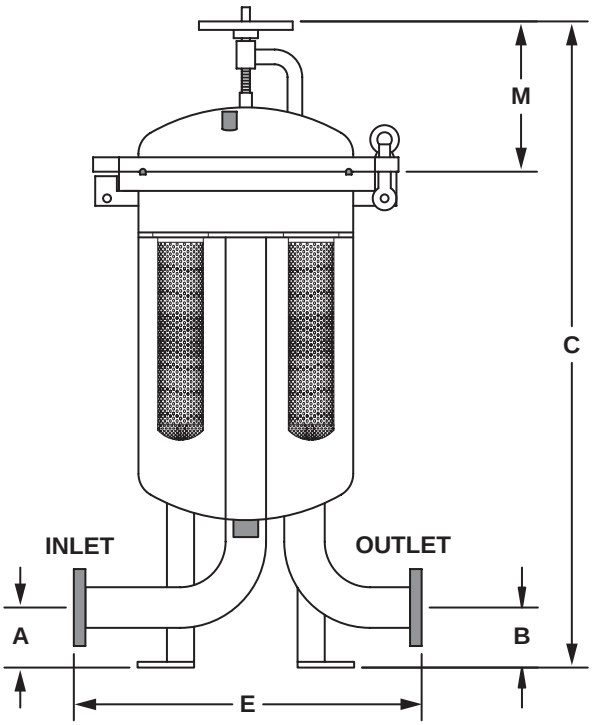

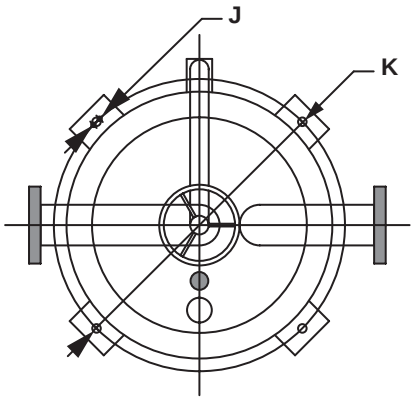

FLOOR MOUNTING PATTERN

NOTE:
Drawings may change without notice. Contact factory for certified drawings.

Multiple Bag Housing Dimensions

Number of Bags	Available Porting (Flange)	A		B		C		E		øJ		øK		M	
		Inches	mm	Inches	mm	Inches	mm	Inches	mm	Inches	mm	Inches	mm	Inches	mm
2	3"	4.25	108	4.25	108	56.02	1423	22.99	584	0.55	14	20.31	516	14.57	370
	4"	5.00	127	5.00	127	58.35	1482	25.98	660	0.55	14	20.31	516	14.57	370
3	3"	4.25	108	4.25	108	58.46	1485	27.01	686	0.55	14	24.33	618	16.02	407
	4"	5.00	127	5.00	127	60.79	1544	28.50	724	0.55	14	24.33	618	16.02	407
4	3"	4.25	108	4.25	108	58.78	1493	27.48	698	0.55	14	27.72	704	16.14	410
	4"	5.00	127	5.00	127	61.10	1552	29.02	737	0.55	14	27.72	704	16.14	410
	6"	5.98	152	5.98	152	65.43	1662	34.49	876	0.55	14	29.29	744	16.34	415
6	3"	4.25	108	4.25	108	59.17	1503	28.50	724	0.55	14	29.29	744	16.34	415
	4"	5.00	127	5.00	127	61.50	1562	30.04	763	0.55	14	29.29	744	16.34	415
	6"	5.98	152	5.98	152	65.43	1662	34.49	876	0.55	14	29.29	744	16.34	415
8	4"	5.00	127	5.00	127	70.20	1783	34.02	864	0.55	14	37.87	962	23.27	591
	6"	5.98	152	5.98	152	72.52	1842	39.02	991	0.55	14	37.87	962	21.46	545
	8"	7.24	184	7.24	184	80.63	2048	41.22	1047	0.55	14	37.87	962	25.59	650
10	6"	5.98	152	5.98	152	79.21	2012	42.99	1092	0.55	14	41.89	1064	26.97	685
	8"	7.24	184	7.24	184	83.19	2113	42.01	1067	0.55	14	41.89	1064	26.97	685
	10"	8.50	216	8.50	216	89.25	2267	47.99	1219	0.55	14	47.83	1215	27.95	710

Specifications

Max. Working Pressure:	150 psi (10 bar)
Max. Working Temperature:	167°F (75°C)
Support Legs:	Fixed
Lid Closure:	Swing Bolts

Multi Bag Housings

Housing Flow and Volume

Number of Bags	Max Flow		Empty Weight		Housing Volume	
	GMP	L/Min	lbs	kg	Gallons	Liters
2	396	1500	214	97	30.64	116.00
	396	1500	225	102	30.91	117.00
3	594	2250	276	125	49.66	188.00
	594	2250	287	130	49.93	189.00
4	793	3000	355	161	64.46	244.00
	793	3000	373	169	64.72	245.00
	793	3000	454	206	73.70	279.00
6	991	3750	437	198	73.18	277.00
	1189	4500	445	202	73.44	278.00
	1189	4500	454	206	73.70	279.00
8	1387	5250	992	450	129.18	489.00
	1585	6000	992	450	129.71	491.00
	1585	6000	1014	460	130.24	493.00
10	1783	6750	1301	590	174.88	662.00
	1981	7500	1323	600	175.41	664.00
	1981	7500	1576	715	225.60	854.00

Filter Model Number Selection

How to Build a Valid Model Number for a Multi-Bag Housing, 150 psi:

BOX 1	BOX 2	BOX 3	BOX 4	BOX 5	BOX 6	BOX 7
BH						

Example: NOTE: One option per box

BOX 1	BOX 2	BOX 3	BOX 4	BOX 5	BOX 6	BOX 7	
BH	4	2	304S	4F	E	1	= BH42304S4FE1

BOX 1

Filter Series
BH

BOX 2

# of Bags
2
3
4
5
6
7
8
9
10
11
12
13
14

BOX 3

Bag Size
2 = Size 2

BOX 4

Material
304S = 304 Stainless Steel
316S = 316 Stainless Steel
316L = 316L Stainless Steel

BOX 5

Connection
3F = 3" Flange (2, 3, 4 and 6 bags)
4F = 4" Flange (2, 3, 4, 6 and 8 bags)
6F = 6" Flange (4, 6, 8, and 10 bags)
8F = 8" Flange (8 & 10 bags)
10F = 10" Flange (10 bags)

BOX 6

Seal Material
E = EPDM
S = Silicone
V = Viton
W = Teflon Encapsulated Viton

BOX

Pressure Rating
1 = 150 psi

Duplex Multi Bag Housings

DBH1 - DBH10

792-3962 gpm
3000-15,000 L/min

150 psi
10 bar

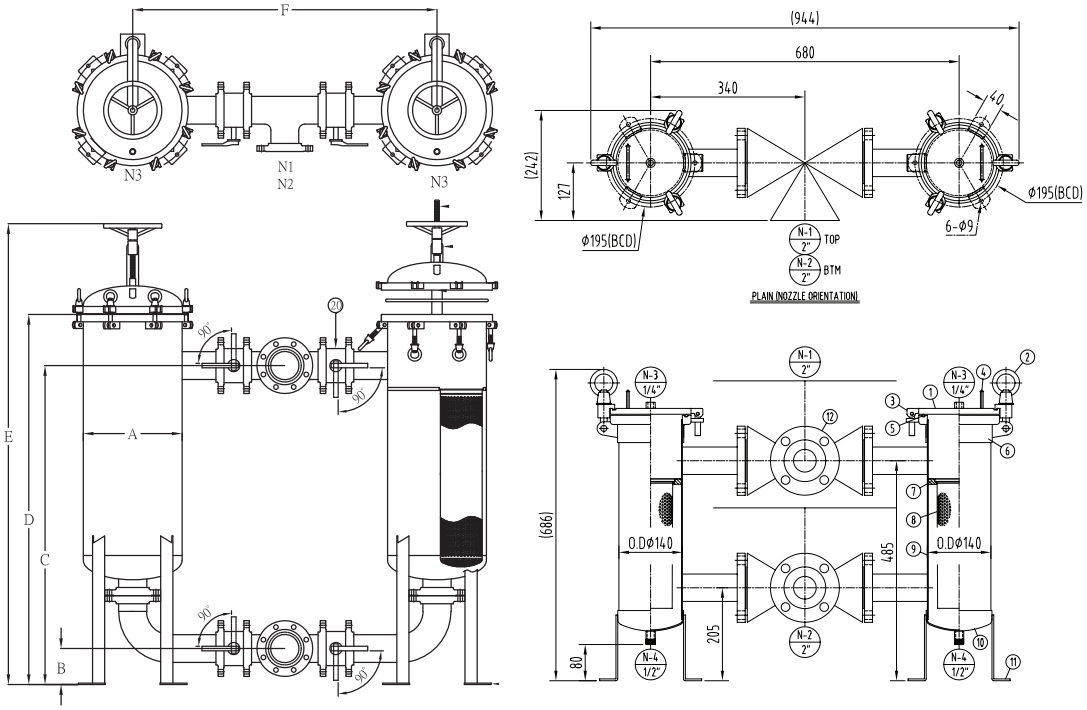

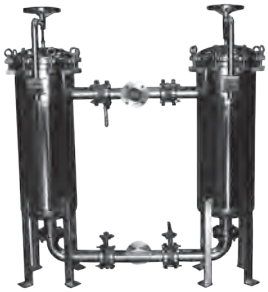

Dimensions

A Inches (mm)	B Inches (mm)	C Inches (mm)	D Inches (mm)	E Inches (mm)	F Inches (mm)	G Inches (mm)	N1	N2	N3
16 (406)	6 (148)	52 (1310)	60 (1520)	75 (1893)	49 (1250)	20 (516)	Inlet 3 / 150P SORF	Outlet 3 / 150P SORF	Vent .5 / PT F

Specifications

Max. Working Pressure:	150 psi (10 bar)
Max. Working Temperature:	167°F (75°C)
Support Legs:	Adjustable
Lid Closure:	Swing Bolts

Filter and Media are sold separately.
Additional sizes available - call factory for details.

Duplex Multi Bag Housings

How to Build a Valid Model Number for a Duplex Bag Housing, 150 psi:

BOX 1	BOX 2	BOX 3	BOX 4	BOX 5	BOX 6	BOX 7
DBH						

Example: NOTE: One option per box

BOX 1	BOX 2	BOX 3	BOX 4	BOX 5	BOX 6	BOX 7	
DBH	4	2	304S	4F	E	1	= DBH42304S3FE1

BOX 1

Filter Series
DBH

BOX 2

# of Bags
1
2
3
4
5
6
7
8
9
10

BOX 3

Bag Size
2 = Size 2

BOX 4

Material
304S = 304 Stainless Steel
316S = 316 Stainless Steel
316L = 316L Stainless Steel

BOX 5

Connection
3F = 3" Flange (2, 3, 4 and 6 bags)
4F = 4" Flange (2, 3, 4, 6 and 8 bags)
6F = 6" Flange (4, 6, 8, and 10 bags)
8F = 8" Flange (8 & 10 bags)
10F = 10" Flange (10 bags)

BOX 6

Seal Material
E = EPDM
S = Silicone
V = Viton
W = Teflon Encapsulated Viton

BOX

Pressure Rating
0 = 100 psi
1 = 150 psi

Filter and Media are sold separately.

Bag Element Operating Guidelines

Recommended change-out:

It is recommended that a liquid filter bag be changed out when the differential pressure (ΔP) between the upstream and downstream sides reaches 20 - 25 psi. Although this is a rule of thumb, some applications may require change-out at a ΔP well below 20 psi. Under no circumstances should ΔP be allowed to exceed 25 psi.

What is the product that needs to be filtered?

Obtain all the details of the liquid/solid composition. You need to confirm the chemical compatibility to ensure the proper material is used for the bag, retainer type and the housing for the filter bags.

What is the viscosity of the product to be filtered?

Use a flow rate chart to find out the optimum operating parameters.

What is the pH level in order to choose the proper material for the filtration system?

Is the product an acid with a pH of 1-7 or is it Alkaline 7-14?

What type of solids does the product contain?

Are the solids crystalline or gelatinous? Crystalline solids can form a permeable layer on the filter media and gelatinous solids can form an impermeable layer that will cause blinding off of the filter media.

What is the density of the solids?

What is the PPM (parts per million) of the solids?

What is the range of particle size? What size does the customer want to remove and at what efficiency?

The range of particulate size is important in determining which micron rating your filter media should be? Filter bags can be made with nominally rated material or with high efficiency material.

What is the flow rate of the product?

The flow rate is critical information required when determining the size and number of bags required.

Is it a continuous or batch process?

This is important in order to determine the filter bag consumption.

What is the operating pressure of the system?

At what minimum and maximum potential pressure is the system designed to run? What is the acceptable pressure required? Filter bag differential pressure capacity is 20-25 psi.

What is the temperature of the product being filtered?

Temperature has an impact on the viscosity, the filter media and the O-rings. The temperature can even affect the corrosion rate of the housing.

Sizes Available

				Bag/Collar/Style				Manufacturers					
Size	Sq. Ft.	Diameter (in.)	Length (in.)	S	SS	DS	P	FSI	AFF	GAF	Strainrite	Rosedale	Commercial
1	2.5	7.06	16.5	•	•	•	•	•	•	•	•	•	
2	5.0	7.06	32.0	•	•	•	•	•	•	•	•	•	
3	0.8	4.12	8.0	•	•	•	•	•				•	
4	1.3	4.12	14.0	•	•	•	•	•				•	
7	1.3	5.5	15.0	•	•	•						•	
8	2.0	5.5	21.0	•	•	•						•	
9	3.3	5.5	31.0	•	•	•						•	
C1	2.5	7.31	16.5			•							•
C2	5.0	7.31	32.5			•							•

Bag Elements

Filter Bag Pressure Drop PB

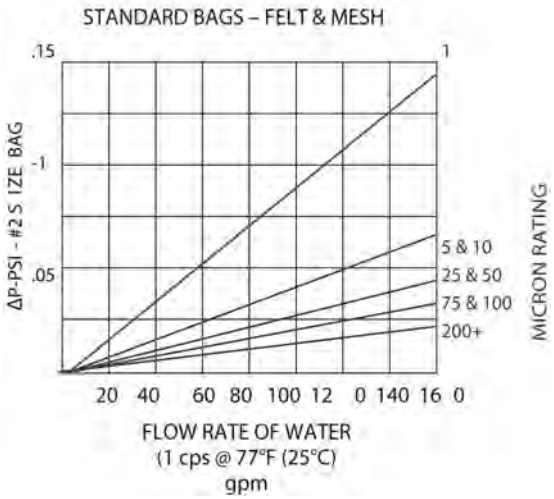

Step 1 The graphs show the ΔPB produced by a #2 size bag for water, 1 cps @ 77°F (25°C). The pressure drop is determined from the type of bag, the micron rating and flow rate.

Step 2 Correct for bag size from the table below if the size is different than #2 size.

Bag Size	Dia X Length	Multiply By
2	7.06 x 32	1.00
9	5.5 x 32	1.50
1	7.06 x 16	2.25
8	5.5 x 21	2.25
7	5.5 x 15	3.00
4	4.15 x 14	4.50
3	4.15 x 8	9.00

Step 3 If the viscosity of the liquid is greater than 1 cps (water @ 77°F (25°C)). Multiply the result from step 2 by the proper correction factor from the chart below.

Viscosity (cps)	Correction Factor
50	4.5
100	8.3
200	16.6
400	27.7
800	50.0
1000	56.2
1500	77.2
2000	113.6
4000	161.0
6000	250.0
8000	325.0
10000	430.0

The value obtained in step 3, ΔPB is the clean pressure drop caused by the filter bag.

SUMMARY

System Pressure Drop = ΔPS = ΔPH + ΔPB

For new applications, the ΔPS should be 2.0 psi (0.14 bar) or less. For high contaminant loading applications, this value should be as low as possible. The lower this value is, the more contaminant a bag will hold. For applications with nominal contaminants, this value can go to 3.0 psi (0.21 bar) or more. Consult factory for specific recommendations when the clean ΔP exceeds 2.0 psi (0.14 bar).

Micron-Rated Bag Elements

How to Build a Valid Model Number for a Micron-Rated Bag Element:

BOX 1	BOX 2	BOX 3	BOX 4	BOX 5	BOX 6

Example: NOTE: One option per box

BOX 1	BOX 2	BOX 3	BOX 4	BOX 5	BOX 6	
TEF	25	S	X1	F	A	= TEF25SX1FA

BOX 1

Bag Material

PEF =	Polyester Felt
PPF =	Polypropylene Felt
NOF =	Nomex Felt
PPM =	Polypropylene Monofilament Mesh
NMO =	Nylon Monofilament Mesh
PEM =	Polyester Multifilament Mesh
NMU =	Nylon Multifilament Mesh
TEF =	Teflon Felt

BOX 2

Micron Rating

See chart below for available micron ratings

BOX 3

Cover Material

P =	Plain, No Cover
SBP =	Spun Bonded Polyester
PEM =	Polyester
G =	Glazed
S =	Singed

BOX 4

Bag Size

Size	Diameter	Length (in)
1 =	7.06	16.5
2 =	7.06	32
3 =	4.12	8
4 =	4.12	14
7 =	5.5	15
8 =	5.5	21
9 =	5.5	31
11 =	8	16
12 =	8	30
C1 =	7.31	16.5
C2 =	7.31	32.5
X1 =	4.35	8
X2 =	4.35	14
XO1 =	6	22

BOX 5

Collar Type

S =	Standard Galvanized Steel Ring
SS =	Stainless Steel Ring
DS =	Draw String
P =	Plastic Flange
T =	Titanium
OSS =	OSS Flange
NR =	No Ring
F =	Custom

BOX 6

Options

0 =	No Options
H =	Handles (standard on all flange & ring style bag elements)
WE =	Welded Seams Only Available of PEF & PPF Bags with Plastic Flanges
EB =	Edge Binding
A =	Auto Seams
TTA =	Turn, top stitch, auto seam
RC =	Reverse Collar
SB =	Spun Bond Cover
MC =	Mesh Cover

Technical Information for Liquid Bag Elements

Construction	Fibers		1	3	5	10	15	25	50	75	100	125	150	175	200	250	300	400	600	800	1k
Felt	Polyester	PEF	•	•	•	•	•	•	•	•	•		•		•						
	Polypropylene	PPF	•	•	•	•		•	•		•		•								
	Nomex	NOF	•		•	•		•	•		•				•						
Monofilament	Polypropylene	PPM									•		•		•	•	•	•	•	•	
Mesh	Nylon	NMO			•	•		•	•	•	•	•	•	•	•	•	•	•	•	•	•
Multifilament	Polyester	PEM									•		•		•	•	•	•	•	•	•
Mesh	Nylon	NMU									•		•		•	•	•	•	•	•	•

Medias	Mineral Acids	Organic Acids	Alkalies	Oxidizing Acids	Animal Vegetable Perro-Oils	Organic Solvents	Miro Organisms	Temp. Limits (°F)
Polyester	Good	Good	Good	Good	Excellent	Excellent	Excellent	257°
Polypropylene	Good	Excellent	Good	Fair	Excellent	Good	Excellent	200°
Nomex	Fair	Fair	Good	Poor	Excellent	Excellent	Excellent	425°
Nylon	Poor	Fair	Good	Poor	Excellent	Excellent	Excellent	300°

Polyester Phenolic Treatment (PEPT) Liquid Filter Bag

The Polyester Phenolic Treatment (PEPT) design incorporates single or dual layers of fully infused Phenolic Resin treated Polyester Felt for optimum performance. The PEPT's non-compressible depth fibers are more effective than conventional filters in retaining gel-like particles. Inline cartridges, which accumulate debris on the outside of the element and are more prone to debris falling off during change out, PEPT's filter bags contain the contaminants securly inside the bag, making filter change-out much cleaner.

The proven gradient density of a dual layer of the PEPT bag coupled with the increased surface area results in enhanced efficiencies and increased filter life. This not only ensures the integrity of the filtration process, it builds an affective pre-filter cake that promotes higher efficiencies without high pressure drop or loss of flow capacity.

Features:

- Micron Ratings from 1 to 100
- Broad chemical compatibility
- Handles on all bags
- Choice of Steel Ring or Plastic Flange
- Excellent removal of gel-like particles
- Disc bottom for ease of installation and fit in basket

Polyester Phenolic Treatment Liquid Filter Bag

How to Build a Valid Model Number for an Absolute Rated (PPA) Bag Element:

BOX 1	BOX 2	BOX 3	BOX 4	BOX 5	BOX 6

Example: NOTE: One option per box

BOX 1	BOX 2	BOX 3	BOX 4	BOX 5	BOX 6	
PEH	90	P	P2	SS	H	= PEH90PP2SSH

BOX 1

Bag Material	
PPT =	Polyester Phenolic Treatment Rated

BOX 2

Layers	
SL =	Single Layer
DL =	Double Layer

BOX 3

Micron Rating	
1 =	1 Micron
3 =	3 Micron
5 =	5 Micron
10 =	10 Micron
15 =	15 Micron
20 =	20 Micron
25 =	25 Micron
50 =	50 Micron
75 =	75 Micron
100 =	100 Micron

BOX 4

Bag Size	
P1 =	7.06" x 14"
P2 =	7.06" x 28"

BOX 5

Collar Type	
S =	Galvanized Steel
SS =	Stainless Steel
T =	Titanium
P =	P Flange
F =	F Flange
OSS =	OSS Flange

BOX 6

Options	
H =	Handles (standard)

Oil Absorbing Bag Elements

Materials of Construction

Schroeder's Oil Absorbing Bag Filters (OAB) are a cost-effective solution for removing oil from water while simultaneously filtering as low as 1 micron. The high capacity bag filter is designed with different layers of micro-fibers that not only retain oil, but increase overall efficiency to 95% or greater on microns ranging from 1 to 50. The overall construction of this filter bag has 30 plus square feet of media and can retain 10 pounds or more of oil depending on the micron. These bags are offered in standard bag size 1 or 2.

Efficiency

- Food Processing
- Hydraulic Systems
- Gelatinous Contaminants
- Cutting Oil
- Vacuum Pump
- Parts Washing
- Engine Oil/Transmission Oil
- Natural Gas Sweetening
- Natural Gas Dehydration
- Lubrication Oil

Model Code

How to Build a Valid Model Number for an Oil Absorbing (OAB) Bag Element:

BOX 1	BOX 2	BOX 3	BOX 4	BOX 5
OAB				

Example: NOTE: One option per box

BOX 1	BOX 2	BOX 3	BOX 4	BOX 5	
OAB	2H	1	SS	H	= OAB2H1SSH

BOX 1

Bag Material
OAB

BOX 2

Micron Rating	
1H =	1m High Efficiency
2H =	2m High Efficiency
5H =	5m High Efficiency
10H =	10m High Efficiency
25H =	25m High Efficiency
50h =	50m High Efficiency

BOX 3

Bag Size
1
2

BOX 4

Collar Type	
S =	Galvanized Steel
OSS =	OSS Flange
F =	F Flange

BOX 5

Options	
H =	Handles (Standard)

High Efficiency Bag Elements

High efficiency bag elements are constructed of Polypropylene meltblown microfibers, allowing for very fine particles capture at high efficiencies. All high efficiency filter bags are over 90% efficient at their suggested micron rating. The bag construction makes this filter an easy to use, convenient, high performance alternative to filter cartridges. Maximum flow per bag is 60 gpm.

Materials of Construction

Product Number:	PPH1H	PPH3H	PPH5H	PPH10H	PPH25H
Dirt Holding Capacity grams of AC Test Dust Loaded to 35 psi at 12 gpm	74	150	160	175	195
Oil Holding Capacity grams of Mineral Oil at Saturation	528	657	690	726	798

Efficiency

Product Number	Suggested Application Rating	Efficiency
PPH1H	1.0 micron	93.00%
PPH2H	2.0 micron	94.00%
PPH5H	5 micron	94.00%
PPH10H	10 micron	94.00%
PPH25H	25 micron	97.00%
PPH50H	50 micron	97.00%

Model Code

How to Build a Valid Model Number for a High Efficiency (PPH) Bag Element:

BOX 1	BOX 2	BOX 3	BOX 4	BOX 5

Example: NOTE: One option per box

BOX 1	BOX 2	BOX 3	BOX 4	BOX 5	
PEH	5H	3	F	H	= PEH5H3FH

BOX 1

Bag Type	
PEH =	Polyester High Efficiency
PPH =	Polypropylene High Efficiency

BOX 2

Micron Rating	
1H =	1m High Efficiency
2H =	2m High Efficiency
5H =	5m High Efficiency
10H =	10m High Efficiency
25H =	25m High Efficiency
50h =	50m High Efficiency
	90

BOX 3

Bag Size
1
2

BOX 4

Collar Type	
S =	Galvanized Steel
F =	F Flange
OSS =	OSS Flage

BOX 5

Options
H = Handles (standard)

Absolute Rated Bag Elements

Materials of Construction

The Absolute Rated Bag Elements are constructed of polypropylene meltblown microfibers, allowing for very fine particles capture at high efficiencies. All Absolute Rated filter bags are over 97% efficient at their suggested micron rating. The bag construction makes this filter an easy to use, convenient, high performance alternative to filter cartridges. The filter contains over 30 sq. ft. of usable filter media. This compares with only 4.4 sq. ft. for most filter bags and only .65 sq. ft. for most cartridges. Maximum flow per bag is 40 gpm.

Product Number:	PPA3A	PPA5A	PPA13A	PPA32A
Dirt Holding Capacity grams of AC Test Dust Loaded to 35 psi at 12 gpm	225	275	525	625
Oil Holding Capacity grams of Mineral Oil at Saturation	1000	1250	2300	2500

Efficiency

PPH/PPA

Product Number	Suggested Application Rating	Efficiency
PPA1A	1.0 micron	97.00%
PPA2A	2.0 micron	97.00%
PPA3A	3.0 micron	97.00%
PPA5A	5.0 micron	97.00%
PPA13A	13.0 micron	97.00%
PPA32A	32.0 micron	97.00%

Model Code

How to Build a Valid Model Number for an Absolute Rated (PPA) Bag Element:

BOX 1	BOX 2	BOX 3	BOX 4	BOX 5	BOX 6

Example: NOTE: One option per box

BOX 1	BOX 2	BOX 3	BOX 4	BOX 5	BOX 6	
PEH	90	P	P2	SS	H	= PEH90PP2SSH

BOX 1

Bag Material	
PPA =	Polypropylene Absolute Rated

BOX 2

Micron Rating	
1A =	1m Absolute
2A =	2m Absolute
3A =	3m Absolute
5A =	5m Absolute
13A =	13m Absolute
32A =	32m Absolute
50A =	50m Absolute
75A =	75m Absolute
100A =	100m Absolute

BOX 3

Cover Material
P = Plain, No Cover

BOX 4

Bag Size
2

BOX 5

Collar Type	
SS =	Stainless Steel
PP =	Polypropylene
P =	P Flange
F =	F Flange
OSS =	OSS Flage

BOX 6

Options
H = Handles (standard)

Bag Type High Flow Filter Cartridges

BR

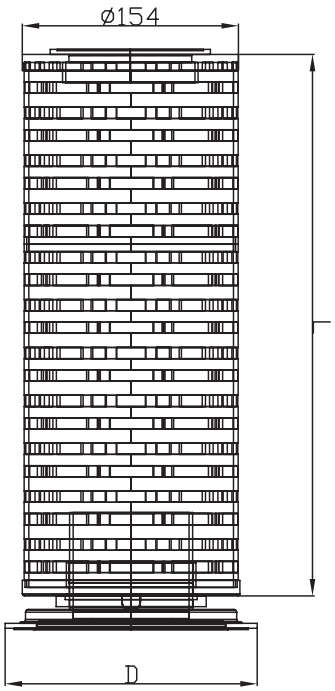

L:
16″=370
32″=634
D:
1# Flange =183mm
2# Flange =177mm

BH1
100 psi

BH1
150 psi

BH2-
BH10

DBH2-
DBH10

cron- Rated/
OAB

PPH/PPA

BR

Description

Our Bag Type High Flow Filter Cartridges are made of pleated polypropylene depth media and are designed with inside-out flow direction which is correspondent with the bag filter. The cartridges satisfy processes requiring high purity and possess high flow rates and long service life. Innovative push-in flanges enable quick and convenient replacements into most commercial bag filter housings. With advantages of high flow rate and purity, fewer change outs and lower maintenance costs are required.

- Convertible into most commercial bag filter housings, providing cost-saving options without hardware change
- High surface area design provides high flow capacity and longer service life
- Innovative push-in flanges enable quick and convenient change outs
- Inside-out flow effectively traps contaminants inside the elements
- Manufactured by advanced thermal welding techniques, cartridges are free of binders and additives

Specifications

Media:	Polypropylene
Micron Rating:	1, 3, 5, 25 - 100 µm, 200 µm
Gasket/O-Ring:	EPDM, Viton®
Inside Diameter:	3.5" (90mm)
Outside Diameter:	7.25" (184mm)

Max. Operating Temperature:	160°F (70°C)
Max. Differential Pressure:	75 psi at 68°F (5.1 bar at 29°C) 35 psi at 130°F (2.4 bar at 54°C)
Recommended Change Out Differential Pressure:	35 psi at 130°F (2.4 bar at 54°C)

Bag Type High Flow Filter Cartridges

Filter Model Number Selection

How to Build a Valid Model Number for a Bag Type High Flow Filter Cartridge:

BOX 1	BOX 2	BOX 3	BOX 4	BOX 5	BOX 6
BR					

Example: NOTE: One option per box

BOX 1	BOX 2	BOX 3	BOX 4	BOX 5	BOX 6	
BR	SH	5	P	2	V	= BR-SH-5-P-2-V

BOX 1

Unit Type
BR = PP Fiber Pleated Filter Cartridge

BOX 2

Series
SH = Bag Type Series

BOX 3

Micron Rating
1 = 1 µm
3 = 3 µm
5 = 5 µm
25 = 25 µm
100 = 100 µm
200 = 200 µm

BOX 4

Filter Media
P = Polypropylene

BOX 5

Nominal Length
1 = Size 1 Bag
2 = Size 2 Bag
40 = 40" Length

BOX 6

Gasket/O-Ring Option
E = EPDM
V = Viton®

Pressure Drop Information Based on Flow Rate and Viscosity

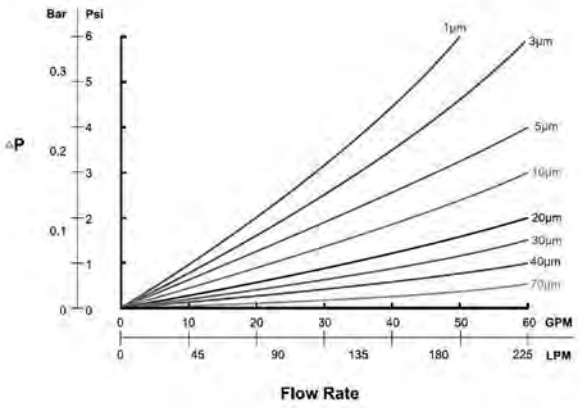

Operating Data

Schroeder FSI Pall Crossover

Product Family	Pall FSI Product	Schroeder Replacement xx = Micron Rating
Felt Filter Bags	PONG PENG	Standard Felt Filter Bags PPFxxG or PEFxxS
	POEX PEEX	Double layer felt bags PPFxxG or PEFxxS
	BHT	Standard Felt Liquid Bags NFO
Mesh Filter Bags	NMO	Standard Mesh Filter Bags NMO
	PEM	Standard Mesh Filter Bags PEM
	PMO	Standard Mesh FIlter Bags PPM
Microfiber Filter Bags	POMF	Call for Quote
Seamless Bags	BOS	Call for Quote
Cartridges	VOREX (CMMF)	DCE

Notes Section:

Section 3: CARTIDGE HOUSING & FILTERS

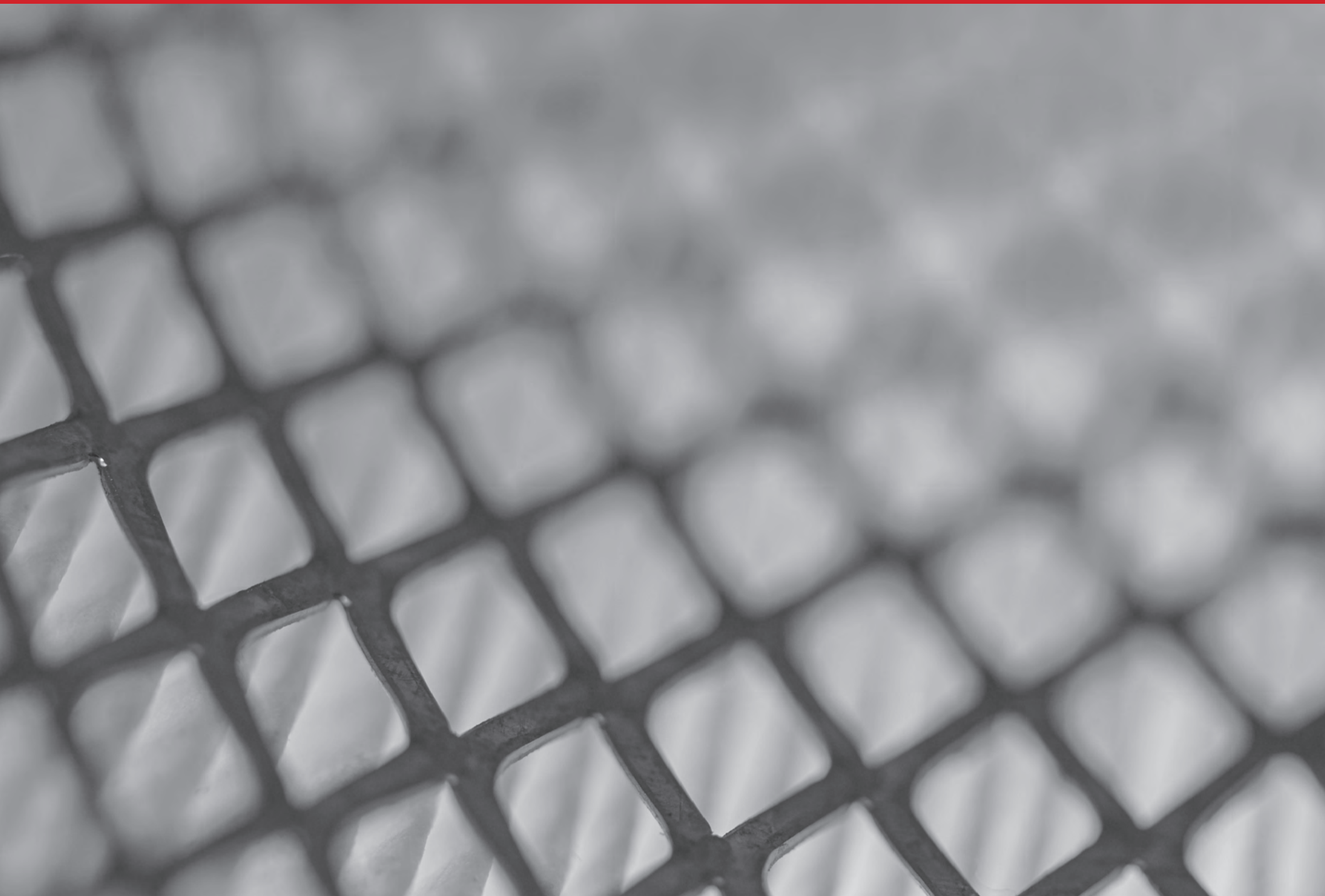

Cartridge Housings and Elements

Overview

Schroeder has depth filtration cartridges for fine filtration and the housings to fit. Standard cartridges are available in 10, 20, 30 and 40 inch lengths. These meltblown filters come in either a 2.5" or 4.5" diameter. Depth filter cartridges have larger openings towards the outside of the element and smaller openings near the center. This allows for higher dirt holding capacity to lengthen the life of the element.

Most common are the elements with a double open end (DOE). Cartridges with either a 222 o-ring seal or a FIN style are also available. The range of filtration on these elements is from 1 micron up to 100 microns. All of our elements are made from 100% pure polypropylene fibers to ensure high quality. Elements with center tubes for support are also available.

The housings for these elements are available with either a 100% polypropylene head and bowl or in electro-polished stainless steel.

The polypropylene housings accept either the 10" or 20" elements for both 2.5" and 4.5" diameter. The threaded head and bowl allow for quick and easy changing of the elements. Various sizes of NPT ports make installation quick and easy and allow flows up to 40 gpm depending upon the housing size. Because the housings are 100% polypropylene, they are tough and durable. The 2.5" housings are rated up to 125 psi (8.6 bar) at 140°F (60°C) while the 4.5" housings are rated for 100 psi (7.0 bar) at 140°F (60°C).

Stainless steel housings are used for higher flow rates and pressure up to 150 psi (10.0 bar) at 167°F (75°C). These larger housings hold seven elements in a circular array in all four standard lengths. The quick release clamp on the lid allows for easy changing of the elements while providing a tight seal. Each one comes standard with a gauge port in the lid. DOE and 222 style cartridges are accepted by these housings.

Both types of housing are durable, built to last in harsh conditions and have low clean pressure drops.

Features

- 100% polypropylene construction
- Max operating temperature 167°F (75°C)
- Max pressure drop 46 psi (3.2 bar) @ 68°F (20°C)
- Recommended cartridge replacement at 22 psi (1.5 bar)
- Special lengths and micron ratings available upon request
- 222 o-ring seal, FIN style end caps and center support tubes available upon request

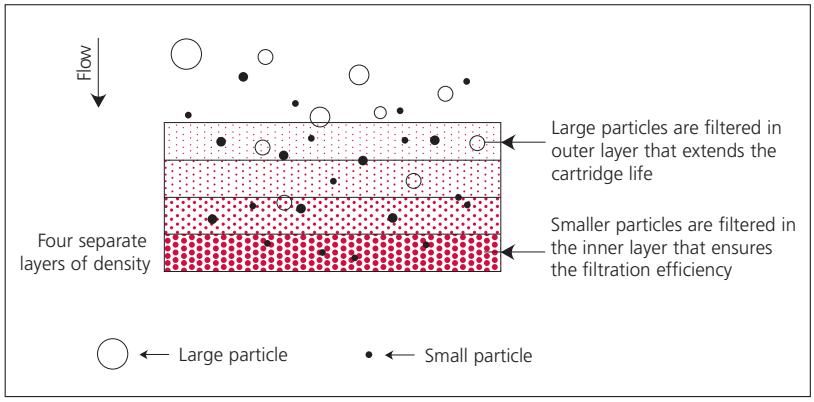

Industries Served

CHEMICAL PROCESSING | INDUSTRIAL | THERMAL TRANSFER | POWER GENERATION | PULP & PAPER | STEEL MAKING | WASTE WATER TREATMENT

SW Series Precision Wound Filter Cartridges

SW
DCE/ACE
PP
CH1
CH3 - CH7
CH3 -CH12
CH13-CH173
RMF

Benefits:

- Wide range of materials to ensure process compatibility
- Variety of sizes and configurations to ensure proper sizing, fit and sealing
- High sediment-holding-capacity for longer time between filter cartridges changes
- Continuous lengths up to 72" (183 cm)
- Technical Support
- Prompt deliveries

Applications:

- Potable water
- Process water
- Pre-filtration for membrane/reverse osmosis (RO) systems
- Food and beverage
- Chemicals, acids, bases
- Oils, fuels and solvents
- Plating solutions, electronics, circuit board
- Produced water and waste water; fracking

Media:	Polypropylene Cotton Acrylic Rayon Nylon Polyester Fiberglass
Cartridge ID:	1.09" (2.8 cm) nominal std. 1.22" (3.1 cm) and 1.5" (3.8 cm) optional
Cartridge OD:	2" (5 cm) to 4½ (11.4 cm)
Length:	3" (7.6 cm) to 72" (183 cm) special lengths available
Efficiency:	90% nominal; 80% below 3 micron
Maximum Differential Pressure:	60 PSID (2 bar)
Recommended Max Change-Out Differential Pressure	30 PSID (2)

Note: Please contact factory for data on other media and fluids

Max Temperature				
Media	**Polypro Core**	**Polyester Core**	**Tin Core**	**SST Core**
Polyproplene	180° F	180° F	180° F	180° F
Cotton	180° F	250° F	250° F	250° F
Acrylic	180° F	250° F	250° F	250° F
Rayon	180° F	275° F	275° F	275° F
Nylon	180° F	275° F	275° F	275° F
Polyester	180° F	300° F	300° F	300° F
Fiberglass	180° F	300° F	400° F	750° F

Pressure Drop vs. Flow Rate
(Polypropylene, Polyester and Nylon Media)

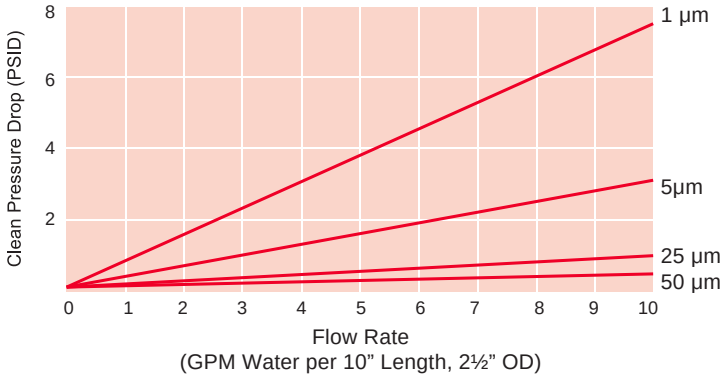

SW Series Precision Wound Filter Cartridges

Filter Model Number Selection

How to Build a Valid Model Number for Cartridge Housings and Elements:

BOX 1	BOX 2	BOX 3	BOX 4	BOX 5	BOX 6	BOX 7
SW						

Example: NOTE: One option per box

BOX 1	BOX 2	BOX 3	BOX 4	BOX 5	BOX 6	BOX 7	
SW	3	10	30	6	D	EC	= SW310306DEC

BOX 1

Cartridge Type
SW = Precision Wound Filter Cartridge

BOX 2

Micron Rating
0.5
1
3
5
10
15
20
25
30
50
75
100
125
150
200

BOX 3

Filter Media
01 = FDA Polypropylene
02 = Fibrillated Polypropylene
03 = Industrial Polypropylene
04 = Natural Cotton + Polyester
05 = White Cotton
06 = FDA Bleached Cotton
09 = Rayon
10 = Teflon
11 = Nylon
13 = Polyester
14 = Acrylic
15 = Glass Fiber
18 = Polyphenylene Sulfide PPS
20 = Antimicrobial Polypropylene
21 = Heat resistant meta-aramid Conex® (trademark of Teijin)
33 = EcoWound™ filter*

BOX 4

Length (in.)
3.75
4
4.75
5
6
9.75
10
12
12.5
19.5
20
24.5
30
36
40
50
72

BOX 5

Core Type
1 = 1" id Polypropylene
2 = 1" id Glass Filled Polypropylene
3 = 1" id Tinned Steel
4 = 1" id 304 SST
6 = 1" id 316 SST
7 = 1" id Nylon
8 = 1.22" id Polypropylene
9 = 1.5" id Polypropylene
10 = 1" id Teflon
11 = 1.5" id 304 SST
12 = 1.75" id Polypropylene
13 = 1.5" id Tin Steel

BOX 6

Outside Diameter
A = 2
B = 2 1/4"
C = 2 3/8"
D = 2 1/2"
E = 2 5/8"
G = 3"
H = 4"
I = 4 1/4"
J = 4 1/2"

BOX 7

Options
N = Polyester Core Cover
NF = Acrylic Resin Bonded Glass Nonwoven Core Cover
NN = Nylon Core Cover
Y = Polypropylene Core Cover
2SP = 222 w/ plug
2SD = 222 w/ disc
6SP = 226 w/ plug
6SD = 226 w/ disc
6SF = 226 w/ fin
E = Extended Core
EC = End Caps PVC
ECP = End Caps Polypro
P = Plug In One Hand
SPR = Polypro Spring

Cartridge Housings and Elements

Media:	Polypropylene
Material:	100% Meltblown Micro PP Fiber
Absolute Micron Ratings:	1µm, 3µm, 5µm, 10µm, 20µm, 25µm, 30µm, 50µm, 75µm, 100µm, 150µm
Inside Diameter:	1.1 inch (28 mm)
Outside Diameter:	2.5 inch (63 mm)
Maximum Differential Pressure and Temperature:	58 psi at 68°F (4 bar at 20°C) 29 psi at 140°F (2 bar at 60°C) 14 psi at 176°F (1 bar at 80°C)
Element Change Out:	29 psid (2.1 bar diff)
Maximum Operating Temperature:	160°F (70°C)
Efficiency:	99.98%

Filter Model Number Selection

How to Build a Valid Model Number for Cartridge Housings and Elements:

BOX 1	BOX 2	BOX 3	BOX 4	BOX 5	BOX 6	BOX 7
ACE						

Example: NOTE: One option per box

BOX 1	BOX 2	BOX 3	BOX 4	BOX 5	BOX 6	BOX 7	
ACE	3	10	25		2SD	NA	= ACE310252SDNA

BOX 1

Element
DCE = Polypropylene Coreless
ACE = Polypropylene with core Polypropylene

BOX 2

Micron Rating
S2 = 0.2 µm
S45 = 0.45 µm
1 = 1 µm
2 = 2 µm
5 = 5 µm
10 = 10 µm
20 = 20 µm
40 = 40 µm

BOX 3

Length (in.)
10 = 10.0"
20 = 20.0"
30 = 30.0"
40 = 40.0"

BOX 4

End Cap Code
B = DOE w/ Gasket and Caps
C = 222 w/ Spear
D = 222 w/ Closed Flat Cap
E = 222 w/ Spring
F = 226 w/ Closed Flat Cap
G = 226 w/ Spear
H = 226 w/ Spring
J = Polypropylene Extender
L = Spring
N = SOE Recessed Cap, internal 213 O-Ring
Omit = DOE for knife edge seal
2SD = SOE, 222 O-ring seal, w/ flat top*
2SF = SOE, 222 O-ring, w/ fin*
2SPR = SOE, 222 O-ring seal, w/ spring top*
6SD = SOE, 226 O-ring seal, w/ flat top*

BOX 5

O-Rings
Omit = None
B = Buna N
E = EPDM (EPR)
S = Silicone
V = FKM Fluorolastomer

BOX 7

Certification
Omit = None
NA = NSF/ANSI 61 w/ core only

Filter Data

Filter and Media are sold separately.

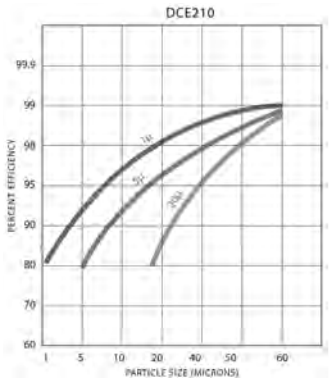

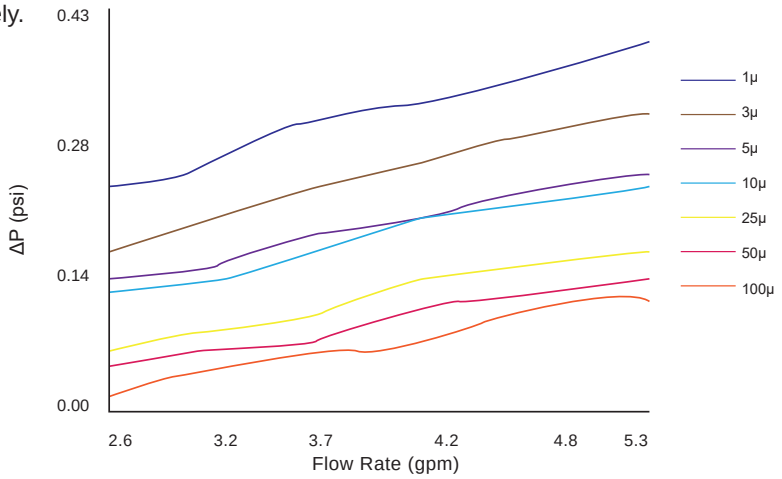

PP

High Purity/Absolute Pleated Cartridges

35 psi
2.4 bar

Our Pleated Polypropylene Cartridges are designed to hold 6.5 square feet of filtration media, making these a great value. These cartridges are constructed with 100% polypropylene materials and are assembled using the latest thermal bonding equipment. Efficiency Rating is 99.98% (ß5000).

Typical Applications:

- Optimal for DEF Solutions
- Food and Beverage
- Photographic
- Deionized Water
- Reverse Osmosis Membrane
- Prefiltration
- Process Water
- Fine Chemicals
- Wastewater

Specifications

Media:	Polypropylene
Material:	100% Meltblown Micro PP Fiber
End Caps:	Polypropylene
Center Core:	Polypropylene
Outer Support Cage:	Polypropylene
O-Rings/Gaskets:	Buna, Viton®, EPDM
Length:	10 to 40 in. (25.4 to 101.6 cm) nominal
Outside Diameter:	2.70 in. (7.0 cm) nominal
Element Change Out:	35 psi (2.4 bar)
Maximum Operating Temperature:	180°F (82°C)
Efficiency:	99.98%

Pressure Drop

Information Based on Flow Rate and Viscosity

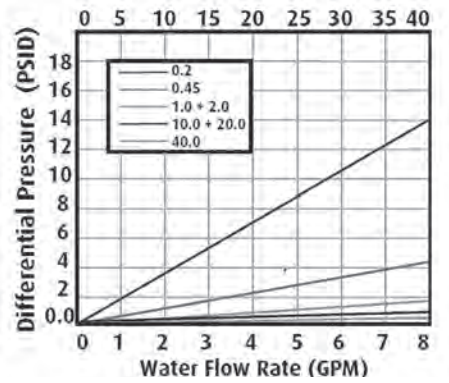

High Purity Pleated Polypropylene Cartridges

How to Build a Valid Model Number for a High Purity Pleated Polypropylene Cartridge:

BOX 1	BOX 2	BOX 3	BOX 4	BOX 5	BOX 6
PP					

Example: NOTE: One option per box

BOX 1	BOX 2	BOX 3	BOX 4	BOX 5	BOX 6	
PP	05	40	D	T	S	= PP0540DVTS

BOX 1

Element
PP = Pleated polypropylene High Efficiency
PPA = Pleated polypropylene Absolute

BOX 2

Micron Rating
S2 = 0.2 µm
S45 = 0.45 µm
1 = 1 µm
2 = 2 µm
5 = 5 µm
10 = 10 µm
20 = 20 µm
40 = 40 µm

BOX 3

Length (in.)
10 = 10.0"
20 = 20.0"
30 = 30.0"
40 = 40.0"

BOX 4

End Cap Code
B = DOE w/ Gasket and Caps
C = 222 w/ Spear
D = 222 w/ Closed Flat Cap
E = 222 w/ Spring
F = 226 w/ Closed Flat Cap
G = 226 w/ Spear
H = 226 w/ Spring
J = Polypropylene Extender
L = Spring
N = SOE Recessed Cap, internal 213 O-Ring

BOX 5

O-Rings
B = Buna
E = EPDM
S = Silicone
V = Viton
T = Teflon Encapsulated Viton

BOX 6

Options
I = Stainless Steel
E = EPDM insert
S = Silicone HP - Heavy Poly Core

CH1 Cartridge Housings and Elements

Cartridge Housing

1-5 gpm
3.6-18.33 L/min

125 psi
9 bar

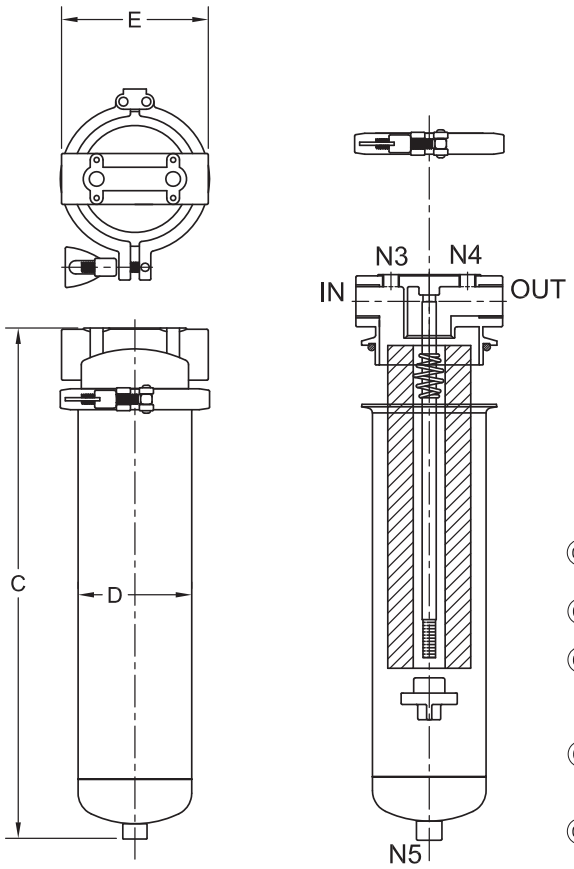

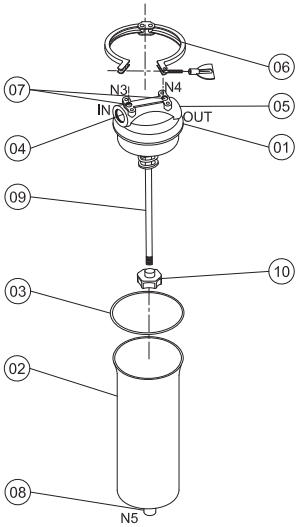

No.	Description	Q'ty
1	Cap	1
2	Shell	1
3	O-Ring	1
4	Port(Inlet)	1
5	Port(Outlet)	1
6	Clamp	1
7	Vent	1
8	Drain	1
9	Screw Stay	1
10	Screwed Nut	1

Operating T.	Operating P.
75 ℃	7 kg/cm²

NOTE:
Drawings may change without notice. Contact factory for certified drawings.

Dimensions

Model	C inch (mm)	D inch (mm)	E inch (mm)	N3/N4	N5
CH1210	15.8 (401.32)	3.5 (88.9)	4.5 (114.3)	¼"	¼"
CH1220	25.8 (655.32)	3.5 (88.9)	4.5 (114.3)	¼"	¼"
CH1230	35.8 (909.32)	3.5 (88.9)	4.5 (114.3)	¼"	¼"

Specifications

	CH12
Max. Flow Rate:	5-10 gpm (18.33 to 36.66 L/min
Max. Working Pressure:	100 psi (7 bar)
Max Temperature:	167°F (75°C)
Housing Material:	Polypropylene
O-Ring Material:	Buna N
Initial Pressure Drop:	1 psi at 10 gpm
Type of Element Accepted	DOE

Cartridge Housings and Elements

How to Build a Valid Model Number for a Single Cartridge PP Housing 2.5":

BOX 1	BOX 2	BOX 3	BOX 4	BOX 5	BOX 6	BOX 7	BOX 8	BOX 9
CH								

Example: NOTE: One option per box

BOX 1	BOX 2	BOX 3	BOX 4	BOX 5	BOX 6	BOX 7	BOX 8	BOX 9	
CH	1	2	10	PP	04	B	1	V	= CH1210PP04B1V

BOX 1

Filter Series
CH

BOX 1

# of Cartridges
1

BOX 3

Cartridge Diameter
2 = 2" diameter

BOX 4

Cartridge Length
10 = 10"
20 = 20"
30 = 30"
40 = 40"

BOX 5

Housing Material
PP* = Polypropylene head and bowl
4 = SUS304
6 = SUS316

*Polypro is only available in 100 psi.

BOX 6

Connection
04 = 1/2"
06 = 3/4"
10 = 1"

BOX 7

O-Ring
B = Buna N
E = EPDM
S = Silicone
V = Viton

BOX 8

Pressure
0 = 100 psi
1 = 150 psi

BOX 9

Options
N = Flat Bottom
P = PR Button in Cap
V = Drain with Plug

CH3-CH7 Cartridge Housings and Elements

0-123 gpm
0-467 L/min

100 psi
7 bar

150 psi
10 bar

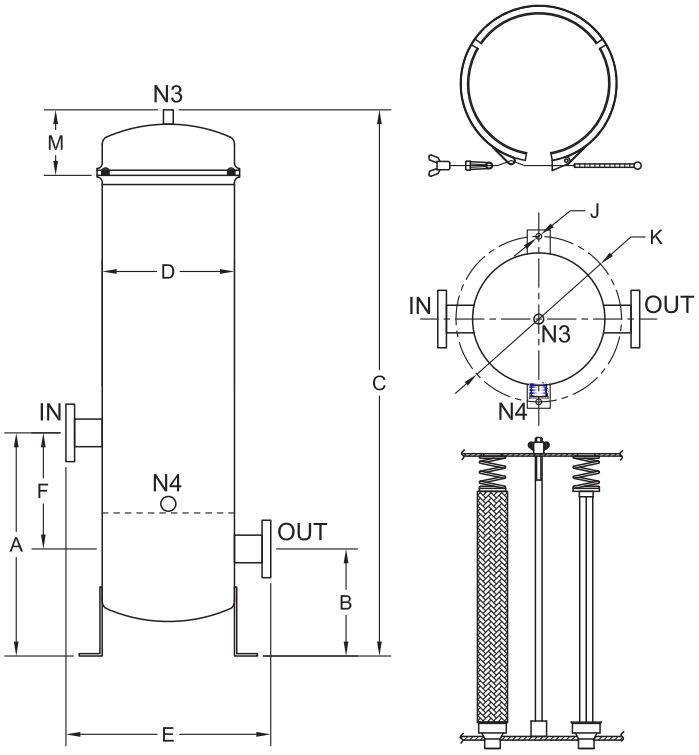

NOTE: Drawings may change without notice. Contact factory for certified drawings.

Dimensions

	Cartridge Qty	Cartridge Length	A inch (mm)	B inch (mm)	C inch (mm)	D øinch (mm)	E inch (mm)	F inch (mm)	J øinch (mm)	K øinch (mm)	M inch (mm)	N3 inch	N4 inch
CH3220	3	20	11.02 (280)	4.72 (120)	35.04 (890)	7.09 (180)	11.81 (300)	6.30 (160)	0.35 (9)	9.29 (236)	3.35 (85)	¼	¾
CH3230	3	30	11.02 (280)	4.72 (120)	45.08 (1145)	7.09 (180)	11.81 (300)	6.30 (160)	0.35 (9)	9.29 (236)	3.35 (85)	¼	¾
CH7220	7	20	11.02 (280)	4.72 (120)	35.04 (890)	9.13 (232)	13.86 (352)	6.30 (160)	0.35 (9)	9.29 (236)	3.35 (85)	¼	¾
CH7230	7	30	11.02 (280)	4.72 (120)	45.08 (1145)	9.13 (232)	13.86 (352)	6.30 (160)	0.35 (9)	9.29 (236)	3.35 (85)	¼	¾
CH7240	7	40	11.02 (280)	4.72 (120)	55.12 (1400)	9.13 (232)	13.86 (352)	6.30 (160)	0.35 (9)	9.29 (236)	3.35 (85)	¼	¾

Specifications

Number of Elements per Housing:	3 or 7 Elements, 2" Diameter
Max. Working Pressure:	100 psi (7 bar)
Max Temperature:	167°F (75°C)
Housing Material:	Stainless Steel (304 or 316)
Type of Elements Accepted:	DOE (Double Open Ended), -222 O-ring

Cartridge Housings and Elements

Flow Rate and Weight

Model #	Flow Rate	Dry Weight
CH3220	0-26 gpm (100 l / min)	40 lbs (18kg)
CH3230	0-40 gpm (150 l / min)	44 lbs (20kg)
CH7220	0-62 gpm (233 l /min)	55 lbs (25kg)
CH7230	0-92 gpm (350 l / min)	62 lbs (28kg)
CH7240	0-123 gpm (467 l / min)	68 lbs (31kg)

Filter Model Number Selection

How to Build a Valid Model Number for a Multi-Cartridge Housing, 100 psi:

BOX 1	BOX 2	BOX 3	BOX 4	BOX 5	BOX 6	BOX 7	BOX 8	BOX 9
CH								

Example: NOTE: One option per box

BOX 1	BOX 2	BOX 3	BOX 4	BOX 5	BOX 6	BOX 7	BOX 8	BOX 9	
CH	4	2	10	6	15	B	0	7	= CH14210615B07

BOX 1

Filter Series
CH

BOX 2

# of Cartridges	
3 =	3 pieces
4 =	4 pieces
12 =	12 pieces

BOX 3

Cartridge Diameter	
2 =	2" diameter

BOX 4

Cartridge Length	
05 =	5"
10 =	10"
20 =	20"
30 =	30"
40 =	40"

BOX 5

Housing Material	
4 =	SUS304
6 =	SUS316
7 =	SUS316L

BOX 6

Connection	
10 =	1"
15 =	1.5"
20 =	2"
25 =	2.5"
30 =	3"
40 =	4"

BOX 7

O-Ring	
B =	Buna N
E =	EPDM
S =	Silicone
V =	Viton

BOX 8

Pressure	
0 =	100 psi
1 =	150 psi

BOX 9

Options	
1 =	Standard Flat Gasket Double Open Ends & 2 - 222 O-ring Fin/Flat
7 =	No Bayonet 2-226 O-ring Fin/Flat
9 =	2-226 O-ring Fin/Flat

NOTE: Elements must be purchased separately.

CH3-CH12 Cartridge Housings and Elements

150 psi
10 bar

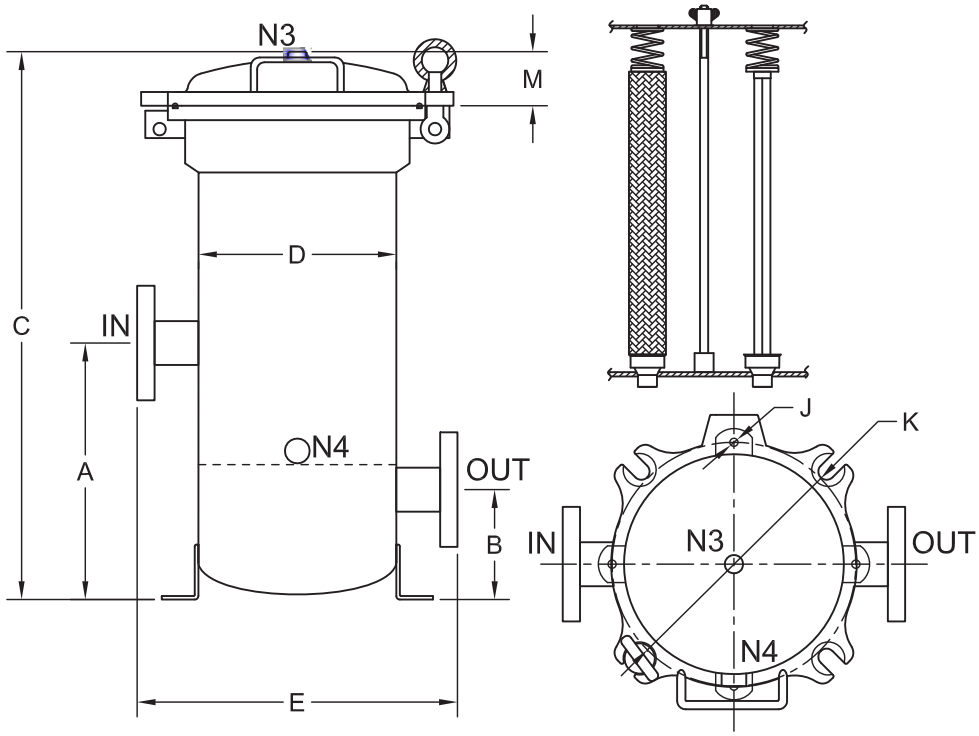

NOTE: Drawings may change without notice. Contact factory for certified drawings.

Dimensions

	Cartridge Qty	Cartridge Length	A inch (mm)	B inch (mm)	C inch (mm)	D øinch (mm)	E inch (mm)	J øinch (mm)	K øinch (mm)	M inch (mm)	N3 inch	N4 inch
CH3220	3	20	11.02 (280)	4.72 (120)	33.19 (843)	7.13 (181)	11.81 (300)	0.35 (9)	10.47 (266)	2.17 (55)	¼	¾
CH3230	3	30	11.02 (280)	4.72 (120)	43.23 (1098)	7.13 (181)	11.81 (300)	0.35 (9)	10.47 (266)	2.17 (55)	¼	¾
CH3240	3	40	11.02 (280)	4.72 (120)	53.27 (1353)	7.13 (181)	11.81 (300)	0.35 (9)	10.47 (266)	2.17 (55)	¼	¾
CH7220	7	20	11.02 (280)	4.72 (120)	33.58 (853)	9.13 (232)	14.09 (358)	0.35 (9)	11.34 (288)	2.56 (65)	¼	¾
CH7230	7	30	11.02 (280)	4.72 (120)	43.62 (1108)	9.13 (232)	14.09 (358)	0.35 (9)	11.34 (288)	2.56 (65)	¼	¾
CH7240	7	40	11.02 (280)	4.72 (120)	53.66 (1363)	9.13 (232)	14.09 (358)	0.35 (9)	11.34 (288)	2.56 (65)	¼	¾

Specifications

Number of Elements per Housing:	3 or 12 Elements, 2" Elements
Max. Working Pressure:	150 psi (10 bar)
Max Temperature:	167°F (75°C)
Housing Material:	Stainless Steel (304 or 316)
Type of Elements Accepted:	DOE (Double Open Ended), -222 O-ring

Cartridge Housings and Elements

Model #	Flow Rate	Volume	Dry Weight
CH3220	0-26 gpm (100 l / min)	7.13 gal (27L)	66 lbs (30kg)
CH3230	0-40 gpm (150 l / min)	9.51 gal (36L)	77 lbs (35kg)
CH3240	0-53 gpm (200 l / min)	11.88 gal (45L)	88 lbs (40kg)
CH7220	0-62 gpm (233 l /min)	8.98 gal (34L)	77 lbs (35kg)
CH7230	0-92 gpm (350 l / min)	11.88 gal (45L)	88 lbs (40kg)
CH7240	0-123 gpm (467 l / min)	14.52 gal (55L)	101 lbs (46kg)

How to Build a Valid Model Number for a Multi-Cartridge Housing, 100 psi:

BOX 1	BOX 2	BOX 3	BOX 4	BOX 5	BOX 6	BOX 7	BOX 8	BOX 9
CH								

Example: NOTE: One option per box

BOX 1	BOX 2	BOX 3	BOX 4	BOX 5	BOX 6	BOX 7	BOX 8	BOX 9	
CH	4	2	10	6	15	B	0	7	= CH14210615B07

BOX 1

Filter Series
CH

BOX 2

# of Cartridges
3 = 3 pieces
4 = 4 pieces
Up To
12 = 12 pieces

BOX 3

Cartridge Diameter
2 = 2" diameter

BOX 4

Cartridge Length
10 = 10"
20 = 20"
30 = 30"
40 = 40"

BOX 5

Housing Material
4 = SUS304
6 = SUS316
7 = SUS316L

BOX 6

Connection
10 = 1"
15 = 1.5"
20 = 2"
25 = 2.5"
30 = 3"
40 = 4"

BOX 7

O-Ring
B = Buna N
E = EPDM
S = Silicone
V = Viton

BOX 8

Pressure
1 = 150 psi

BOX 9

Options
1 = Standard Flat Gasket Double Open Ends & 2 - 222 O-ring Fin/Flat
7 = No Bayonet 2-226 O-ring Fin/Flat
9 = 2-226 O-ring Fin/Flat

NOTE: elements must be purchased separately.

CH13-CH173 Cartridge Housings and Elements

5-40 gpm
18.33-150 L/min

150 psi
10 bar

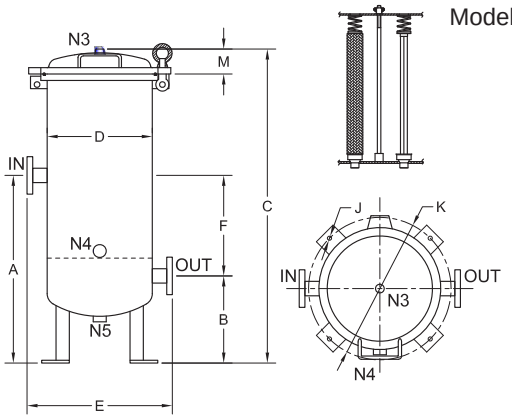

Model CH12240

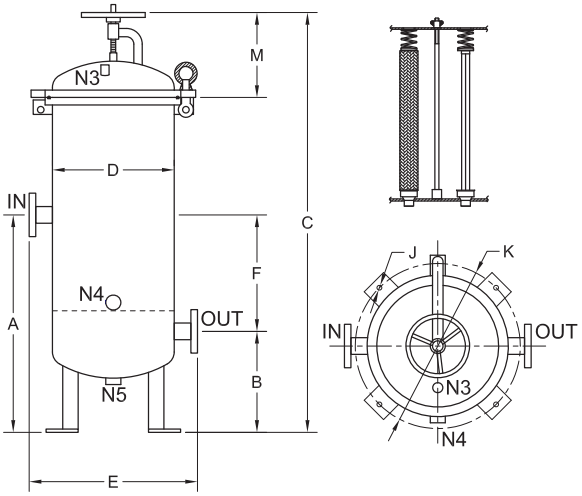

Models CH14240 - CH24240

Dimensions

	Cartridge Qty	Cartridge Length	A inch (mm)	B inch (mm)	C inch (mm)	D øinch (mm)	E inch (mm)	J øinch (mm)	K øinch (mm)	M inch (mm)	N3 inch	N4 inch
CH12240	12	40	27.56 (700)	13.78 (350)	68.03 (1728)	12.01 (305)	19.69 (500)	0.55 (14)	16.14 (410)	6.02 (153)	½	1
CH14240	14	40	27.56 (700)	13.78 (350)	76.77 (1950)	15.98 (406)	23.86 (606)	0.55 (14)	20.31 (516)	14.96 (380)	½	1
CH18240	18	40	27.56 (700)	13.78 (350)	76.77 (1950)	15.98 (406)	23.86 (606)	0.55 (14)	20.31 (516)	14.96 (380)	½	1
CH20240	20	40	27.56 (700)	13.78 (350)	76.77 (1950)	15.98 (406)	23.86 (606)	0.55 (14)	20.31 (516)	14.96 (380)	½	1
CH24240	24	40	27.56 (700)	13.78 (350)	76.97 (1955)	19.13 (486)	27.01 (686)	0.55 (14)	23.46 (596)	15.16 (385)	½	1

Specifications

Number of Elements per Housing:	12, 14, 18, 20, or 24, 2" Diameter
Max. Working Pressure:	150 psi (10 bar)
Max Temperature:	167°F (75°C)
Housing Material:	Stainless Steel (304 or 316)

*Max flow rate is dependent on type of media, particle selection required, fluid viscosity and volume of contamination.

Flow Rate Volume and Weight

Model #	Flow Rate	Volume	Dry Weight
CH12240	0-200 gpm (755 l / min)	28.00 gal (107L)	187 lbs (85kg)
CH14240	0-240 gpm (900 l / min)	50.00 gal (198L)	275 lbs (125 kg)
CH18240	0-310 gpm (1170 l / min)	50.00 gal (198L)	275 lbs (125 kg)
CH20240	0-350 gpm (1320 l / min)	50.00 gal (198L)	275 lbs (125 kg)
CH24240	0-415 gpm (1565 l / min)	75.00 gal (286L)	320 lbs (145 kg)

Filter Model Number Selection

How to Build a Valid Model Number for a Multi-Cartridge Housing:

BOX 1	BOX 2	BOX 3	BOX 4	BOX 5	BOX 6	BOX 7	BOX 8	BOX 9
CH								

Example: NOTE: One option per box

BOX 1	BOX 2	BOX 3	BOX 4	BOX 5	BOX 6	BOX 7	BOX 8	BOX 9	
CH	4	2	10	6	15	B	0	7	= CH14210615B07

BOX 1

Filter Series
CH

BOX 2

# of Cartridges
13 = 13 pieces
14 = 14 pieces
15 = 15 pieces
Up To
173 = 173 pieces

BOX 3

Cartridge Diameter
2 = 2" diameter

BOX 4

Cartridge Length
10 = 10"
20 = 20"
30 = 30"
40 = 40"

BOX 5

Housing Material
4 = SUS304
6 = SUS316
7 = SUS316L

BOX 6

Connection
10 = 1"
15 = 1.5"
20 = 2"
25 = 2.5"
30 = 3"
40 = 4"
Z = 10"
Z1 = 11"
Up To
Z5 = 15"

BOX 7

O-Ring
B = Buna N
E = EPDM
S = Silicone
V = Viton

BOX 8

Pressure
1 = 150 psi

BOX 9

Options
1 = Standard Flat Gasket Double Open Ends & 2 - 222 O-ring Fin/Flat
7 = No Bayonet 2-226 O-ring Fin/Flat
9 = 2-226 O-ring Fin/Flat

Notes Section:

Section 4: MEDIA FILTER

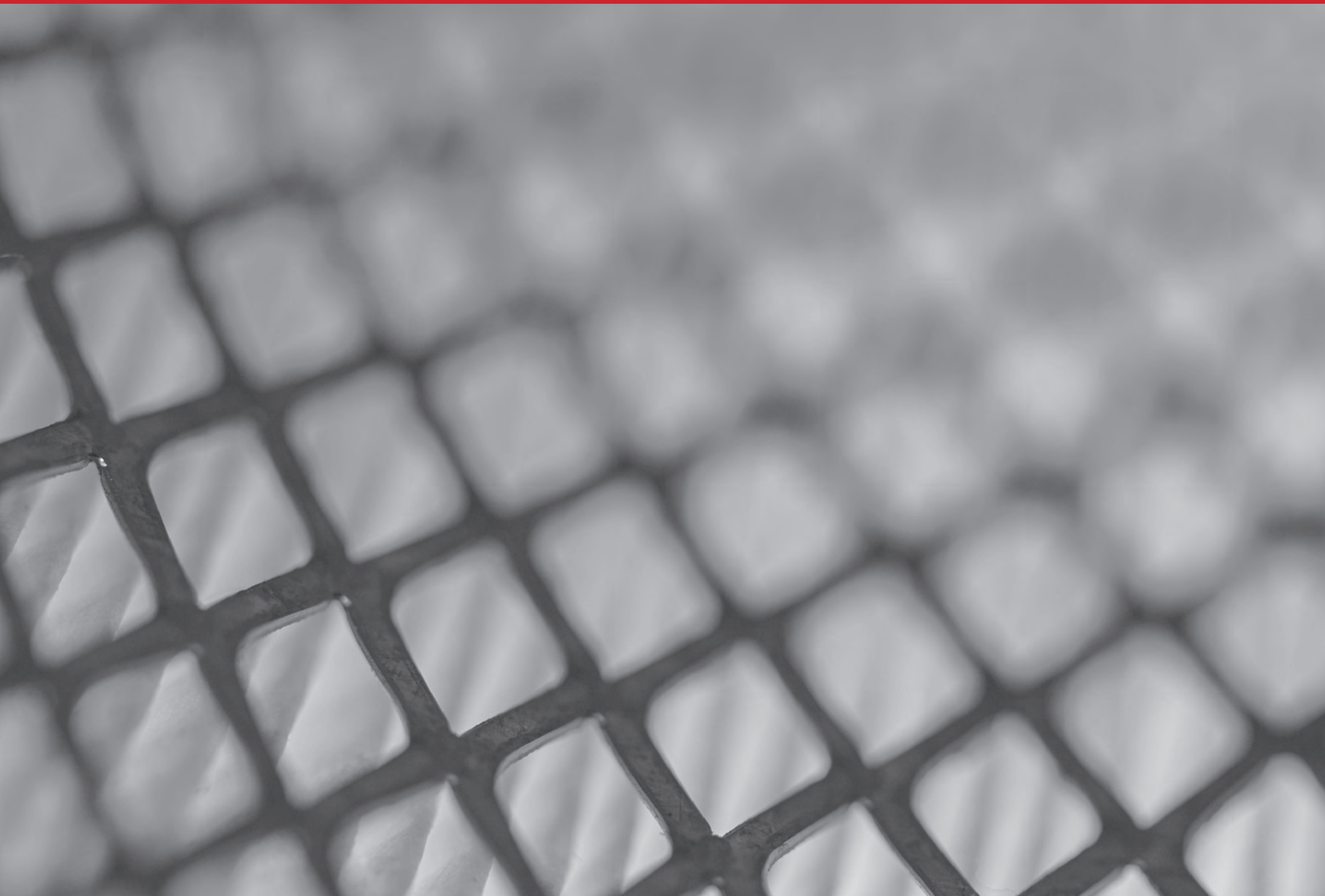

RMF Rolling Media Filtration

70-600 gpm
268-2270 L/min

The Rolling Media Filter (RMF) provides a highly efficient and reliable means of removing solids from process liquids. This filter is a non pressurized system which is economical and easy to operate. It can handle occasional system upsets or overloads without blinding the filter media.

The RMF is a fully automatic system that ensures efficient cleaning of any process fluid. It optimizes the amount of media used at the same time. The solids are discharged as a cake for easy handling and disposal.

The liquid to be filtered is pumped or gravity fed into inlet. It is then distributed to the flood box, which slows the velocity and discharges the liquid over the entire width of the filter media. The liquid filters through the media, and the solids are left behind collecting on the filter media surface. The clean liquid is discharged through the outlet into a tank or discharged into an open system.

As the solids are collected on the filter media, the liquid level rises to a preset level. A level sensor initiates an index cycle and fresh media is indexed displacing a portion of the spent media. The media is then discharged to a waste container.

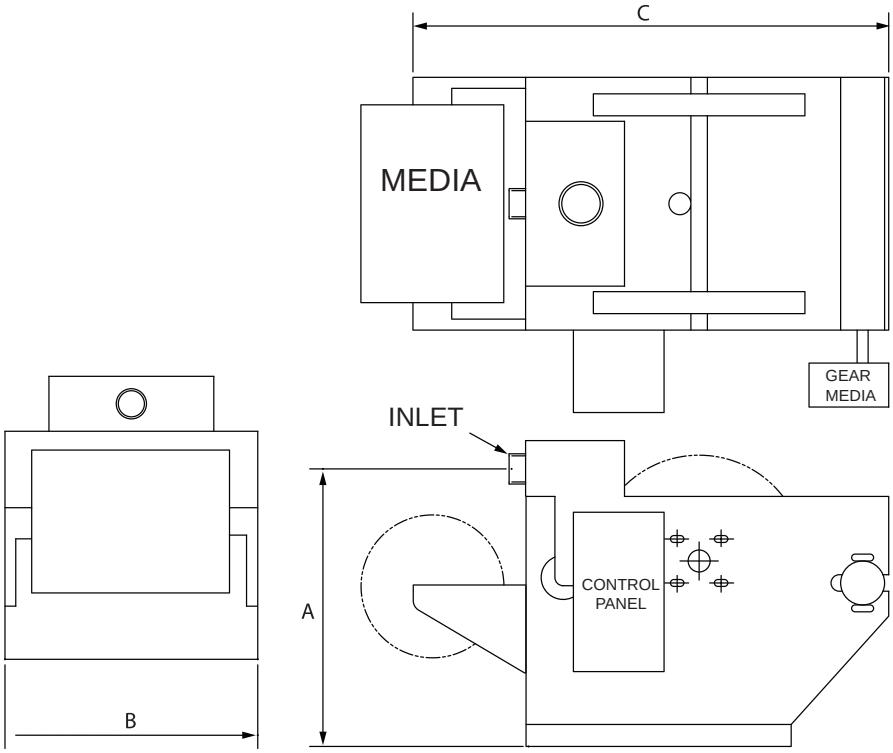

Dimensions

	A		B		C		Flow Rate
	inches	mm	inches	mm	inches	mm	
RMF70	37.00	940	30.00	762	43.25	1099	71
RMF145	34.25	870	40.00	1016	52.75	1340	146
RMF210	34.25	870	52.00	1321	52.75	1340	212
RMF275	34.25	870	64.00	1626	52.75	1340	275
RMF300	41.75	1060	52.00	1321	65.75	1670	300
RMF350	34.25	870	73.00	1854	52.75	1340	350
RMF400	41.75	1060	83.00	1626	65.75	1670	400
RMF500	41.75	1060	73.00	1854	65.75	1670	500
RMF600	41.75	1060	83.00	2108	65.75	1670	600

Construction Material:	Epoxy coated, Carbon steel
Conveyor Material:	304 stainless steel
Seal Wheels:	Aluminum

Specifications SW
DCE/ACE
PP
CH1
CH3 - CH7
Filter Model Number Selection CH3 -CH12
CH13-CH173
RMF
Replacement Parts for RMF

How to Build a Valid Model Number for a Rolling Media Filtration:

BOX 1	BOX 2	BOX 3	BOX 4	BOX 5	BOX 6
RMF					

Example: NOTE: One option per box

BOX 1	BOX 2	BOX 3	BOX 4	BOX 5	BOX 6	
RMF	70	AL	CS	N	C	= RMF70ALCSNC

BOX 1

Filter Series
RMF

BOX 2

Filter Size
70 = 70 gpm
145 = 145 gpm
210 = 210 gpm
275 = 275 gpm
300 = 300 gpm
350 = 350 gpm
400 = 400 gpm
500 = 500 gpm
600 = 600 gpm

BOX 3

Wheel Material
AL = Aluminum
SS = Stainless Steel

BOX 4

Housing Material
CS = Carbon Steel
SS = Stainless Steel

BOX 5

Wheel Seals
N = Neoprene
T = Teflon

BOX 6

Options
O = None
C = Cover
M = Media Recovery System
D = Contamination Dryer

How to Build a Valid Model Number for a Schroeder RMF Media:

BOX 1	BOX 2	BOX 3	BOX 4
RMF			

Example: NOTE: One option per box

BOX 1	BOX 2	BOX 3	BOX 4	
RMF	RM	07	27	= RMFRM0727

BOX 1

Filter Series
RMF

BOX 2

Replacement Type
RM = Roll Media

BOX 3

Micron Rating
07 = 7 µm
12 = 12 µm
14 = 14 µm
18 = 18 µm
28 = 28 µm
50 = 50 µm
200 = 200 µm

BOX 4

Roll Width
27 = 27" Wide (BWC 70/145)
39 = 39" Wide (BWC 210/300)
51 = 51" Wide (BWC 400)
60 = 60" Wide (BWC 500)
70 = 70" Wide (BWC 600)

Notes Section:

Section 5: OIL AND GAS PRODUCTS

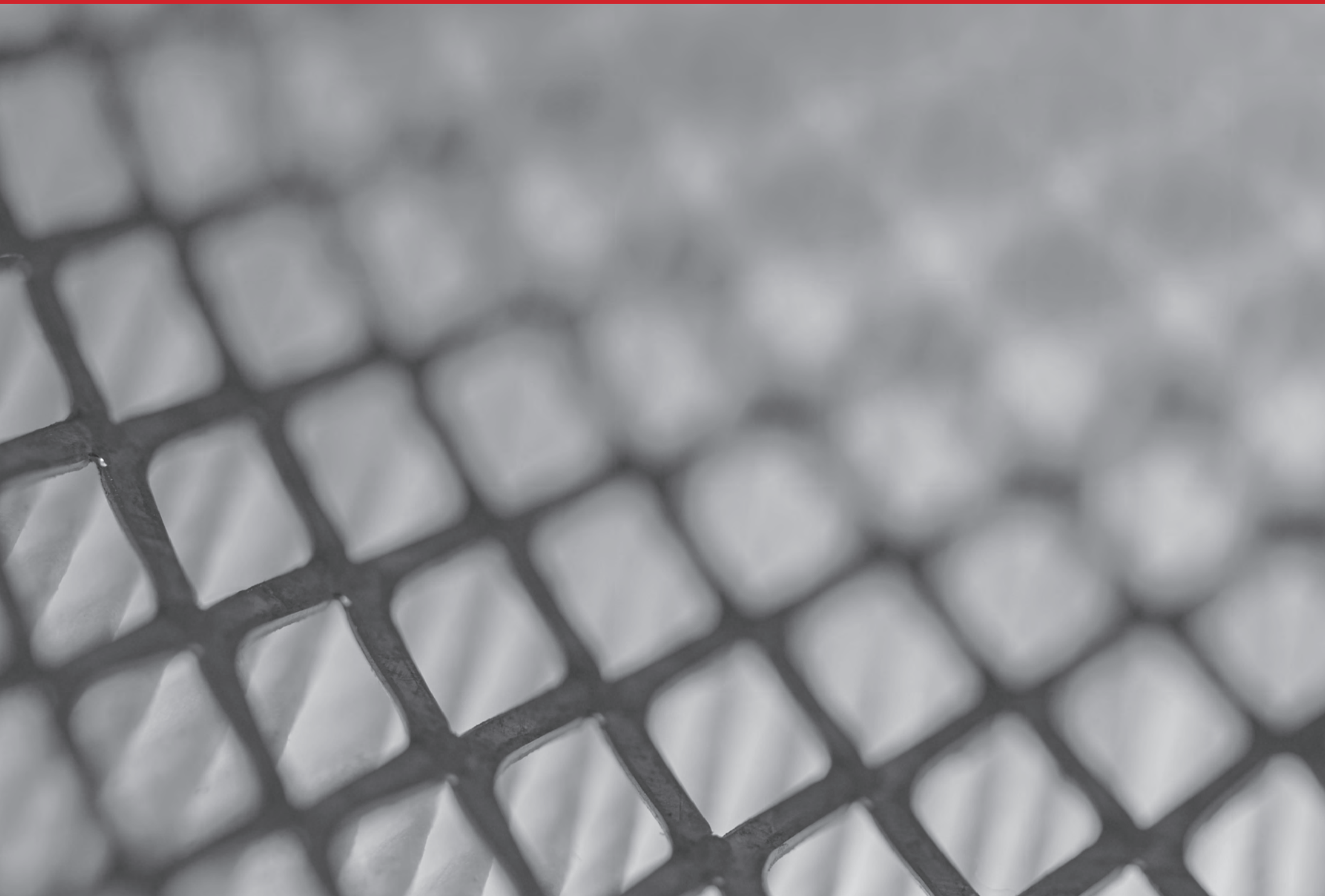

Pit Purification Solutions

The Pit Purification Solution (PPS) is a portable unit providing staged filtration for cleaning drill water. All filters are made of coated carbon steel or non-corrosive stainless steel. The operating system is simple. The water to be cleaned passes through a series of filters providing progressively finer filtration. The final filtration is achieved by bag filtration, which can easily be changed to a micron rating of the user's choice.

The drill water first passes through a twist flow strainer (ATF), which is effective at removing coarse particles through a unique inlet arrangement and housing design that uses a centrifugal separator and an inline filter to separate solids from the fluid. Raw water enters tangentially to create a cyclonic flow. Centrifugal force moves the larger, heavier particles to the housing wall where they are accelerated downward by the decreasing diameter of the housing. While the larger, heavier particles are forced against the outer wall of the housing then down and out of the unit, the lighter, smaller particles can pass through the 200 micron slotted tube element in the center of the housing and move on to the backflushing filter (RF3).

The water then enters a backflushing filter (RF3) that captures solid particulate that are smaller in size. Slotted, conical tube element allows for efficient backwash. The "Wedge Wire" design of the elements provides for a wider opening on the effluent or downstream side of the element. This precludes particles becoming lodged and blinding the element. In the PPS, the RF3 is fitted with 50 micron slotted tube elements. A rotating arm allows a reverse jet of water through the elements to provide a back wash flow to the elements. Because of the way these first two filters operate, they have the added bonus of not requiring the elements to be replaced, and thus can remain functional indefinitely.

Next in line is a duplex bag filter housing, which features an extremely high dirt holding capacity. Filtered water from the RF3 passes to the duplex bag filters. Water passes through a progressively tighter series of bag elements: 25, 15 and 10 micron. Unlike the first two mechanical filters, the bag filters will need to be changed out periodically when they are full or there is indication of pressure drop at the bag housings. From the bag housings, the filtered water is delivered into a storage container for use at the driller's discretion.

The PPS can also include an optional last filter, the Schroeder Qsize Filter. This filter, which utilizes element cartridges that are 39" in length, is available in several micron ratings, and can provide another level of fine filtration if necessary.

Features

- Provides a cost-effective means to filter wastewater from drilling operations
- On-site filtration helps to mitigate costly hauling charges
- Promotes the closed-loop water reuse concept (protects local resources and offers cost reduction to the drilling industry)

Notes Section:

Section 6: MINING PRODUCTS

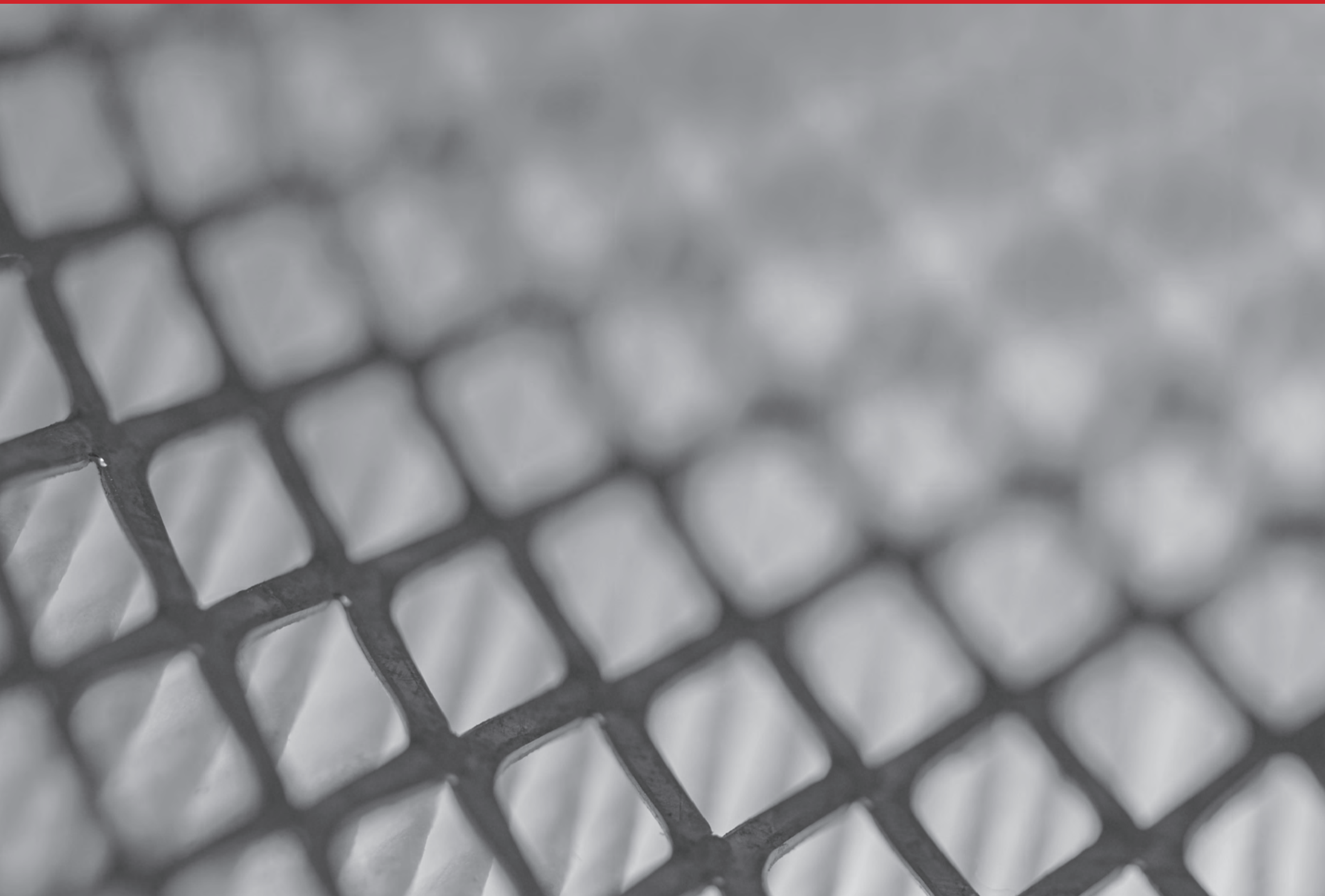

Mining Products

Introduction

For 65 years, Schroeder Industries has been providing superior filtration solutions to the mining industry. With the addition of the Longwall High Pressure Filter (LW60) and numerous BestFit™ elements for longwall shields and pump cars (MSB and SBF) to its product line, Schroeder is your turnkey filtration supplier for all mining applications.

Detailed product information on the LW60 and the BestFits for lining applications is provided on the following pages. For information on the RF3 backflushing filter, consult Schroeder's Process Filtration Catalog (L-2728). For information on the WQLF15, QT and QLF15/QF15, please consult Schroeder's Filtration Products Catalog (L-2520).

Turnkey Filtration

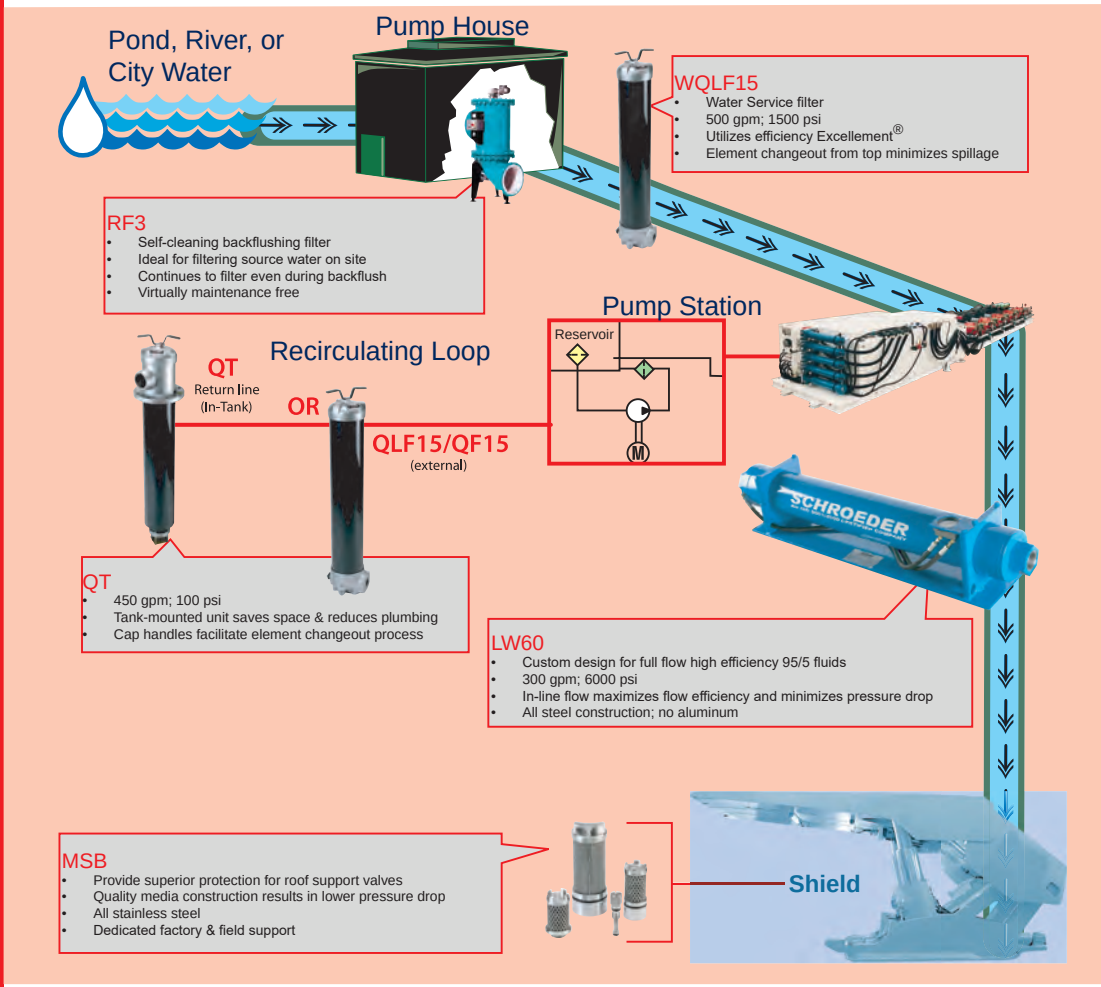

Mining Products

Schroeder Industries currently manufactures over 1,800 BestFit™ performance replacement elements. In addition, Schroeder produces all of the technical data to support the sale of these products. The BestFit™ family consists of standard elements, cartridge repair elements and the new SchroederSpun process filtration elements, as well as, mining specific elements. The following products are currently available for the mining industry:

Longwall Pump Car BestFits™

Schroeder BestFit™ P/N	Micron Rating
MSB-1394-2050B	50
MSB-1394-20100B	100
MSB-1394-20200B	200
SBF-SALL-40Z150B	150
SBF-SALL-40Z10B	10
SBF-WS3L-150PSB	150
SBF-WS3L-M150B	150
SBF-PF3L-Z12B	12
SBF-WE3L-Z60B	60
SBF-SALL-100PSB	100
SBF-SALL-250PSB	250

Shield Element BestFits™

Schroeder BestFit™ P/N	Micron Rating
MSB-05841-340B	40
MSB-1298-280B	80
MSB-1330-3100B	100
MSB-1330-325B	25
MSB-1330-340B	40
MSB-1330-380B	80
MSB-3060-340B	40
MSB-3070-2100	100
MSB-3070-225	25
MSB-3070-240	40
MSB-3070-280	80
MSB-3077-525B	25
MSB-3077-540B	40
MSB-3176-225B	25
MSB-3185-425B	25
MSB-10266-5100B	100

LW60 Longwall Filter

300 gpm
1135 L/min

6000 psi
400 bar

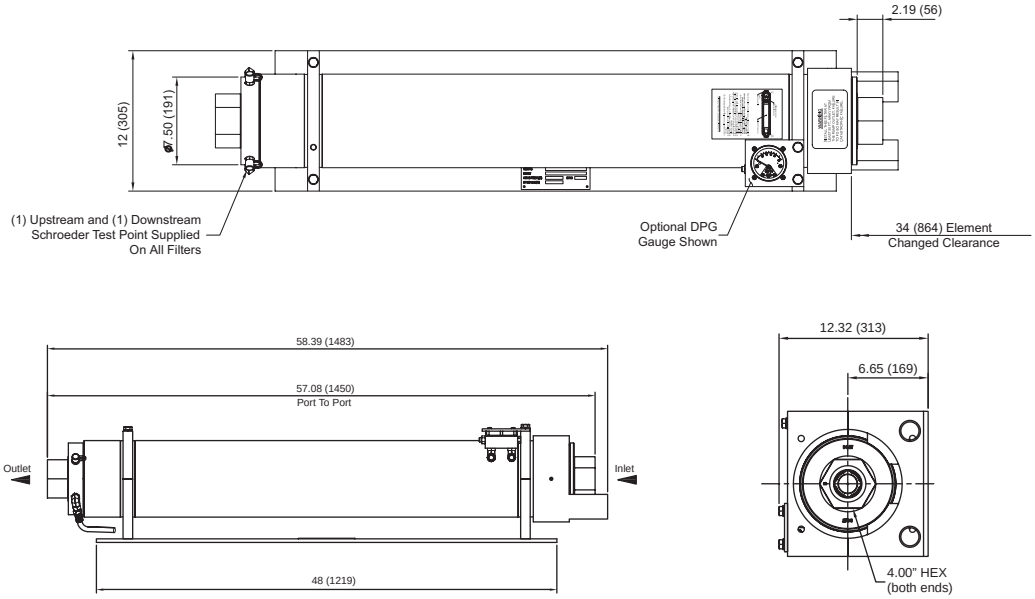

Filter Housing Specifications

Flow Rate:	Up to 300 gpm (1135 L/min) for use with 95/5 fluids
Max. Operating Pressure:	6,000 psi (400 bar)
Min. Yield Pressure:	18,000 psi (1240 bar)
Rated Fatigue Pressure:	4500 psi (310 bar)
Temp. Range:	-20°F to 225°F (-29°C to 107°C)
Bypass Setting:	Cracking: 50 psi (3.4 bar) LWN60 non-bypassing model available with high crush element
Porting Cap & Housing Cap:	Steel
Element Change Clearance:	34.0” (864 mm)
Weight:	550 lb (250 kg)

Element Performance Information

Element	Abs. Rating wrt ISO 16889 Using APC calibrated per ISO 11171 B_x (c) 1000	Dirt Holding Capacity (gm)
39ZPZ3V	5.1	449
39ZPZ5V	6.1	359
39ZPZ10V	12.1	429
39ZPZ25V	17.7	284

Element Collapse Rating:	**150 psi (10 bar)**
Flow Direction:	Outside In
Element Nominal Dimensions:	50" (127 mm) O.D. x 38" (365 mm) long

Fluid Compatibility

Specifically designed for use with 95/5 fluids in mining longwall applications

Features

- Horizontal alignment allows straight-through flow, maximizing efficiency and minimizing pressure drop
- Propriety synthetic media designed specifically for the mining industry, Excellement®-MD, provides level of filtration not achievable using alternative wire mesh elements because of their lack of absolute ratings
- Two-inch BSPP ports are easily adaptable to Super Stecko fittings commonly used underground
- Stainless steel bypass valve that ensures smooth integration with 95/5 fluid
- Non-bypassing version available with high crush (4500 psid) cleanable metal mesh (25 micron) element

Element Selection Based on Flow Rate

Pressure	Element Series	Element Part No.	Element selections are predicated on the use of 150 SUS (32 cSt) petroleum based fluid and a 50 psi (3.4 bar) bypass valve.
6000 psi	Z Media	39ZPZ3V	
		39ZPZ5V	
		39ZPZ10V	
		39ZPZ25V	
Flow		gpm	0 100 150 200 250 300
		(L/min)	0 400 600 800 1000 1150

Pressure Drop Information Based on Flow Rate and Viscosity

$\Delta P_{filter} = \Delta P_{housing} + \Delta P_{element}$

Exercise:
Determine ΔP at 250 gpm (950 L/min) LW6039ZPZ3VB32 using 150 SUS (32 cSt) fluid.

Solution:

$\Delta P_{housing}$ = 0.7 psi [0.05 bar]

$\Delta P_{element}$ = 250 x .06 x (150 ÷ 150) = 15.0 psi
or
= [950 x (.06 ÷ 54.9) x (32 ÷32) = 1.1 bar]

ΔP_{total} = 0.7 + 15.0 = 15.7 psi
or
= [0.05 + 1 .1 = 1.15 bar]

$\Delta P_{housing}$

LW60 $\Delta P_{housing}$ for fluids with sp gr = 0.86:

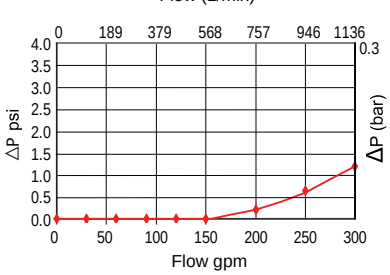

sp gr = specific gravity

$\Delta P_{element}$

$\Delta P_{element}$ = flow x element ΔP factor x viscosity factor

El. ΔP factors @ 150 SUS (32 cSt):

39ZPZ3V	.06
39ZPZ5V	.05
39ZPZ10V	.04
39ZPZ25V	.01

If working in units of bars & L/min, divide above factor by 54.9.

Viscosity factor:
Divide viscosity by 150 SUS (32 cSt).

Sizing of elements should be based on element flow information provided in the Element Selection chart above.
Please note that 95/5 fluid has a lower viscosity than 150 SUS and therefore pressure drops for 95/5 will actually be lower.

Filter Model Number Selection

Filter Series	Element Part Number	Porting	Bypass Setting	Dirt Alarm
LW60	39ZPZ3V 39ZPZ5V 39ZPZ10V 39ZPZ25V	B32=ISO 228 G-2" (2-11 BSPP)	(Omit)= 50 psi Cracking 30 = 30 psi cracking	DPG= Differential Pressure Gauge
LWN60	39ZPMX25V	B32=ISO 228 G-2" (2-11 BSPP)	(Omit)= Blocked	DPG= Differential Pressure Gauge

Mining Specific Elements

The multiple layer construction shown below has evolved from comprehensive laboratory testing to provide extended element life and system protection. Each successive layer performs a distinct and necessary function. The outermost layer is designed to maintain element integrity. Beyond this layer, is a spun-bonded scrim, offering coarse filtration and protection for the more delicate filtering layers within. Multiple sheets of fine filtering media follow, providing intricate passageways for the entrapment of dirt particles. When combined, the layers of the Excellement©-MD filter media provide the ideal formulation for filtration performance used in severe mine duty applications. Through the addition of new materials, the strength of our media has been improved when applied in water based fluids. Soak testing in 95/5 fluids proves that Excellement-MD media scrim and wire mesh maintain their integrity. This new media will provide better protection for the valves on the longwall shields and extend the pilot element's service life in any longwall application.

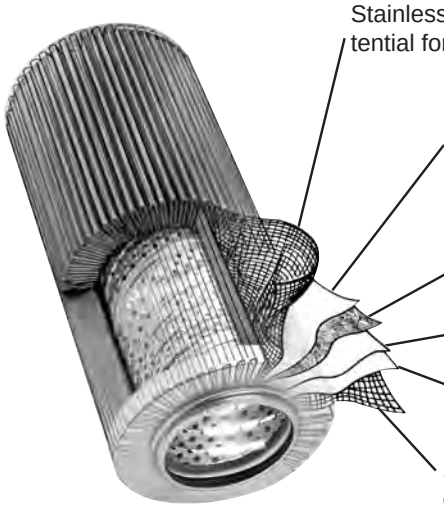

Element Performance Information

Element	Abs. Rating wrt ISO 16889 Using APC calibrated per ISO 11171 B_x (c) 1000	Dirt Holding Capacity (gm)
39ZPZ3V	5.1	449
39ZPZ5V	6.1	359
39ZPZ10V	12.1	429
39ZPZ25V	17.7	284

Element Collapse Rating:	**150 psid (10 bar)**
Flow Direction:	Outside In
Element Nominal Dimensions:	5.0" (127 mm) O.D. x 38" (965 mm) long

*Elements also used in LW60

Mining Specific Elements

Schroeder Part Number: MSB-1298-280B (80 µ)

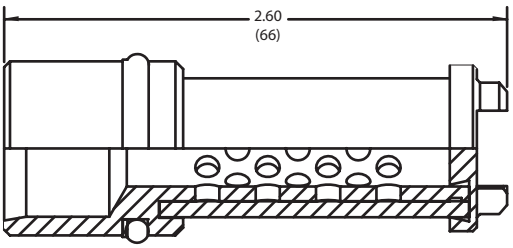

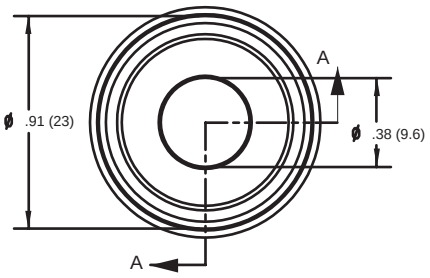

Pressure Drop

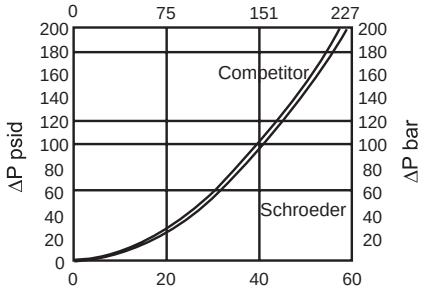

*Contact factory for additional filter ratings

Specifications

Max Pressure:	6,000 psi (400 bar)
Max Differential Pressure:	6,000 psid (400 bar)
Crush Rating:	> 6,000 psid
End Caps:	Stainless Steel
Support Tubes:	Stainless Steel
Metal Mesh:	Stainless Steel Wrap
O-Ring:	Buna N
Back-up Ring:	Nylon
Flow Rating:	See Graph
Filter Rating:	80 micron

Schroeder Part Number: MSB-05841-340B (40 µ)

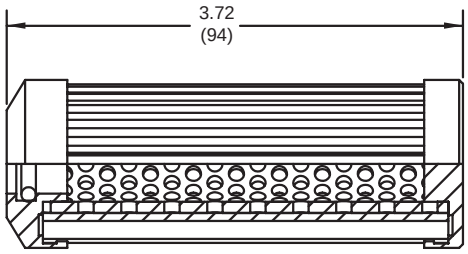

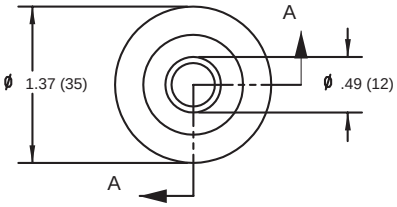

Pressure Drop

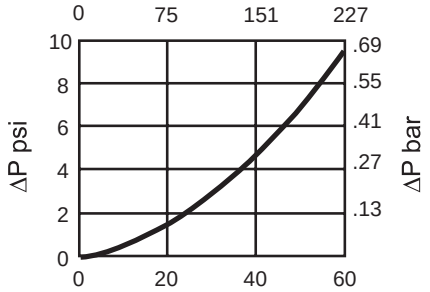

Specifications

Max Pressure:	6,000 psi (400 bar)
Max Differential Pressure:	6,000 psid (400 bar)
Crush Rating:	>6,000 psid
End caps:	Stainless Steel
Support Tubes:	Stainless Steel
Metal Mesh:	Stainless Steel
O-Ring:	Buna N
Flow Rating:	See Graph
Filter Rating:	40 micron

**Contact factory for additional filter ratings*

Mining Specific Elements

Schroeder Part Numbers: MSB-3077-525B (25µ) & MSB-3077-540B (40 µ)

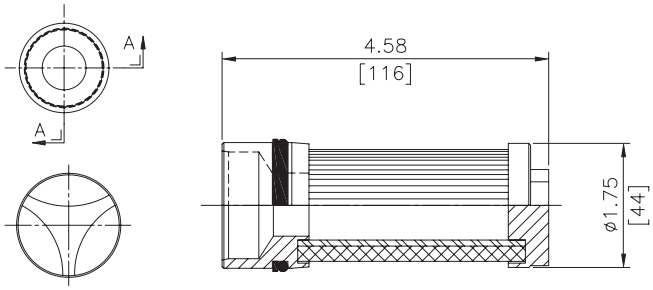

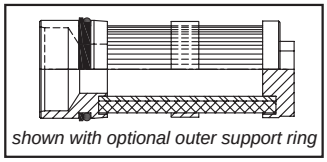

Specifications

Max Pressure:	5,000 psi (350 bar)
Max Flow Rate:	40 gpm (150 L/min)
Filter Rating:	25/40 Micron
End caps:	Stainless Steel
Support Tubes:	Stainless Steel
Metal Mesh:	Stainless Steel Pleated
O-Ring:	Buna N
Back-up Ring:	Nylon

*Contact factory for additional filter ratings

Pressure Drop

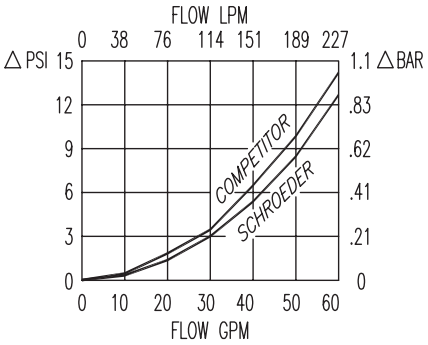

Schroeder Part Number: MSB-1330-325B (25 µ), MSB-1330-340B (40 µ), MSB-1330-380B (80 µ) & MSB-1330-100B (100 µ).

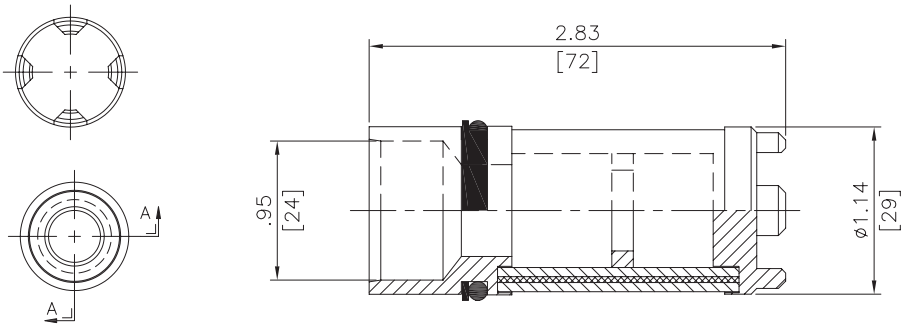

Specifications

Max Pressure:	6,000 psi (400 bar)
Max Differential Pressure:	5000 psid (350 bar)
Max Flow Rate:	48 gpm (180 L/min)
Filter Rating	25/40/80/100 Micron
End Caps:	Stainless Steel
Support Tubes:	Stainless Steel
Metal Mesh:	Stainless Steel Wrap
O-Ring:	Buna N
Back-Up Ring:	Nylon
Support Ring:	Stainless Steel

*Contact factory for additional filter ratings

Pressure Drop

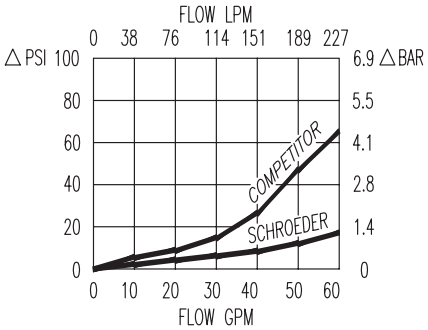

Mining Specific Elements

Schroeder Part Number: MSB-3060-340B (40 µ)

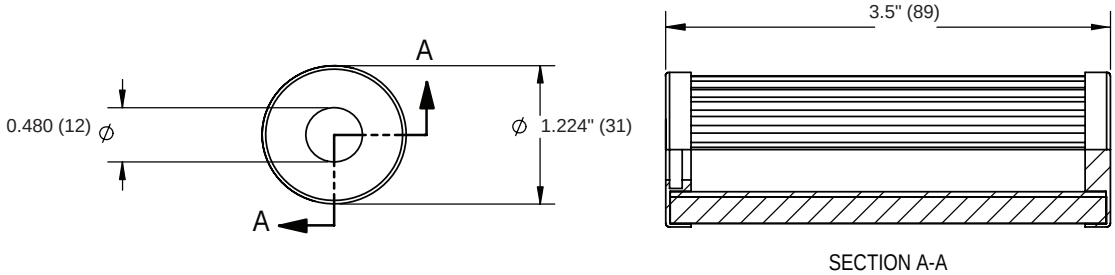

Pressure Drop

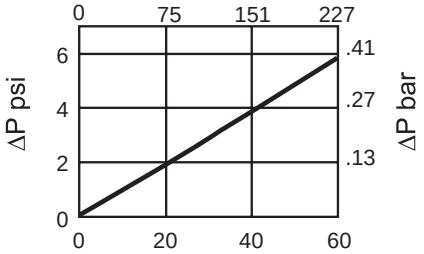

Specifications

Micron Rating:	40 micron
Max Pressure:	4,500 psi (310 bar)
Max Differential Pressure:	4,000 psid (310 bar)
Crush Rating:	>4500 psid
End caps:	Stainless Steel
Support Tubes:	Stainless Steel
Metal Mesh:	Stainless Steel
O-Ring:	Buna N
Flow Rating:	See Graph
Filter Rating:	40 micron

*Contact factory for additional filter ratings

Schroeder Part Number: MSB-3176-225B (25 µ)

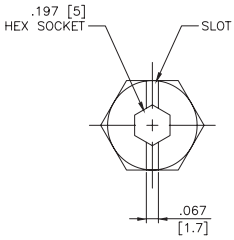

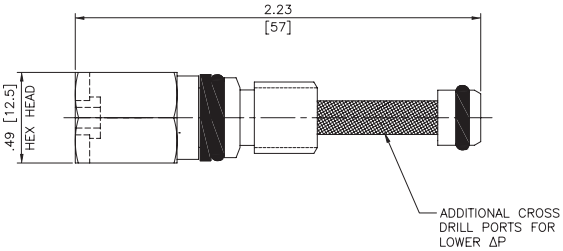

Pressure Drop

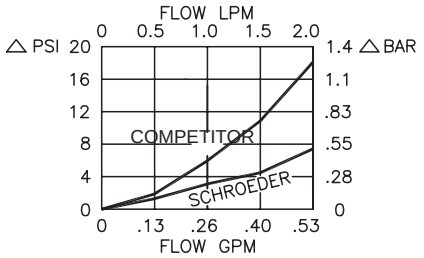

Specifications

Max Pressure:	5,000 psi (350 bar)
Max Differential Pressure:	5,000 psid (350 bar)
Competition fails at:	1500 psid (103 bar)
Max Flow Rate:	0.5 gpm (2 L/min)
Filter Rating:	25 Micron
Body:	Stainless Steel
Metal Mesh:	Stainless Steel Wrap
O-Ring:	Buna N
Back-Up Ring:	Nylon

*Contact factory for additional filter ratings

Mining Specific Elements

Schroeder Part Numbers: SBF-WS3L-150PSB (150 µm) & SBF-WE3L-Z10B (10 µm)

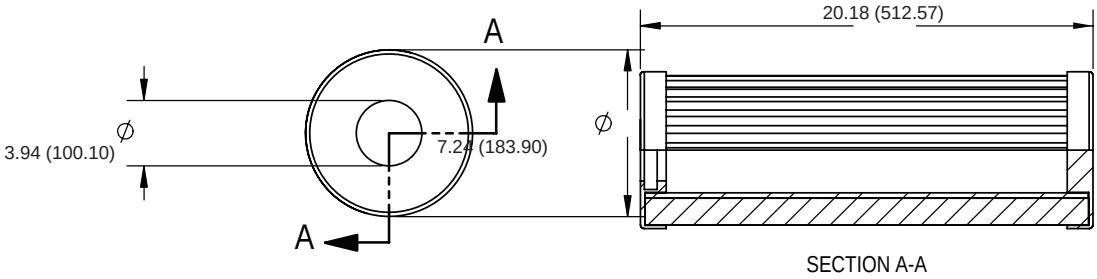

Specifications

Micron Rating:	SBF-WS3L-150PSB: 150µm SBF-WE3L-Z10B: 10µm
Collapse Rating:	150 psid (min)
End Cap:	Anodized Aluminum
Outer Support Tube:	Stainless Steel
Filter Media:	SBF-WS3L-150PSB: 150µm synthetic SBF-WE3L-Z10B: 150µm synthetic
O-Ring:	Buna N

*Contact factory for additional filter ratings

Schroeder BestFit™ P/N
SBF-PF3L-Z12B
SBF-WE3L-Z60B
SBF-WS3L-Z10B
Seebach Element P/N
SA12MB-PF3L-95/5
SA75FBWE3L-Water
SA12MB-WS3LP-95/5
Seebach Filter
Triple "L" Filter
Triple "L" Filter
Triple "L" Filter

Schroeder Part Number: SBF - SALL - 40Z150B & SBF- SALL - 40Z10B

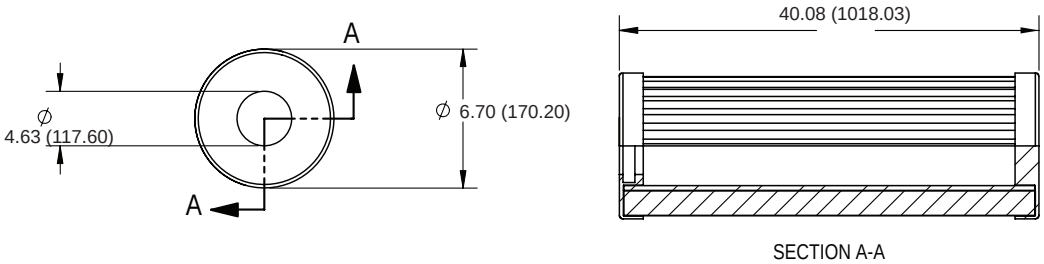

Specifications

Micron Rating:	SBF-SALL-40Z150B: 150µm SBF-SALL-40Z10B: 10µm
Collapse Rating:	Not Rated
End Caps:	Anodized Aluminum
Support Tube:	None
Filter Media:	SBF-SALL-40Z150B: 150µm synthetic SBF-SALL-40Z10B: 10µm synthetic
O-Ring:	Buna N

*Contact factory for additional filter ratings

Schroeder BestFit™ P/N
SBF-SALL-40Z150B
SBF-SALL-40Z10B
Seebach Element P/N
SALL40FB-150-Water
SALL40G010-95/5
Seebach Filter
2UC3230-000
2UC3230-000

Mining Specific Elements

LW60

Excellement MD

Mining Specific Elements

Schroeder Part Numbers: MSB-3070-225 (25 µ), MSB-3070-240 (40 µ), MSB-3070-280 (80 µ) & MSB-3070-2100 (100 µ)

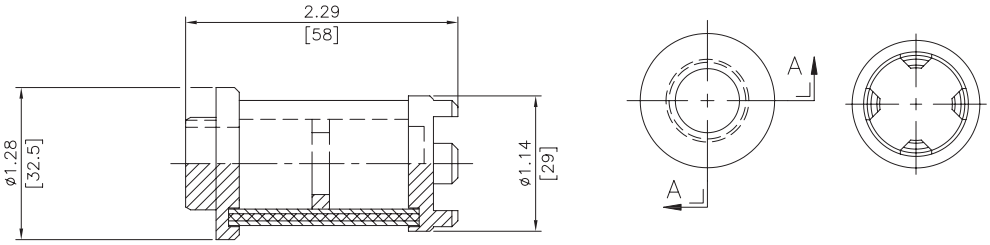

Specifications

Pressure Drop

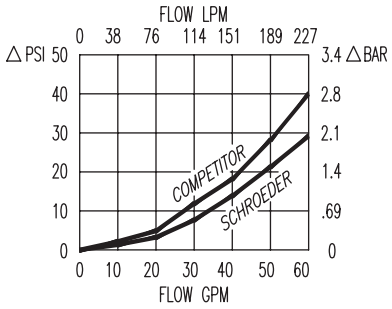

Max Pressure:	5,000 psi (350 bar)
Max Differential Pressure:	5,000 psid (350 bar)
Max Flow Rate:	52 gpm (200/L/min)
Filter Rating:	25/40/80/100 Micron
End Caps:	Stainless Steel
Support Tubes:	Stainless Steel
Metal Mesh:	Stainless Steel Wrap
Support Ring:	Stainless Steel

*Contact factory for additional filter ratings

Schroeder Part Numbers:SBF-PF3L-Z12B (12 µm) & SBF-WE3L-Z60B (60 µm)

Specifications

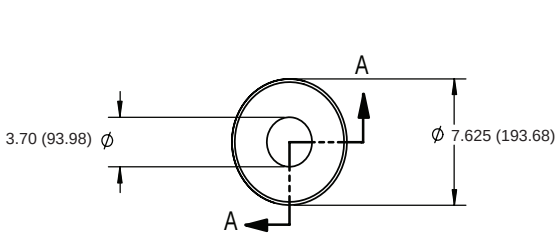

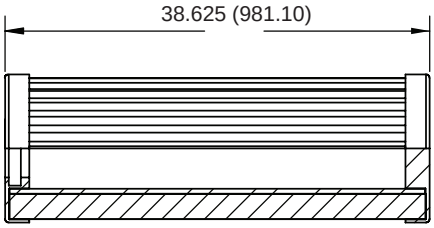

SECTION A-A

Schroeder BestFit™ P/N
SBF-PF3L-Z12B
SBF-WE3L-Z60B
Seebach Element P/N
SA12MB-PF3L-95/5
SA75FBWE3L-Water
Seebach Filter
Triple "L" Filter
Triple "L" Filter

Micron Rating:	SBF-PF3L-Z12B: 12µm SBF-WE3L-Z60B: 60µm
Collapse Rating:	150 psid (min)
End Cap:	Anodized Aluminum
Support Tube:	SBF-PF3L-Z12B: Cold Roll Steel SBF-WE3L-Z60B: Stainless Steel
Filter Media:	SBF-PF3L-Z12B: 12µm synthetic SBF-WE3L-Z60B: 150µm synthetic
O-Ring:	Buna N

z

*Contact factory for additional filter ratings

Mining Specific Elements

Schroeder Part Number: MSB-3185-425B (25 µ)

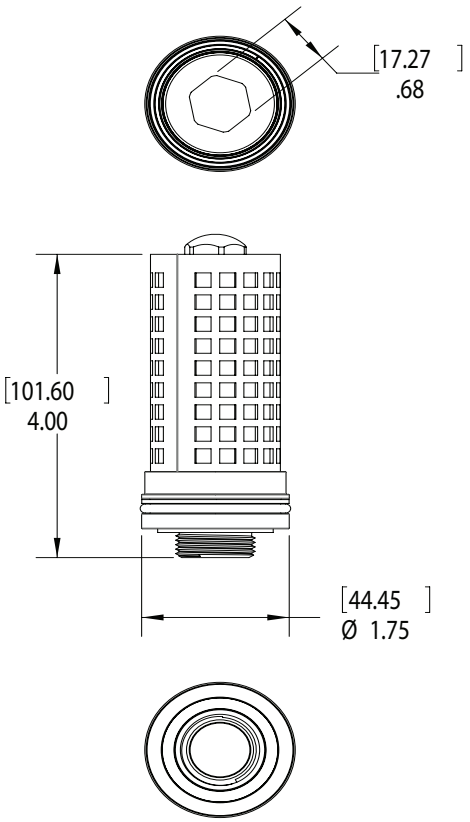

Specifications

Max pressure:	5000 psi (350 bar)
Max Differential Pressure:	5000 psid (350 bar)
Max flow Rate:	105 gpm (400 l/min.)
Filter Rating:	25 micron
Material:	Body - Stainless Steel Metal Mesh - Stainless Steel Wrap O-Ring - Buna N Back-Up Ring - Nylon

*Contact factory for additional filter ratings

Materials of Construction for Housings, Elements and Seals

Carbon steel without coating – General purpose for non-corrosive and non-oxidizing liquids.

Carbon steel with protective internal coating – This internal coating protects against UV, abrasion and corrosion, and should be specified for water applications, such as river water, service water, cooling water, clear run water from sewage treatment facilities, etc.

304 Series stainless steel – Widely available, good general corrosion resistance, good cryogenic toughness. Excellent formability and weldability.

316 Series (L and Ti) stainless steel – Widely available, good general corrosion resistance, good cryogenic toughness. Excellent formability and weldability.

Polyamide (filter element end caps) – General-purpose polymer (amide) for use in applications such as hydraulics and pneumatics. Resistant to oils, hydraulic fluids, water fuels, gases, petroleum oils, cold water, silicone greases and oils Di-ester base lubricants (MIL-L-7808) ethylene glycol base fluids (Hydrolubes) not suited for use in brake fluids. Good abrasion resistance. Good resistance to compression set. High tensile strength. Characteristics: Stable plastic. Dull, matte finish.

PTFE / Teflon® (a registered trademark of DuPont Dow Elastomers) – General-purpose thermoplastic (Polytetrafluoroethelyene) for use as a low friction, insulating product that is inert to most chemical substances.

Buna N / NBR (nitrile) – General purpose elastomer for use as seal energizer or low-pressure applications, such as hydraulics and pneumatics. Resistant to oils, hydraulic fluids, water fuels, gases, petroleum oils, cold water, silicone greases and oils. Di-ester base lubricants (MIL-L-7808), ethylene glycol base fluids (Hydrolubes) not suited for use in brake fluids. Good abrasion resistance. Good resistance to compression set. High tensile strength. Characteristics: Rubber-like elastomer. Dull, matte finish. Some NBR o-rings have a very shiny surface.

Silicone – General-purpose elastomer for use as seal material. Resists water and many chemicals such as some acids, oxidizing chemicals, ammonia and isopropyl alcohol. Note: concentrated acids, alkalines and solvents should not be used with silicone rubber. Characteristics: Soft rubber-like elastomer. High tear and tensile strength, good elongation, excellent flexibility.

Viton® (a registered trademark of DuPont Dow Elastomers) – Widely available elastomer for use as seal energizer or low-pressure applications, such as process fluids, hydraulics and pneumatics. Highly resistant to many aggressive fluids, such as fuels and chemicals. Characteristics: Rubber-like elastomer. ISO 9000 registration.

EPDM (Ethylene Propylene Diene) – Versatile and widely used synthetic rubber recognized for its resistance to heat, oxidation, weather, and electricity. Compatible with water, acids, alkalies, phosphate esters and many ketones and alcohols.

Cleaning Reusable Filter Elements – The cleaning methods for the reusable elements depend upon the type of service and the filter element design. The individual cleaning methods described here can be combined to achieve better results. It is not advisable to attempt most of these cleaning methods without the proper equipment and training. There are competent organizations best suited for this type of work. Upon request, we will provide a cleanliness certificate, including the results of a bubble-point test as well as the clean and fully laden element weights.

Pyrolysis – This method is based upon the removal of organic materials imbedded within the element. Organic material is vaporized at high temperature in an oxygen-depleted atmosphere. Exact control of the temperature and oxygen content is required to avoid damage to the element of the possibility of flame generation.

Vacuum Pyrolysis – This method is based upon the removal of plastic materials imbedded within the element using a two-step process. Organic material is vaporized at high temperature in an oxygen-depleted atmosphere within a vacuum chamber. In this process the material to be removed is melted into liquid and evacuated via vacuum in the first step, then further heating vaporizes the remaining material in the second step. Exact control of the vacuum, temperature and oxygen content is required to avoid damage to the element of the possibility of flame generation.

Boil Off – This method is based upon a process similar to a commercial dishwasher. Constant flowing of a flushing liquid (typically a solvent) at high temperature ensures removal of particles.

High Pressure Wash – This method is used mainly for the removal of coarse particles from the filter elements. It can be a manual or automatic process depending on the equipment available. A standard high pressure using water or water-based solvents can be used taking care not to damage the element. The wash direction must be consistent with the flow direction of the element.

Ultrasonic Cleaning – This method utilizes an ultrasonic bath, which easily loosens the particles imbedded in the filter element. Using water with a detergent additive, a 20 to 40 Hz frequency is recommended. Solvents other than standard detergents can be used also.

The information provided in this section is for reference only, and should be used as a guide when selecting the proper filters, elements, materials of construction and determining fluid compatibility. Schroeder Industries presents the information in this medium in good faith, and it is and believed to be accurate and correct. No representations or warranties as to the completeness or accuracy of the information are made by Schroeder. The persons receiving or using this information must make their own determinations as to intended use, purpose and application. Schroeder will assume no responsibility for damages or be held liable for any misuse or misapplication based upon the data within this medium. For your specific application, contact Schroeder Industries at www.schroederpure.com by phone at 724.318.1100 or fax at 724.318.1200.

Process Filtration Worksheet

Company _____

Contact Name _____

Department _____

Contact Title _____

Street _____

City, State, Zip _____

Phone _____ Fax _____

Date _____ E-mail _____

Providing the following information will allow us to determine the most appropriate process filter for your particular application.

Description of Application: (add schematics as needed) _____

_____

Type of Fluid _____ Flow Rate _____ gpm

Operating Pressure _____ psi Design Pressure _____ psi

Operating Temperature* _____ °F Design Temperature _____ °F

Filtration Rating _____ µm Viscosity _____ SUS

Dirt Content _____ mg/l Voltage*** _____

Desired Filter (please check) Single Filter housing Duplex Filter Housing Self-Cleaning Filter No Preference

Element Type** (please check) Disposable Recyclable No Preference

Dirt Alarm** (please check) Optical Optical Electrical No Preference

Material Requirements (if any) _____

Characterization of Contamination

Pressurized Air Service?*** ☐ No ☐ Yes If yes, please indicate pressure _____ psi

Connection Inlet / Outlet _____

Required Third Party / Certificate? _____

Quantity _____

Comments (Please attach any applicable drawings) _____

_____

*Please contact factory if the maximum temperature exceeds the fluid's boiling point.
**Not for the Self-Cleaning Filter.
***Only needed for the use of a Self-Cleaning Filter.

Schroeder INDUSTRIES
Advanced Fluid Conditioning Solutions®

Markets Served

PROCESS FILTRATION

L-2728 | 2021

Schroeder INDUSTRIES

Advanced Fluid Conditioning Solutions®

DISTRIBUTED BY:

*To access more information about Schroeder, scan the code with your app-enabled smartphone.

© Copyright 2021 Schroeder Industries. All rights reserved