HYDRAULIC LUBE FILTRATION

Product Catalog

Schroeder INDUSTRIES

Advanced Fluid Conditioning Solutions®

v. 111323

About Schroeder Industries

Schroeder Industries is a family company of 76 years which manufactures, designs, and markets a complete range of Advanced Fluid Conditioning Solutions®. Headquartered in Leetsdale, PA, we are in the heart of manufacturing country.

Schroeder Brothers Corporation was founded after Bill Schroeder returned from WW2. Bill wrote a letter to his brother Jack, a young engineer, describing an opportunity to distribute an important new product to the mining industry. In the letter, Bill explained that he believed they could build a business around this technology.

Schroeder Brothers Corporation grew rapidly, adding additional mining products and eventually becoming the largest mining equipment distributor in the Appalachia's. Over time, Schroeder began to manufacture hydraulic systems and components for the mines. The systems came first, and with the systems came issues related to contamination.

To this day, underground mining is still one of the most difficult hydraulic system operating environments. With his system experience, Bill realized that there was a critical need for high efficiency filtration. Together with his brothers Jack & Reed, Bill pioneered the development of many hydraulic and lubrication filtration concepts, products, and standards that are still the benchmarks of performance today. Time continued to march on, and Schroeder's business continued to evolve further into a manufacturing company.

Today, Schroeder Industries serves almost every market where high efficiency fluid filtration is required. Our Advanced Fluid Conditioning Solutions® are forged through the real-world experience gained in the world's toughest operating environments.

Mission Statement

Our success is a product of customer-driven innovation and technically advanced fluid conditioning products and services, in which our people deliver value to our stakeholders, communities and environment.

Quality Policy

Continuous improvement in our business to ensure a quality product, shipped on time, without compromise.

Vision

To be the global leader of engineered, fluid conditioning products & services.

Core Values (F.I.L.T.E.R.S)

- **Fueled:** By the success of our customer.
- **Ingenuity:** Engineered solutions for a complex environment.
- **Lead by example:** Better every day through continuous improvement.
- **Together:** We excel through clear communication & teamwork.
- **Empowering:** Employees to provide exceptional quality & service.
- **Responsiveness:** With determination, we make it happen.
- **Safety:** We pride ourselves on a safe, fun & family-oriented work environment.

Contents at a Glance

Detailed Contents: Hydraulic & Lube Filters

Detailed Contents (cont.)

Filter Housings: Flow vs. Operating Pressure

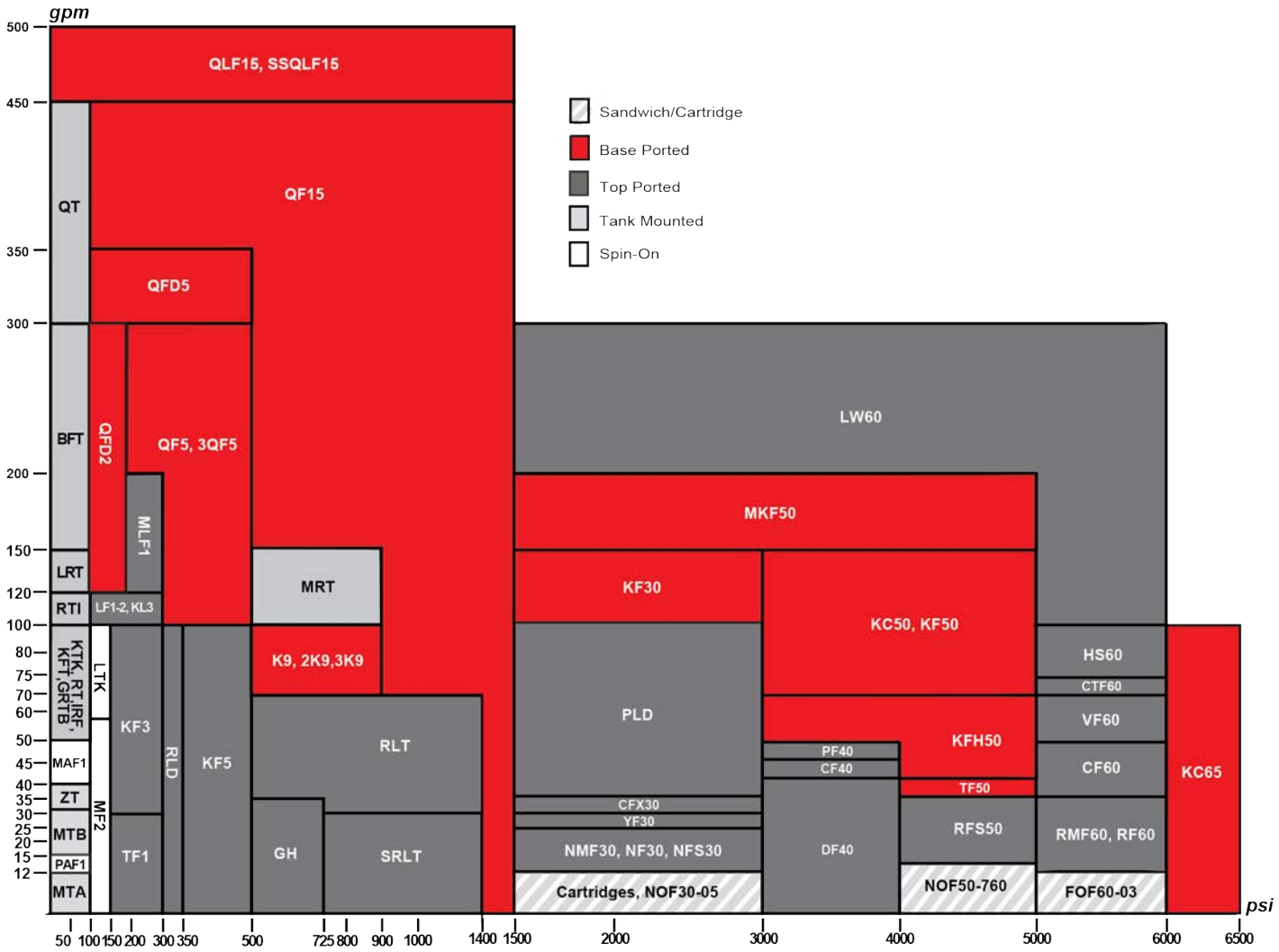

Note to the Reader

The aim of our catalog is to provide the information and guidance you'll need to make informed and appropriate choices for your filtration needs.

Illustrated and easy to understand, Section 1 is now widely used as a training tool by many companies, including original equipment manufacturers for whom Schroeder provides value-added products. The revised Section 1 continues to serve as an effective "primer" on contamination control fundamentals. In this section, we also provide filtration information and guidance for selecting the optimal filter and element media for your application.

Section 1 also explains recent changes in industry standards regarding how fluid cleanliness is defined and measured. Recent technological advancements in the measurement of microscopic particles, coupled with the establishment of a new standard test dust for calibration purposes, necessitated these changes. Although the new standards may seem confusing at first, they enable more accurate sizing of dirt particles and reduce variability in output among different automatic particle counters. The end result is more reliable data for the user.

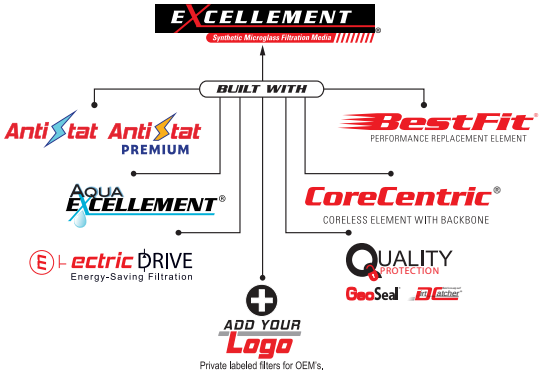

In Section 2, you'll find extensive technical data on Schroeder's Excellement® Z-Media®, which combines high efficiency, low pressure drop and exceptional dirt holding capacity. Schroeder's design engineers have also given special attention to developing more environmentally friendly products, such as Corecentric® elements, which contain no metal and can be crushed, shredded or burned.

Sections 3 through 6 describe the types of contamination control products and accessories we offer. Whether your hydraulic system requires pressure filters, tank-mounted filters, return-line filters, or some combination of these, this updated catalog will help you find the right Schroeder filter to do the job. Of course, every filter comes with a Schroeder original element, available in a wide variety of media and micron ratings.

Dirt Alarm®, BestFit®, Excellement®, DirtCatcher® and CoreCentric® are registered trademarks of Schroeder Industries.

Visit Us Online...

Schroeder's web site, www.schroederindustries.com, is filled with helpful resources.

Replacing filter elements is simpler than ever before with our Online Cross-Reference Guide to BestFit® replacement elements. With this user-friendly guide you can match 41,000 filter elements from 150 other manufacturers with appropriate BestFit® replacements. Click the BestFit® link on our home page or got to the direct link at www.schroederindustries.info.

Corporate Overview

Schroeder Industries, an ISO 9001:2015 certified company, focuses on developing filtration and fluid service products for our customers in the fluid power industry and is proud of our proven track record of providing quality products over the last 75 years. The designs you see in this catalog are the result of thousands of hours of field testing and laboratory research...and decades of experience.

Schroeder was one of the first companies to demonstrate the need for, and benefits of, hydraulic filtration. We pioneered the development of micronic filtration, helping to set performance standards in industrial fluid power systems. As a result, Schroeder is now a leader in filtration and fluid conditioning—and the proof of our expertise lies in our broad mix of unsurpassed products. Our mission statement reflects our continuing commitment to excellence:

Partnerships

Innovating products, solutions, processes and services to improve performance and efficiency in industry.

We design solutions for industry and for the success of our customers by:

- Optimizing the use of technology with applications
- Using an efficient, timely customization process to fill specific customer needs
- Increasing manufacturing capacity and streamlining operations
- Preserving our reputation for reliability
- Expanding globally to support our customers and stay current with new technologies
- Leveraging and sharing our knowledge to meet challenges openly
- Nurturing a creative, cooperative culture committed to the individual and to providing the best solutions for our customers

Our goal is to be your filtration partner. Our expertise in filtration technology, our superior filter and element manufacturing capabilities, and our dedication to customer service and product support are the reasons we're considered experts in Advanced Fluid Conditioning Solutions®.

We are committed to providing the best available filter products to meet necessary cleanliness levels at a competitive price. As a cost-effective quality producer, we can work with your purchasing department to supply contamination control technology or develop long-range pricing programs that can improve your company's bottom line.

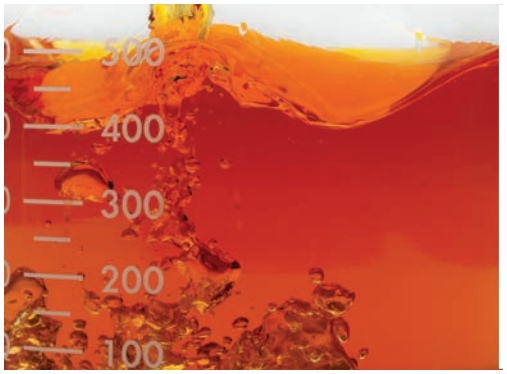

Capabilities

Product Distribution

Schroeder Industries has in place a strategically located international distribution network, supported by our professional and experienced sales and marketing team. Distributor personnel are trained in the important aspects of filter application by Schroeder in training sessions held at our factory and around the globe. The effectiveness of our product and service support is multiplied by utilizing Schroeder's extensive distributor network. All Schroeder Industries distributors meet very strict criteria to enhance our ability to serve the needs of our valued customers.

Schroeder's distributor network includes over 100 distributor locations throughout Europe, the United Kingdom, South Africa, Australia, Asia, North America and South America, so that customers worldwide can rely on Schroeder's exceptional support.

Manufacturing and Testing

Schroeder Industries' corporate headquarters are located in Leetsdale, PA (USA) with an additional manufacturing facility in Cumberland, MD (USA). Filter housings and diagnostic and specialty products are manufactured at our Pittsburgh plant, while filter elements are manufactured in our Cumberland plant. Both facilities have the skilled workforce and the capacity to meet our customers' needs. Schroeder's research and development center as well as our contamination control laboratory are located at our corporate headquarters.

Markets Served

Schroeder's products, technical expertise, commitment to research and development, and ongoing improvements in manufacturing enable us to provide products and services that improve performance and efficiency in many major industries, including:

Products

Engineering Laboratory

Schroeder Industries' products are continually tested using the latest ISO and NFPA test procedures in our engineering lab. Our dynamic test stands are in constant operation, subjecting our filter housings to cyclic pressure to verify their rated fatigue and burst pressures per NFPA Standard T2.6.1. Statistically sampled elements are tested to ensure fabrication integrity in the manufacturing process. They are also tested for efficiency and dirt-holding capacity in a multi-pass test stand, equipped with in-line particle counting capabilities, which are calibrated to ISO standards.

Extensive testing is conducted to ensure compatibility with various hydraulic fluids, including the newest fire-resistant fluids, per ISO 2943 Standard. Flow fatigue tests are run to evaluate the structural strength of elements, per ISO 3724 Standard.

Design and Testing Standards of Schroeder Filter Housings

Description	Standard
Burst Pressure Test	NFPA/T-2.6.1
Fatigue Testing	NFPA/T-2.6.1
Pressure/Life Rating of a Spin-On Filter	NFPA/T-3.10.17
Pressure Drop vs. Flow	ISO 3968

Design and Testing Standards of Schroeder High Efficiency Elements

Description	Standard
Element Collapse (Burst)	ISO 2941
Fabrication Integrity	ISO 2942
Material Compatibility	ISO 2943
End Load	ISO 3723
Element Flow Fatigue	ISO 3724
Pressure Drop vs. Flow	ISO 3968
Multi-Pass	ISO 16889

An Open Invitation

We invite you to present us with any specific filtration challenge you may experience. Schroeder will design and make filters to meet your specific requirements. To find out more, and/or obtain a quote, call us to speak with a sales representative or technical specialist. They can help determine the optimal filtration strategy for a given system. While the quantity of any product manufactured to fit a customer's needs will determine the economic feasibility of a particular project, in many cases, we can offer modified products in relatively small quantities at competitive prices and short lead times.

Over the years, Schroeder design engineers have encountered virtually every type of hydraulic system. We are proud of our continuing success in providing "value-added products" for our customers, that is, making or modifying our products to meet their specific needs. When customers order products from Schroeder, they are assured of a reliable source of supply, consistent and prompt service, and direct support. Pre and post-technical service is provided to ensure customer satisfaction.

So if you're faced with a filtration dilemma, call us.
Schroeder Industries: Advanced Fluid Conditioning Solutions®.

Schroeder INDUSTRIES
Advanced Fluid Conditioning Solutions®

Section 1:

PRINCIPLES OF FILTRATION

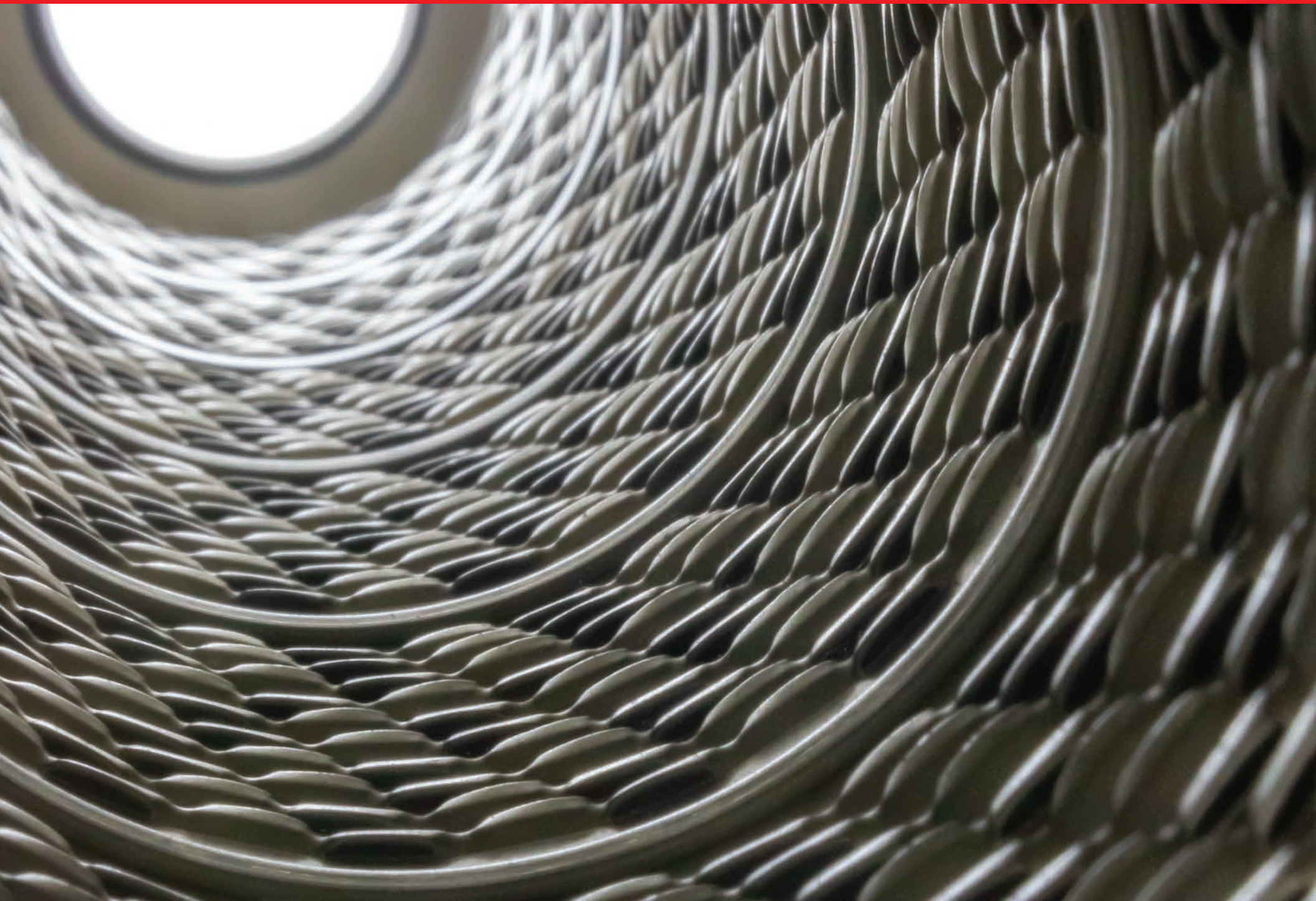

Contamination Control Fundamentals

Why Filter?

Over 70% of all hydraulic system failures are caused by contaminants in the fluid. Even when no immediate failures occur, high contamination levels can sharply decrease operating efficiency.

Contamination is defined as any substance which is foreign to a fluid system and damaging to its performance. Contamination can exist as a gas, liquid or solid. Solid contamination, generally referred to as particulate contamination, comes in all sizes and shapes and is normally abrasive.

High contaminant levels accelerate component wear and decrease service life. Worn components, in turn, contribute to inefficient system operation, seizure of parts, higher fluid temperatures, leakage, and loss of control. All of these phenomena are the result of direct mechanical action between the contaminants and the system components. Contamination can also act as a catalyst to accelerate oxidation of the fluid and spur the chemical breakdown of its constituents.

Filtering a system's fluid can remove many of these contaminants and extend the life of system components.

How a System Gets Contaminated

Contaminants come from two basic sources: they either enter the system from outside (ingestion) or are generated from within (ingression). New systems often have contaminants left behind from manufacturing and assembly operations. Unless they are filtered as they enter the circuit, both the original fluid and make-up fluid are likely to contain more contaminants than the system can tolerate. Most systems ingest contaminants through such components as inefficient air breathers and worn cylinder rod seals during normal operation. Airborne contaminants are likely to gain admittance during routine servicing or maintenance. Also, friction and heat can produce internally generated contamination.

Figure 1. Typical Examples of Wear Due to Contamination

Vanes for Vane Pump

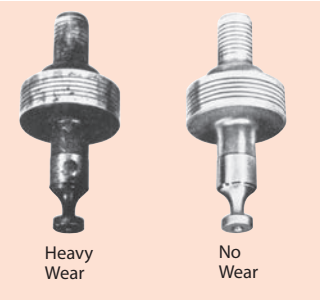

Relief Valve Piston

Vane Pump Cam Ring

Size of Solid Contaminants

The size of solid particle contaminants is commonly measured in micrometers, µm, (usually referred to as microns, µ). A micron is a unit of length equal to one millionth of a meter or about .00004 inch. Particles that are less than 40 µ cannot be detected by the human eye.

Substance	Microns	Inches
Grain of table salt	100 µ	.0039"
Human hair	70 µ	.0027"
Talcum powder	10 µ	.00039"
Bacteria (average)	2 µ	.000078"

Figure 2 shows the sizes of some common substances. To gain some perspective, consider the diameters of the following substances:

A micron rating identifies the size of particles that a particular filtration media will remove. For instance, Schroeder Z10 filter media is rated at ß10 ≥1000, meaning that it can remove particles of 10 µ and greater at 99.9% efficiency.

Figure 2. Sizes of Known Particles in Inches and Microns

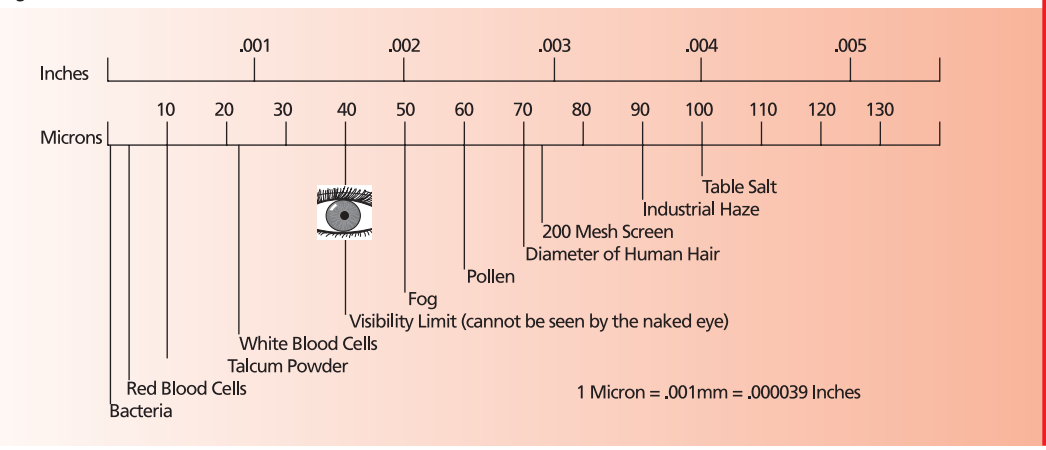

How Contaminants are Measured and Reported

In hydraulic fluid power systems, power is transmitted and contained through a liquid under pressure within an enclosed circuit. These fluids all contain a certain amount of solid particle contaminants. The amount of particulate contaminants present in a hydraulic or lubrication system's fluid is commonly referred to as its cleanliness level.

ISO Scale Numbers– ISO 4406:1999

ISO 4406:1999 provides guidelines for defining the level of contamination present in a fluid sample in terms of an ISO rating. It uses three scale numbers, representing the number of particles greater than or equal to 4 µ(c), 6 µ(c), and 14 µ(c) in size per 1 mL of sample fluid.

Figure 3 shows the graph used to plot particle counts per ISO 4406:1999.

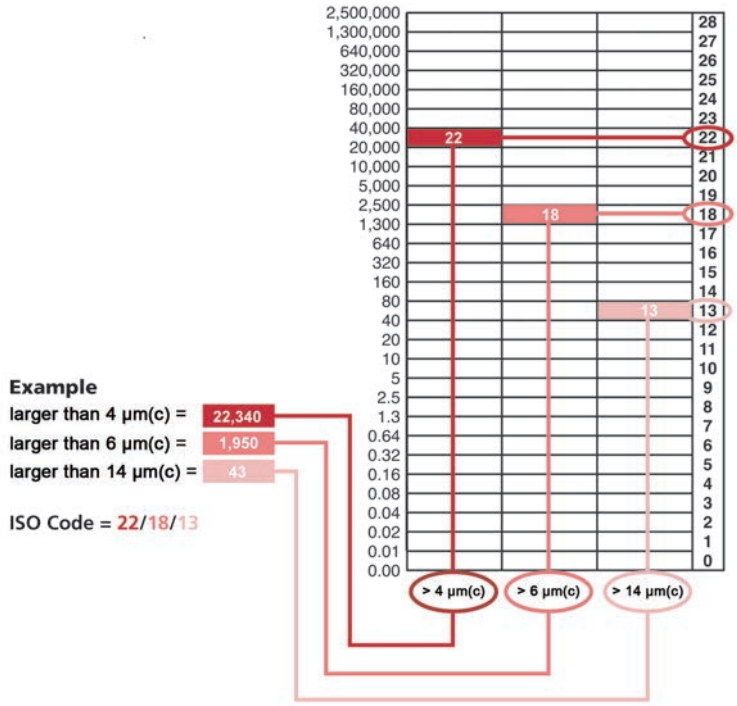

- Reproducibility below scale number 8 is affected by the actual number of particles counted in the fluid sample. Raw counts should be more than 20 particles. If this is not possible, then refer to bullet below.
- When the raw data in one of the size ranges results in a particle count of fewer than 20 particles, the scale number for that size range shall be labeled with the symbol ≥.

EXAMPLE: A code of 14/12/≥7 signifies that there are more than 80 and up to and including 160 particles equal to or larger than 4 µ(c) per mL and more than 20 and up to and including 40 particles equal to or larger than 6 µ(c) per mL. The third part of the code, ≥7 indicates that there are more than 0.64 and up to and including 1.3 particles equal to or larger than 14 µ(c) per mL. The ≥ symbol indicates that less than 20 particles were counted, which lowers statistical confidence. Because of this lower confidence, the 14 µ(c) part of the code could actually be higher than 7, thus the presence of the ≥ symbol.

Cleanliness Levels– ISO 4406:1999

The following example shown in Figure 4 illustrates the cleanliness level, or ISO rating, of a typical petroleum-based fluid sample using the ISO Code 4406:1999 rating system.

The fluid sample contains a certain amount of solid particle contaminants, in various shapes and sizes.

Since the number of 4 µ(c) particles falls between 2500 and 5000, the first ISO range number is 19 using Table 1. The number of 6 µ(c) particles falls between 160 and 320 particles, so the second ISO range number is 15. The number of 14 µ(c) particles falls between 10 and 20, making the third range number 11. Therefore, the cleanliness level for the fluid sample shown in Figure 4 per ISO 4406:1999 is 19/15/≥11.

Figure 4. Determining the ISO Rating of a Fluid Using ISO 4406:1999

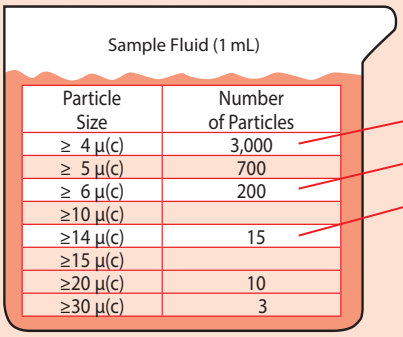

Particle Size	Number of Particles
≥ 4 µ(c)	3,000
≥ 5 µ(c)	700
≥ 6 µ(c)	200
≥10 µ(c)	
≥14 µ(c)	15
≥15 µ(c)	
≥20 µ(c)	10
≥30 µ(c)	3

If Particle Count Falls Between	Scale Number is*
2500-5000	19
160-320	15
10-20	11

*Source: ISO 4406:1999

The Sample Fluid is ISO 19/15/≥11.

*Note: When the raw data in one of the size ranges results in a particle count of fewer than 20 particles the range code for that number for that size range shall be preceded with a ≥ sign.

Required Cleanliness Levels

The pressure of a hydraulic system provides the starting point for determining the cleanliness level required for efficient operation. Table 2 provides guidelines for recommended cleanliness levels based on pressure. In general, Schroeder defines pressure as follows:

Low pressure: 0-500 psi (0-35 bar)
Medium pressure: 500-2999 psi (35-206 bar)
High pressure: 3000 psi (206 bar) and above

A second consideration is the type of components present in the hydraulic system. The amount of contamination that any given component can tolerate is a function of many factors, such as clearance between moving parts, frequency and speed of operation, operating pressure, and materials of construction. Tolerances for contamination range from that of low pressure gear pumps, which normally will give satisfactory performance with cleanliness levels typically found in new fluid (ISO 19/17/14), to the more stringent requirements for servo-control valves, which need oil that is eight times cleaner (ISO 16/14/11).

Today, many fluid power component manufacturers are providing cleanliness level (ISO code) recommendations for their components. They are often listed in the manufacturer's component product catalog or can be obtained by contacting the manufacturer directly. Their recommendations may be expressed in desired filter element ratings or in system cleanliness levels (ISO codes or other codes). Some typically recommended cleanliness levels for components are provided in Table 3.

Table 2. Cleanliness Level Guidelines Based on Pressure

System Type	Recommended Cleanliness Levels (ISO Code)
Low pressure – manual control (0 - 500 psi)	20/18/15 or better
Low to medium pressure – electrohydraulic controls	19/17/14 or better
High pressure – servo controlled	16/14/11 or better

Table 3. Recommended Cleanliness Levels (ISO Codes) for Fluid Power Components

Components	Cleanliness Levels (ISO Code) 4 µ(c)/6 µ(c)/14 µ(c)
Hydraulic Servo Valves	15/13/11
Hydraulic Proportional Valves	16/14/12
Hydraulic Variable Piston Pump	16/14/12
Hydraulic Fixed Piston Pump	17/15/12
Hydraulic Variable Vane Pump	17/15/12
Hydraulic Fixed Vane Pump	18/16/13
Hydraulic Fixed Gear Pump	18/16/13
Ball Bearings	15/13/11
Roller Bearings	16/14/12
Journal Bearings (>400 rpm)	17/15/13
Journal Bearings (<400 rpm)	18/16/14
Gearboxes	18/16/13
Hydrostatic Transmissions	16/14/11
Pumps	16/14/12

This table is based on data shown in various hydraulic component manufacturer's catalogs. Contact Schroeder for recommendations for your specific system needs.

Required Cleanliness Levels

(continued)

Table 4. Cleanliness Class Comparisons

ISO 4409:1999	SAE AS 4059:E	NAS 1638-01/196	MIL-STD 1246A 1967	ACFTD Gravimetric Level-mg/L
24				
23/20/18		12		
22/19/17	12	11		
21/18/16	11	10		
20/17/15	10	9	300	
19/16/14	9	8		
18/15/13	8	7	200	1
17/14/12	7	6		
16/13/11	6	5		
15/12/10	5	4		0.1
14/11/9	4	3	100	
13/10/8	3	2		
12/9/7	2	1		0.01
11/8/6	1	0		
10/7/5	0	00		
8/7/4	00		50	
5/3/01			25	
2/0/0			5	

For your convenience, Table 4 provides a cross reference showing the approximate correlation between several different scales or levels used in the marketplace to quantify contamination.
The table shows the code levels used for military standards 1638 and 1246A, as well as the SAE AS4059 standard.

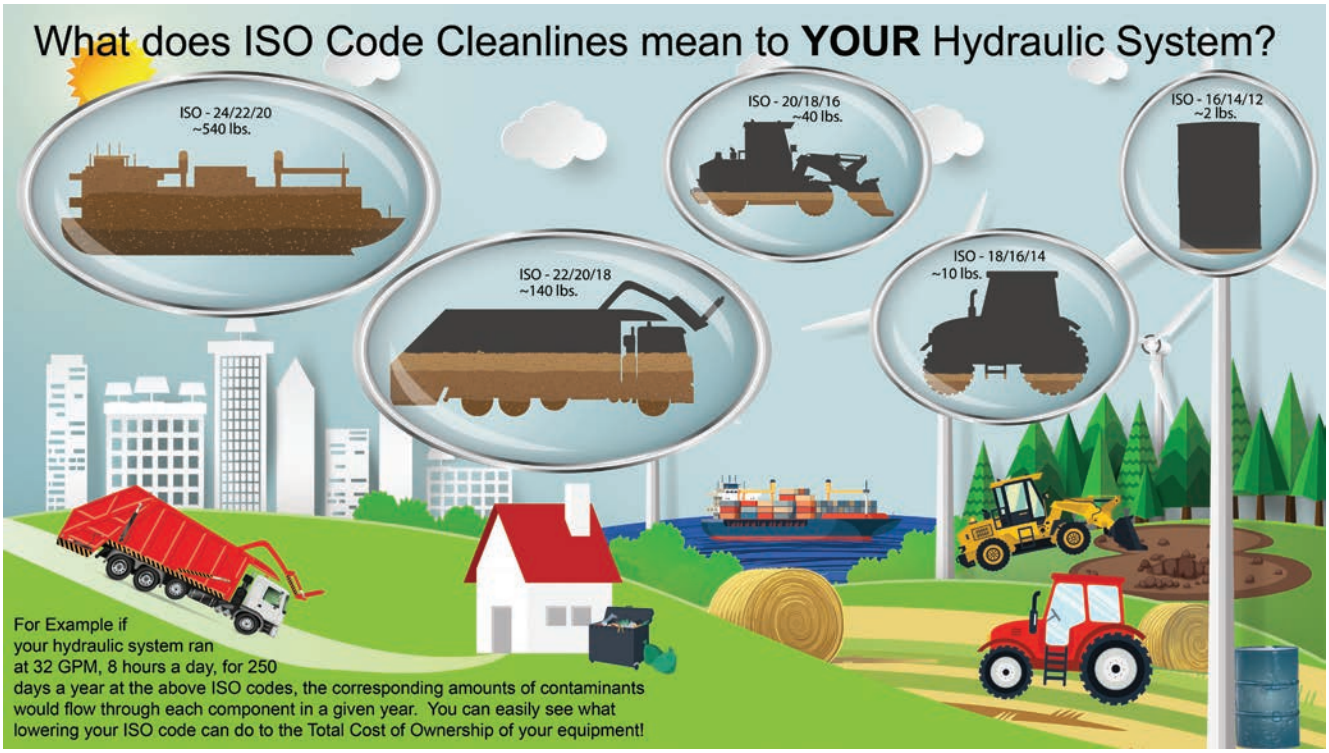

Element Technical Data Fundamentals

Performance Specifications/ Filtration Ratings

Schroeder filter elements meet a wide variety of requirements in today's workplace, from the simplest to the most sophisticated fluid power systems. Established industry standards enable users to select the optimal filter element for any application.

When evaluating the performance of hydraulic filter elements, the most important parameters to consider are:

(a) efficiency

(b) beta stability

(c) dirt holding capacity

(d) pressure drop vs. flow

(a) Efficiency, or filtration ratio, expressed by "Beta" (ß) relates to how well an element removes contamination from fluid. Higher efficiency translates to cleaner oil, better protection of system components, less down time for repair, and lower maintenance costs.

(b) Beta stability is defined as an element's ability to maintain its expected efficiency as differential pressure across the element increases. Differential pressure will increase as contamination is trapped, or with an increase in fluid viscosity (cold start). Beta stability is important because it relates to how well an element will perform in service over time. When the element is loaded with contamination, or when it is subjected to cold starts, will it perform as well as it did when new?

(c) Dirt holding capacity (DHC) is the amount of contamination that an element can trap before it reaches a predetermined "terminal" differential pressure. Dirt holding capacity is related to element life. Since elements with higher DHC need changed less frequently, DHC has a direct impact on the overall cost of operation. When selecting filter elements, it is beneficial to compare DHC of elements with similar particle removal efficiency.

(d) Pressure Drop vs. Flow is simply a measure of resistance to fluid flow in a system. It is important to consider the initial pressure drop (Δp) across the filter element (and housing). Ideally, a filter element should be sized so that the initial pressure drop across the clean element (plus the filter housing drop) is less than half the bypass valve setting in the filter housing.

When selecting a filter element for your system, be sure to consider all four of these performance criteria. If an element is strong in three areas, but weak in another, it may not be the right choice. At every level of filtration, Schroeder's Excellement® Z-Media® elements offer the best combination of high efficiency, high beta stability, high dirt holding capacity, and low pressure drop.

The Multi-pass Test

Filter element efficiency ratings, beta stability, and capacities are determined by conducting a multi-pass test under controlled laboratory conditions. This is a standard industry test with procedure published by the International Standards Organization (ISO 16889). The multi-pass test yields reproducible test data for appraising the filtration performance of a filter element including its particle removal efficiency. These test results enable the user to: (1) compare the quality and specifications offered by various filter element suppliers and (2) select the proper filter element to obtain the optimal contamination control level for any particular system.

Hydraulic fluid (Mil-H-5606) is circulated through a system containing the filter element to be tested. Additional fluid contaminated with ISO MTD Test Dust is introduced upstream of the element being tested. Fluid samples are then extracted upstream and downstream of the test element.

Dirt holding capacity is defined as the total grams of ISO MTD Test Dust added to the system to bring the test filter element to terminal pressure drop.

Figure 5. Multi-Pass Test Schematic

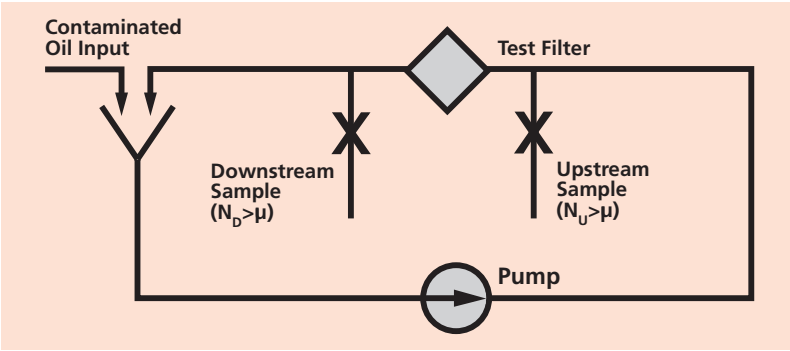

Efficiency / Filtration Ratio (Beta)

The filtration ratio (more commonly referred to as the Beta ratio) is, in fact, a measure of the particle capture efficiency of a filter element.

Per ISO 16889 $$ß_{x(c)} = \frac{\text{number of particles upstream @ x(c) microns}}{\text{number of particles downstream @ x(c) microns}}$$

where x(c) is a specified particle size.

$$\text{Example: } ß_{10} = \frac{400}{100} = 4$$

This particle capture efficiency can also be expressed as a percent by subtracting the number 1 from the Beta (in this case 4) and multiplying it by 100:

$$\text{Efficiency}_{10} = \frac{(4-1)}{4} \times 100 = 75\%$$

The example is read as "Beta ten is equal to four, where 400 particles, 10 microns and larger, were counted upstream of the test filter (before) and 100 particles, 10 microns and larger, were counted downstream of the test filter (after)."

The filter element tested was 75% efficient in removing particles 10 microns and larger.

Efficiency

To calculate a filter element's percent efficiency, subtract 1 from the Beta, divide that answer by the Beta, then multiply by 100.

	Example
Step 1:	$ß_{10(c)} > +1000$
Step 2:	1000 -1 = 999
Step 3:	999 ÷ 1000 = .999%
Step 4:	.999 x 100 = 99.9%

Filtration Ratio

According to ISO 16889, each filter manufacturer can test a given filter element at a variety of flow rates and terminal pressure drop ratings that fit the application, system configuration and filter element size. Results may vary depending on the configuration of the filter element tested and the test conditions.

Currently, there is no accepted ISO, ANSI, or NFPA standard regarding absolute ratings. Some filter manufacturers use $ß_x(c) \geq 75$ (98.7% efficiency) for their absolute rating. Others use $ß_x(c) \geq 100$ (99.0% efficiency), $ß_x(c) \geq 200$ (99.5% efficiency), or $ß_x(c) \geq 1000$ (99.9% efficiency). Performance of Schroeder elements is shown in the Element Performance Chart for each filter housing in Sections 3 through 8 at a number of filtration ratios to allow the user to evaluate our performance against that of our competitors.

Beta Stability

Beta stability is defined as an element's ability to maintain its expected efficiency as differential pressure across the element increases. Differential pressure will increase as contamination is trapped, or with an increase in fluid viscosity. An element's beta stability is displayed in the Filtration Ratio (Beta) vs. Differential Pressure curve from a typical multi-pass test report per ISO 16889. Good beta stability is demonstrated by consistent or improving efficiency as differential pressure builds across the element. Conversely, decreasing efficiency as pressure builds is a sign of poor stability. Poor beta stability is an indication of a filter element's structural deficiency. It is a sign of potential problems in a "real world" situation. Contamination, "cold starts", and flow surges can all create high differential pressure across an element that may cause efficiency to decrease if it is not structurally sound. In cases of "cold starts" and flow surges, the media structure in elements with poor stability can become permanently damaged in milliseconds. The result is lower efficiency and decreased system protection without warning to the operator. High beta stability results when an element is well-built with quality, durable materials. Strength of filter media and reinforcement layers, impervious seaming, proper end cap adhesion, and a rigidly supported structure all play a part in an element's beta stability. Excellement® media structure typically maintains beta stability over 100 psi.

Example of poor beta stability – efficiency declines as differential pressure increases.

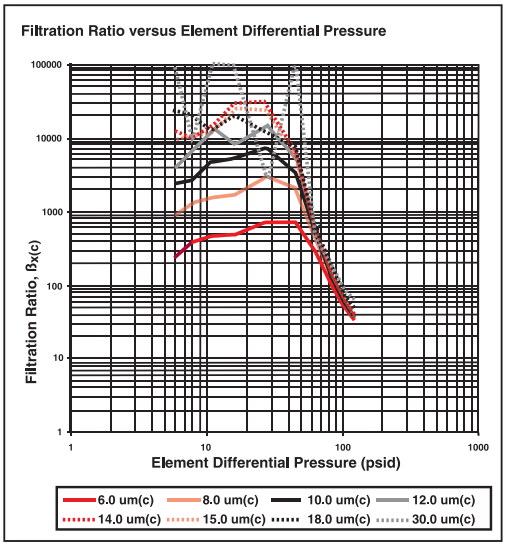

Example of Excellement® beta stability – efficiency does not decline as differential pressure increases.

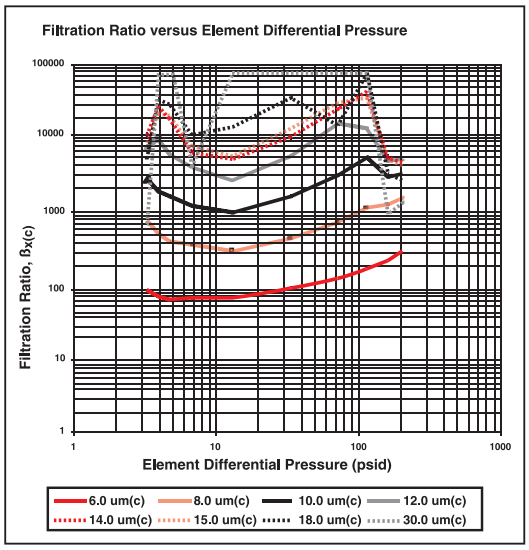

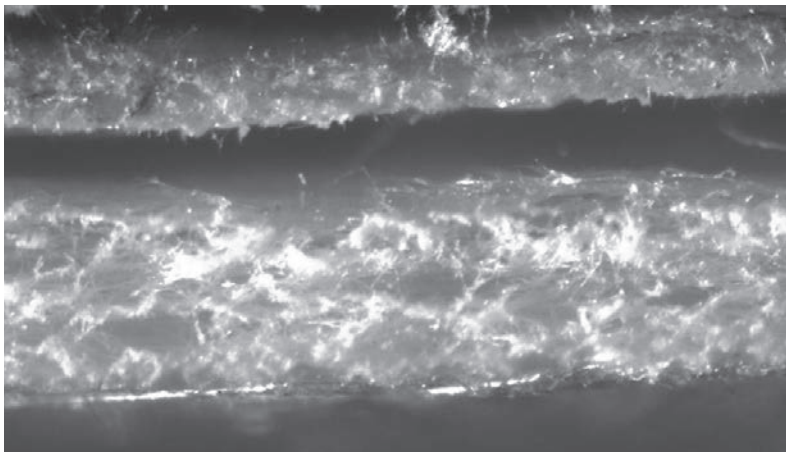

Microscopic Photo - 50x magnification

Top: competitor's media Bottom: Schroeder Excellement® Z-Media®

Thin, weak media cannot withstand differential pressure as well as Z-Media®.

This photo shows a comparison of our competitors filtering layer media versus our Schroeder Excellement® Z-Media®. Schroeder Z-Media® offers better depth filtration to withstand a higher differential pressure and entrap more contaminant / particles.

Dirt Holding Capacity

Dirt holding capacity (DHC) is the amount of contaminant (expressed in grams) the element will retain before it goes into bypass. All other factors being equal, an element's DHC generally indicates how long the element will operate
until it needs to be replaced. The element's life span is directly related to the cost of operating the filter.

Dirt holding capacity, sometimes referred to as "retained capacity," is a very important and often overlooked factor in selecting the right element for the application. The dirt holding capacity of an element is measured in grams of ISO medium test dust contaminant as determined from the multi-pass test (ISO 16889). When selecting filter elements, it is beneficial to compare the dirt holding capacities of elements with similar particle removal efficiencies.

Pressure Drop

When sizing a filter, it is important to consider the initial differential pressure (ΔP) across the element and the housing. Elements offering a lower pressure drop at a high Beta efficiency are better than elements with a high ΔP at the same efficiency. At every level of filtration, Schroeder's Excellement® Z-Media® elements offer the best combination of high efficiency, high stability, high dirt holding capacity, and low pressure drop. The pressure drop of an element is determined by testing according to ISO 3968.

Collapse Rating

The collapse (crush) rating of a filter (determined by ISO 2941/ANSI B93.25) represents the differential pressure across the element that causes it to collapse. The collapse rating of a filter element installed in a filter housing, with a bypass valve, should be at least two times greater than the full flow bypass valve pressure drop. The collapse rating for filter elements used in filter housings with no bypass valve should be at least the same as the setting of the system relief valve upstream of the high-crush element. When a high collapse element becomes clogged with contamination all functions downstream of the filter will become inoperative.

Element Media Selection Considerations

The Right Media for the Right Application=Job Matched Filtration

Filtration Application Guidelines

Selecting the proper Schroeder media for your application is easy if you follow these simple guidelines.

Step 1. Remember that the key to cost effective contamination control is to maintain the system's cleanliness at the tolerance level of the system's most sensitive component. So, the first step is to identify the most sensitive component.

Step 2. Determine the desired cleanliness level (ISO Code) for that component by referring to Figure 3 on page 13 or by contacting the component manufacturer directly.

Step 3. Identify the Schroeder filter medium referencing Table 6 that will meet or exceed the desired cleanliness level.

Step 4. Remember to regularly check the effectiveness of the selected media through the use of contamination monitoring equipment.

Table 6. Schroeder Element Media Recommendations

Desired Cleanliness Levels (ISO Code)	Schroeder Media
20/18/15-19/17/14	Z25
19/17/14-18/16/13	Z10
18/16/13-15/13/10	Z5
15/13/10-14/12/9	Z3
14/12/9-13/11/8	Z1

Effect of Ingression

Filter element life varies with the dirt holding capacity of the element and the amount of dirt introduced into the circuit. The rate of this ingression in combination with the desired cleanliness level should be considered when selecting the media to be used for a particular application. Table 7 provides recommendations accordingly.

The amount of dirt introduced can vary from day to day and hour to hour, generally making it difficult to predict when an element will become fully loaded. This is why we recommend specifying a Dirt Alarm®.

Schroeder-designed Dirt Alarms® provide a vital measure of protection for your system by indicating when the filter element needs to be changed or cleaned. Schroeder filters are available with visual, electrical and electrical-visual combination Dirt Alarms®. These indicators may also be purchased as separate items. For more information on Dirt Alarms®, see Appendix A.

Table 7. Recommended Schroeder Media to Achieve Desired Cleanliness Levels Based on Ingression Level

Desired Cleanliness Levels (ISO Code)	Ingression Rate	Schroeder Element Medium
20/18/15	High	Z25
19/17/14	Low	Z25
19/17/14	High	Z10
18/16/13	Low	Z10
18/16/13	High	Z5
15/13/10	Low	Z5
15/13/10	High	Z3
14/12/9	Low	Z3
14/12/9	High	Z1
13/12/9	Low	Z1

Amount of Fluid Filtered

To obtain the desired cleanliness level (ISO Code) using the suggested Schroeder filter medium, it is recommended that a minimum of one-third of the total fluid volume in the system pass through the filter per minute. If fluid is filtered at a higher flow rate, better results may be achieved. If only a lesser flow rate can be filtered, a more efficient media will be required.

Systems operating in a clean environment, with efficient air-breather filters and effective cylinder rod wiper seals, may achieve the desired results at a lower turnover rate. Systems operating in a severe environment or under minimal maintenance conditions should have a higher turnover. Turnover must be considered when selecting the location of the system's filter(s).

Sizing a Filter Element

Since the pressure drop versus flow data contained in our filter catalog is for fluids with a viscosity of 150 SUS (32.0 cSt), and a specific gravity of .86, we are often asked how to size a filter with a viscosity other than 150 SUS (32.0 cSt) or a specific gravity other than .86. In those instances where the viscosity or specific gravity is significantly higher, it may be necessary to use a larger element. To make this determination, we need to calculate the life of the element, using the following equation:

$$EL = RC - (H + E)$$

Where:

EL = Element Life (expressed in psi)	H = Housing pressure drop
RC = Relief valve cracking pressure	E = Element pressure drop

1. The housing pressure drop can be read directly from the graph. This value is not affected by viscosity or the number of elements in the housing, since housing flow is turbulent.
2. The element pressure drop is directly proportional to viscosity, since element flow is laminar.

Schroeder's "rule of thumb" for element life, as calculated from the above equation, is to work towards a differential pressure drop that is no more than half (50%) of the bypass setting.

The interval between element change outs can be extended by increasing the total filter element area. Many Schroeder filters can be furnished with one, two, or three elements or with larger elements. By selecting a filter with additional element area, the time between servicing can be extended for little additional cost.

Fluid Compatibility: Fire Resistant Fluids

Schroeder filters have been used successfully to filter a variety of fire resistant fluids for over five decades. Filtering these fluids requires careful attention to filter selection and application. Your fluid supplier should be the final source of information when using these fluids. The supplier should be consulted for recommendations regarding limits of operating conditions, material and seal compatibility, and other requirements peculiar to the fluid being used within the conditions specified by the fluid supplier.

High Water Content Fluids

High water content fluids consist primarily of two types: water and soluble mineral base oil, and water with soluble synthetic oil. The oil proportion is usually 5%, but may vary from as low as 2% to as high as 10%.

Standard Schroeder Z1, Z3, Z5, Z10, and Z25 elements are compatible with both types of high water content fluids. Filter sizing should be the same as with 150 SUS (32 cSt) mineral based hydraulic oil. Z1 and Z3 elements may be used; however, element change outs will be more frequent. Some special factors that need to be considered in the selection process include the following:

- All aluminum in the filter housing should be anodized. This can be accomplished by using the "W" adder as shown in the filter model number selection chart.
- When using 95/5 fluids, check with fluid supplier for compatibility with aluminum.
- Buna N or Viton® seals are recommended.
- The high specific gravity and low vapor pressure of these fluids create a potential for severe cavitation problems. Suction filters or strainers should not be used. The Schroeder Magnetic Separator (SKB), page 327, with its low pressure drop, is recommended for pump protection from ferrous or large particles.

Invert Emulsions

Invert emulsions consist of a mixture of petroleum based oil and water. Typical proportions are 60% oil to 40% water. Standard Schroeder filters with Z10 and Z25 media elements are satisfactory for use with these fluids. Filters should be sized conservatively for invert emulsions. These fluids are non-Newtonian—their viscosity is a function of shear. We recommend up to twice the normal element area be used as space and other conditions permit.

Fluid Compatibility: Fire Resistant Fluids (cont.)

Some special factors that need to be considered in the selection process include the following:

- Potential exists for cavitation problems with invert emulsions similar to high water based fluids. SKB suction separators are recommended for pump protection from ferrous or large particles.
- Buna N or Viton® seals are recommended.

Water Glycols

Water glycols consist of a mixture of water, glycol, and various additives. Schroeder Z3, Z5, Z10 and Z25 elements are satisfactory for use with these fluids. Some special factors that need to be considered in the selection process include the following:

- All aluminum in the filter should be anodized. This can be accomplished by using the "W" option as shown in the filter model number selection chart.
- Potential exists for cavitation problems with water glycols similar to high water based fluids. SKB suction separators are recommended for pump protection from ferrous or large particles.
- Buna N or Viton® seals are recommended.

Phosphate Esters

Phosphate esters are classified as synthetic fluids. All Schroeder filters and elements can be used with most of these fluids. Sizing should be the same as with mineral based oils of similar viscosity. Some special factors that need to be considered in the selection process include the following:

- For phosphate esters, specify EPR seals (designated by "H" seal option) for all elements. As a general rule, all Z-Media® (synthetic) is compatible and 10 and 25 µ only E media (cellulose) with phosphate esters.
- For Skydrol®, only 3, 5, 10, and 25 µ Z-Media® (synthetic) should be used, and "H.5" should be designated as the seal option. The "H.5" seal designation calls for EPR seals and stainless steel wire mesh in element construction.

Pressure Drop Correction for Specific Gravity

Pressure drop curves shown in this catalog are predicated on the use of petroleum based fluid with a specific gravity of 0.86. The various fire resistant fluids discussed in this section have a specific gravity higher than 0.86, which affects pressure drop. Use the following formula to compute the correct pressure drop for the higher specific gravity:

$$\text{Corrected pressure drop} = \frac{\text{Fluid specific gravity}}{0.86} \times \text{Catalog pressure drop}$$

Viton® is a registered trademark of DuPont Dow Elastomers.

Skydrol® is a registered trademark of Solutia Inc.

7 Steps to Selecting a Filter

In the new era, systems are getting smaller and more compact, causing flow rates in hydraulic reservoirs to decrease, as well as a tighter space for overall reservoir components.

Without a properly sized filter and element in your machine's reservoir, operators can experience occurrences such as: foaming, cavitation, shortened fluid lifespan, poor response time from hydraulic valves, increase in replacement filter elements, and more valve and pump repairs.

In this section, we will walk you through our 7 Steps for Choosing the Correct Filtration.

Example Parameters: A piston pump and servo system with 20 gpm (76 L/min) pump flow, 30 gpm (144 L/min) return flow, 4000 psi (275 bar) system pressure, and a total system volume of 60 gallons (227 liters), with a non-pressurized reservoir. The fluid is 150 SUS.

Step 1: "Operating Pressures"

Determine the operating pressure of the system you are looking to apply filtration to.

Step 2: "Flow Rate"

Look at all of the characteristics of the fluid that is needing the filtration, including the flow rate.

Step 3: "MVP Components"

Determine what component is the most critical to your operation.

Step 4: "ISO Level"

Reference our chart on page 13 to determine the recommended ISO level of your MVP component (determined in Step 3). This will help you select what media type will help you achieve your cleanliness goal.

Step 5: "Fluid Type"

Ask yourself "what type of fluid is being filtered?" and "what is my main contamination type?" (Reference contamination types on page 16).

Step 6: "Temperature"

Determine the highest and lowest temperatures of your operating fluid.

Step 7: "Piecing It All Together"

Based on the previous steps, you can now take the information learned, calculate overall system differential pressure, and determine the right choice for filtration.

By following these simple steps, we can guarantee you will see cleaner fluid. In addition, all major hydraulic components should be working to expectation, last longer, and ultimately save you and your company money.

Filter Selection Considerations

Filter Location

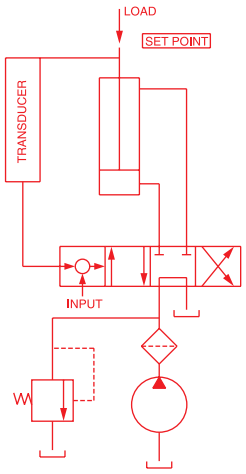

Figure 6(a). Pressure Filtration Circuit

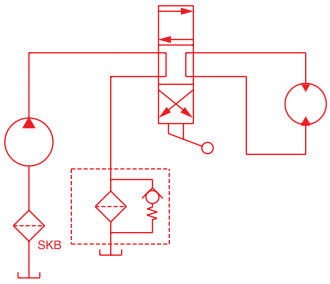

Figure 6(b). Return Line Filtration Circuit

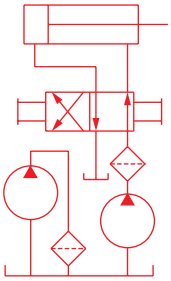

Figure 6(c). Re-circulating Filtration Circuit

Pressure filtration: Pressure filters usually produce the lowest system contamination levels to assure clean fluid for sensitive high-pressure components and provide protection of downstream components in the event of catastrophic failures. Systems with high intermittent return line flows may need only be sized to match the output of the pump, where the return line may require a much larger filter for the higher intermittent flows. See Figure 6(a).

Return line filtration: Return line filters are often considered when initial cost is a major concern. A special concern in applying return line filters is sizing for flow. Large rod cylinders and other components can cause return line flows to be much greater than pump output. Return lines can have substantial pressure surges, which need to be taken into consideration when selecting filters and their locations. See Figure 6(b).

Re-circulating filtration: While usually not recommended as a system's primary filtration (due to the high cost of obtaining adequate flow rates) re-circulating, or off-line, filtration is often used to supplement on-line filters when adequate turnover cannot be obtained with the latter. It is also often an ideal location in which to use a water removal filter. Off-line re-circulating filters normally do not provide adequate turnover flow rates to handle the high contamination loading occasioned by component failures and/or inefficient maintenance practices. See Figure 6(c).

Suction filtration: Micronic suction filters are not recommended for open-loop circuits. The cavitation these filters can cause significantly outweighs any advantage obtained by attempting to clean the fluid in this part of the system. SKB magnetic suction separators are recommended, as they will protect the pump from large and ferrous particles, without the risks of cavitation.

Breather filtration: Efficient filter breathers are required for effective contamination control on non-pressurized reservoirs and should complement the liquid filtration component.

Multiple filtration: For systems incorporating large total fluid volumes, it may be necessary to employ filters in more than one location. Multiple pressure filters, pressure and return line filters, and recirculating filters are examples of multiple filtration applications.

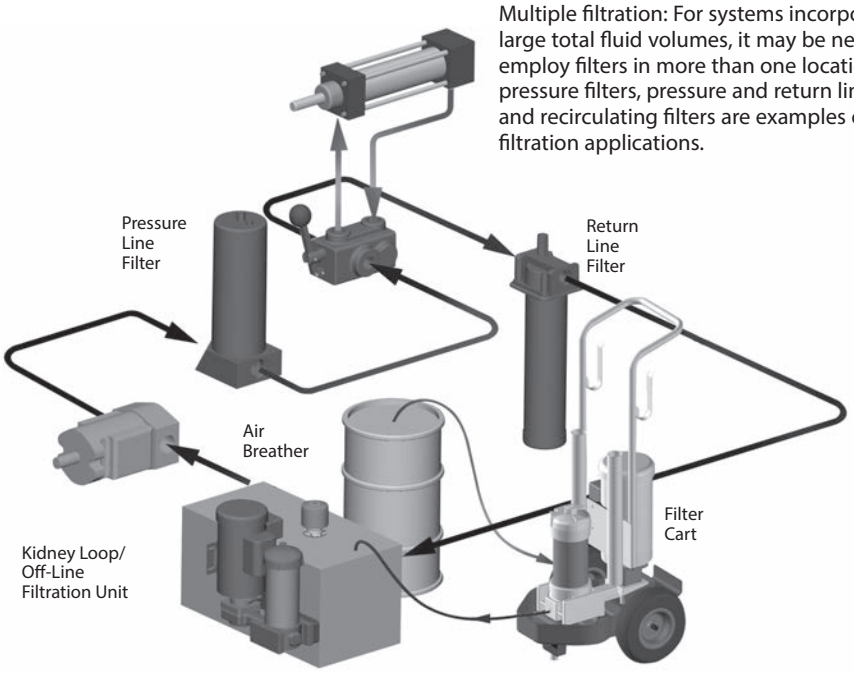

Parameters: A piston pump and servo system with 20 gpm (76 L/min) pump flow, 30 gpm (114 L/min) return flow, 4000 psi (275 bar) system pressure, and total system volume of 60 gallons (227 liters), with a non-pressurized reservoir.

Step 1 example. The servo valve is the system's most sensitive component. Referring to Figures 2 and 3 (page 13), you can see that a cleanliness level (ISO Code) of 16/14/11 or better is recommended for a high pressure system containing a servo valve.

Step 2 example. Table 8 recommends the Schroeder Z5 element media or finer to achieve a cleanliness level of 16/14/11.

Step 3 example. A combination of a pressure filter upstream of the servo valve and a return line filter would provide cost effective contamination control for servo systems.

Step 4 example. Filter model DF40, shown on page 65, is selected as the appropriate pressure filter because of its 30 gpm and 4000 psi capacities. A look at the Element Selection Chart for the DF40 located on page 67 verifies that the CZ5 element will handle 20 gpm, and the appropriate model number is DF40-1CZ5.

The ZT in-tank return line filter is selected for the 30 gpm return flow and the Z5 media. As shown in the model selection chart for the ZT on page 266, the proper model number to meet the specifications is ZT-8ZZ5.

Step 5 example. Using our Accessories Catalog; L-4329, select the ABF-3/10-S breather/strainer.

Step 6 example. Implement the appropriate manufacturing, assembly and maintenance contamination control procedures.

Step 7 example. Check start-up and ongoing system cleanliness (ISO Codes). Schroeder offers oil sampling kits that can be forwarded to a lab for particle counting and determination of cleanliness levels.

Table 8. Schroeder Element Media Recommendations

Desired Cleanliness Levels (ISO Code)	Schroeder Media
20/18/15-19/17/14	Z25
19/17/14-18/16/13	Z10
18/16/13-15/13/10	Z5
15/13/10-14/12/9	Z3
14/12/9-13/11/8	Z1

Rated Fatigue Pressure

The application of individual filters should take fatigue ratings into consideration when there are flow or pressure variations creating pressure peaks and shock loads.

Typical hydraulic systems that use highly repetitive operations include plastic injection molding machines, die-cast machines, and forging and stamping press systems. In these and other similar applications, rated fatigue pressure should be considered when selecting a filter.

It has been common practice in the fluid power industry to establish component ratings for maximum operating pressure based on the minimum yield pressure, which is usually one third of the minimum yield pressure for higher-pressure components and one fourth of the minimum yield pressure for lower-pressure components. This rating method has proved satisfactory for many years, but it does not directly address the subject of fatigue.

The National Fluid Power Association has introduced a method (NFPA T2.6.1) for verifying the fatigue pressure rating of the pressure-containing envelope of a metal fluid power component. In this method, components are cycled from 0 to test pressure for 1 million cycles (10 million cycles is optional). The rated fatigue pressure (RFP) is verified by testing. We establish the desired RFP from design, then we calculate the cycle testing pressure (CTP), and then conduct tests at CTP per 1,000,000 cycles.

The T2.6.1 Pressure Rating document is available from the National Fluid Power Association, 3333 N. Mayfair Road, Milwaukee, WI 53222-3219.

Table 9. Fatigue Pressure Ratings

Model	Rated Fatigue Pressure psi (bar)	Model	Rated Fatigue Pressure psi (bar)
NF30/NFS30	2400 (165)	LW60	5800 (400)
YF30	1800 (125)	ZT	90 (6)
DF40/CF40	1800 (125)	RT/LRT	90 (6)
PF40	2500 (173)	QT/IRF	100 (7)
LC50	5000 (350)	KF3	290 (20)
CFX30	1800 (125)	KL3	300 (20)
RF60	3500 (240)	TF1	270 (19)
CF60	4000 (276)	LF1/MLF1	250 (17)
VF60	3300 (230)	RLD	350 (24)
KF30	2500 (170)	RLT	750 (52)
TF50	3500 (240)	GH	725 (50)
KF50/KC50	3500 (240)	GHHF	725 (50)
KFH50	3500 (240)	SRLT	750 (52)
MKF50	3500 (240)	KF8/QF5/3QF5	500 (35)
KC65	5500 (380)	K9/2K9/3K9	750 (52)
NOF50-760	4000 (275)	QF15/QLF15/SSQLF15	800 (55)
FOF60/PF40	4000 (275)	HS60	6000 (415)
CTF60	6000 (415)		

Contact Factory For: RFS50, FOF30, NOF30-05, MTA, MTB, KT, BFT, PAF1, MAF1, MF2, RTI, KTK, LTK, QF5 and QFD5 Fatigue Ratings.

All water service and GeoSeal® models match their standard model for Rated Fatigue Pressure.

Manifold Mounting

In some filtration applications, it is advantageous to have the inlet and outlet ports mount directly onto a block without any hydraulic hose in between. Schroeder offers several such manifold-mounted filter models, including NFS30, YF30, PF40, LC50 DF40, RFS50, KF30, TF50, KF50, KC50, and KFH50. Drawings for these porting options are labelled "Optional Subplate Porting" and are included on respective catalog pages.

No-Element Indicator

The No-Element Indicator is a unique, patented signaling device designed to alert the user if no filter element is present in the housing. This virtually eliminates any possible confusion on the part of the user that the filter contains an element and is functioning in a normal manner.

The tamper proof system utilizes a patented internal valve design. If the element is not installed in the housing, the valve restricts flow, causing a high pressure drop. The high pressure drop, in turn, causes the Schroeder Dirt Alarm® to indicate that the element is not installed in the housing.

The only way to deactivate the indicator is to install the element in the housing.

This feature is available in the following filter models: RT, TF1, KF3, CF40, DF40, CF60, TF50, KF30, KF50, KC50, KC65, and MKF50 that are equipped with a Schroeder Dirt Alarm®. No-element indicator is not available when the indicator is placed in the cap in base-ported filters.

Ordering Information

For each filter that is shown in Sections 3, 4, 5 , and 6 there is a Model Number Selection Chart. This chart lists all the configurations and accessories available for that specific filter.

Model numbers for all Schroeder filters are formulated by listing the appropriate codes, from left to right, according to the designated boxes shown in the chart. The letter or letter/number combination identifies the basic filter series. For instance, as shown in Figure 7, KF303KZ10PD5 designates a KF30 high-pressure, base-ported filter with three synthetic 3 µ elements, Buna N seals, 1½" NPTF porting, and a visual cartridge Dirt Alarm®.

Figure 7. Model Number Selection

How to Build a Valid Model Number for a Schroeder KF30:

BOX 1	BOX 2	BOX 3	BOX 4	BOX 5	BOX 6	BOX 7	BOX 8	BOX 9	BOX 10
KF30 –	–	–	–	–	–	–	–	–	–

Example: NOTE: Only boxes 8 and 10 may contain more than one option

BOX 1	BOX 2	BOX 3	BOX 4	BOX 5	BOX 6	BOX 7	BOX 8	BOX 9	BOX 10	
KF30 –	3K –	Z –	10 –	–	–	P –	–	D5 –	–	= KF303KZ10PD5

BOX 1

Filter Series
KF30
KFN30 (Non-bypassing: requires ZX high collapse elements)
GKF30 (GeoSeal®)
KF50
KFN50 (Non-bypassing: requires ZX high collapse elements)
GKF50 (GeoSeal®)

BOX 2

Number & Size of Elements	
1	= K, KK, 27K
2	= K
3	= K
GeoSeal® Options	
1	= KG, KKG, 27KKG
2	= KG
3	= KG

BOX 3

Media Type	
Omit =	E Media (Cellulose)
AS =	Anti-Stat Media (synthetic)
Z =	Excellement® Z-Media® (synthetic)
ZW =	Aqua-Excellement® ZW Media
ZX =	Excellement® Z-Media® (High Collapse centertube)
W =	W Media (water removal)
M =	Media (reusable metal mesh) N size only

BOX 4

Micron Rating		
1	= 1 Micron	(Z, ZW, ZX media)
3	= 3 Micron	(AS,E, Z, ZW, ZX media)
5	= 5 Micron	(AS, Z, ZW, ZX media)
10	= 10 Micron	(AS,E,M, Z, ZW, ZX media)
25	= 25 Micron	(E, M, Z, ZW, ZX media)
60	= 60 Micron	(M media)
150	= 150 Micron	(M media)
260	= 260 Micron	(M media)

BOX 5

Seal Material	
Omit	= Buna N
V	= Viton®
H	= EPR
H.5	= Skydrol® compatibility

BOX 6

Magnet Option	
Omit	= None
M	= Magnet inserts (not available w/ indicator in cap)

BOX 7

Porting	
P	= 1 ½" NPTF
P32	= 2" NPTF
S	= SAE-24
F	= 1 ½" SAE 4-bolt flange Code 61
F32	= 2" SAE 4-bolt flange Code 61 (KF30) *KF30 Only
O	= Subplate
B24	= ISO 228 G-1 ½"

BOX 8

Options	
Omit	= None
X	= Blocked bypass
50	= 50 psi bypass setting
L	= Two ¼" NPTF inlet & outlet female test ports
U	= Series 1215 7/16 UNF Schroeder Check Test Point installed in cap (upstream)
UU	= Series 1215 7/16 UNF Schroeder Check Test Point installed in block (upstream and downstream)

BOX 9

Dirt Alarm® Options		
	Omit =	None
Visual	D =	Pointer
	D5 =	Visual pop-up
	D5C =	D5 in cap
	D9 =	All stainless D5
Visual with Thermal Lockout	D8 =	Visual w/ thermal lockout
	D8C =	D8 in cap
Electrical	MS5 =	Electrical w/ 12 in. 18 gauge 4-conductor cable
	MS5LC =	Low current MS5
	MS10 =	Electrical w/ DIN connector (male end only)
	MS10LC =	Low current MS10
	MS11 =	Electrical w/ 12 ft. 4-conductor wire
	MS12 =	Electrical w/ 5 pin Brad Harrison connector (male end only)
	MS12LC =	Low current MS12
	MS16 =	Electrical w/ weather-packed sealed connector
	MS16LC =	Low current MS16
	MS17LC =	Electrical w/ 4 pin Brad Harrison male connector
Electrical with Thermal Lockout	MS5T =	MS5 (see above) w/ thermal lockout
	MS5LCT =	Low current MS5T
	MS10T =	MS10 (see above) w/ thermal lockout
	MS10LCT =	Low current MS10T
	MS12T =	MS12 (see above) w/ thermal lockout
	MS12LCT =	Low current MS12T
	MS16T =	MS16 (see above) w/ thermal lockout
	MS16LCT =	Low current MS16T
	MS17LCT =	Low current MS17T
Electrical Visual	MS =	Cam operated switch w/ ½" conduit female connection
	MS13DC =	Supplied w/ threaded connector & light
	MS14DC =	Supplied w/ 5 pin Brad Harrison connector & light (male end)
Electrical Visual with Thermal Lockout	MS13DCT =	MS13 (see above), direct current, w/ thermal lockout
	MS13DCLCT =	Low current MS13DCT
	MS14DCT =	MS14 (see above), direct current, w/ thermal lockout
	MS14DCLCT =	Low current MS14DCT

BOX 10

Additional Options	
Omit	= None
N	= No-Element Indicator (not available w/ KFN30/KFN50/ GKF30/GKF50 or housings w/ indicator in cap)
G509	= Dirt Alarm and drain opposite standard
G588	= Electric Switch and drain opposite standard

Model Number Selection

NOTES:

Box 2. Number of elements must equal 1 when using KK or 27K elements. Replacement element part numbers are identical to contents of Boxes 2, 3, 4 and 5. Double and triple stacking of K-size elements can be replaced by single KK and 27K elements, respectively. ZW media not available in 27K length.

Box 5. H.5 seal designation includes the following: EPR seals, stainless steel wire mesh on elements, and light oil coating on housing exterior. Viton® is a registered trademark of DuPont Dow Elastomers. Skydrol® is a registered trademark of Solutia Inc.

Box 7. For options F & F32, bolt depth .75" (19 mm).

For option O, O-rings included; hardware not included.

Box 8. X and 50 options are not available with KFN30.

Box 9. Standard indicator setting for non-bypassing model is 50 psi unless otherwise specified.

Box 10. Options N, G509 and G588 are not available with KFN30. N option should be used in conjunction with dirt alarm.

Element Selection Chart for Flow Requirements

For each filter shown in the catalog, there is an element selection chart to determine the correct element to be used for a particular flow requirement (see Figure 8 for an example). The chart uses a petroleum-based hydraulic fluid with 150 SUS viscosity.

The process involves the following: Determine the working pressure of the system (3000 psi in this example) and the maximum flow (75 gpm). Then select the media (Z-Media®), and the micron filtration (3 µ). For example, the filter selected, following the above steps, is a KF30-3KZ3-P-D5. If the system pressure is 5000 psi and all other parameters are the same, then the model number would be KF50-3KZ3-P-D5.

Figure 8. KF30 Housing and Element Selection Chart for Flow Requirement

Pressure	Element Series	Element Part No.	Element selections are predicated on the use of 150 SUS (32 cSt) petroleum based fluid and a 40 psi (2.8 bar) bypass valve.										
To 3000 psi (210 bar)	E Media	K3	1K3		2K3			3K3	See MFK50				
		K10	1K10			2K10		3K10	3K10	See MFK50			
		K25	1K25						2K25				
	Z Media	KZ1	1KZ1				2KZ1			3KZ1			
		KZ3	1KZ3						2KZ3	3KZ3			
		KZ5	1KZ5						2KZ5		3KZ5		
		KZ10	1KZ10							2KZ10		3K10	
		KZ25	2KZ25								2KZ25		
	Flow	gpm	0	25	50	75	100	125	150				
		(L/min)	0	100	200	300	400	500	600				

Shown above are the elements most commonly used in this housing. requires 2" porting (P32)

Correcting for Viscosity and Specific Gravity

Element pressure drop information in this publication is based on the viscosity (150 SUS or 32 cSt) and specific gravity (0.86) of the most commonly used hydraulic oils.

If the viscosity or specific gravity of the fluid you are designing for is different from these, use the following formulas to obtain the correct ΔP values.

$$\text{Corrected element } \Delta P = \Delta P \text{ from curve} \times \frac{\text{SUS viscosity}}{150} \times \frac{\text{specific gravity}}{0.86}$$

OR

$$\text{Corrected element } \Delta P = \Delta P \text{ from curve} \times \frac{\text{cST viscosity}}{32} \times \frac{\text{specific gravity}}{0.86}$$

FILTER ELEMENTS

v.040224

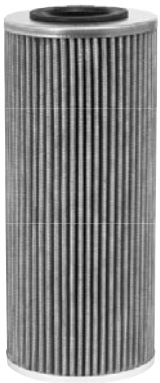

EXCELLEMENT® Synthetic Microglass Filtration Media

Schroeder ORIGINAL ELEMENTS

Z-Media® Elements (Synthetic)

The special class of micro-glass and other fibers used in Z-Media® are manufactured with utmost precision, to specific thicknesses and densities, and bonded with select resins to create material with extra fine passages. No other filter media can provide the benefits of Schroeder's Excellement® Z-Media®: maximum dirt-holding capacity, superior particle capture, excellent beta stability, minimum pressure drop, high flow rate and low operating cost.

The typical multiple layer construction (shown in Figure 9) has evolved from comprehensive laboratory testing to provide extended element life and system protection. Each successive layer performs a distinct and necessary function. The outermost layer is designed to maintain element integrity. Beyond this layer is a spun bonded scrim, offering coarse filtration and protection for the filtering layers within. Multiple sheets of fine filtering media follow, providing intricate passageways for the entrapment of dirt particles. Together, the various layers of filter media provide the ideal combination for peak filtration performance.

Figure 9. Cutaway of Excellement® Z-Media®

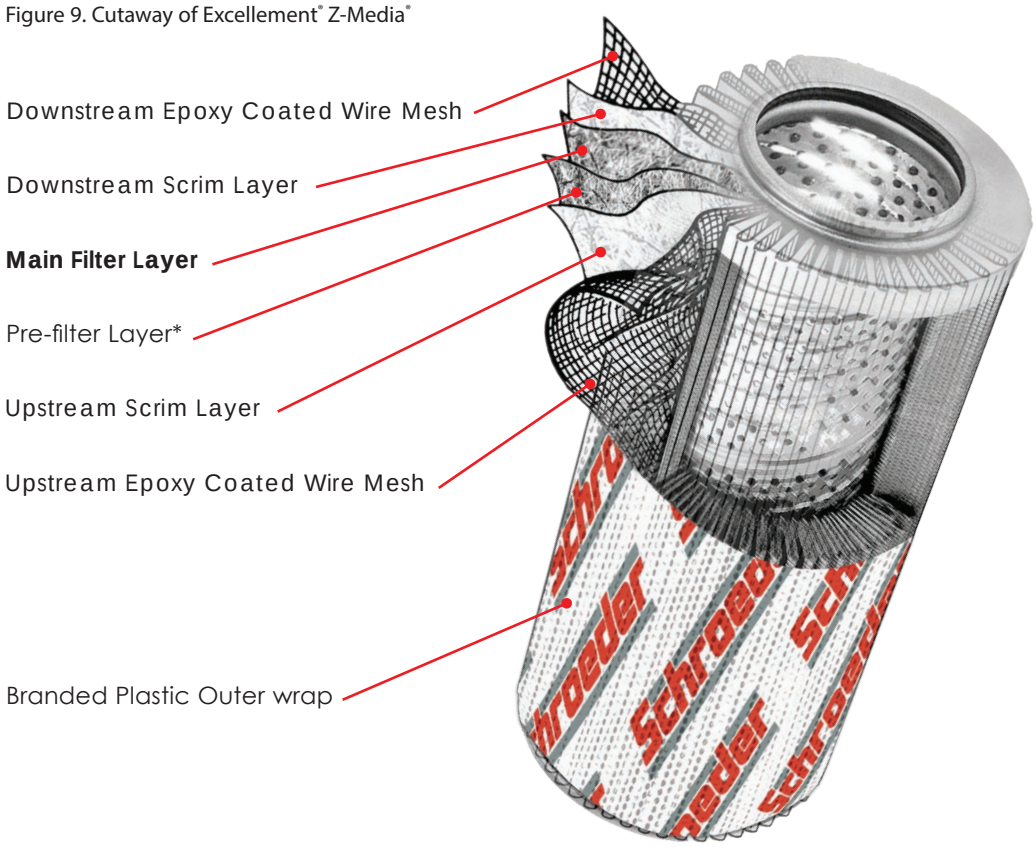

Schroeder's complete line of quality filtration elements—including Schroeder's original element designs, BestFit® replacement elements, CoreCentric® coreless elements and DirtCatcher®—are manufactured with Excellement® Z-Media®.

The better efficiencies, excellent stability, lower pressure drops, and higher dirt holding capacities provided by Excellement® Z-Media® mean cleaner oil, longer element life, and less downtime. They outlast, outperform, and excel in every measurable benchmark.

The Excellement® Z-Media® series of filter elements have been designed, tested, and proven to be the best performing elements available on the market today.

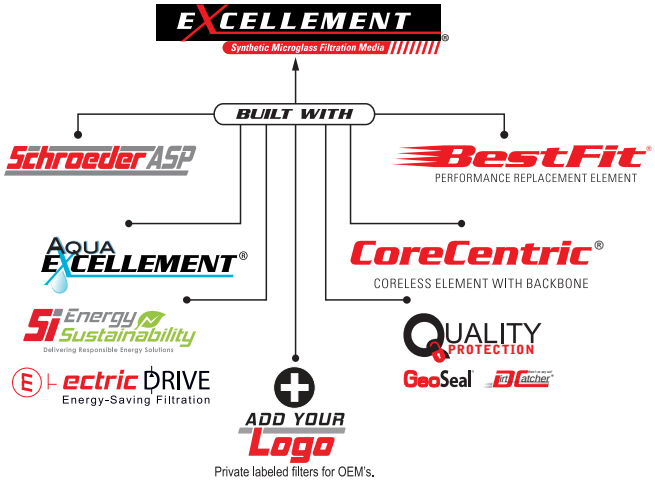

Features and Benefits

- Better flow characteristics: Lower pressure drop and improved flow stability
- Improved efficiency: Cleans oil in less time and improved reliability
- Higher dirt holding capacity:Longer element life, lower maintenance costs (labor)and decreased inventory costs (parts)
- Multi-layer construction: Each layer performs a distinct function
- Beta stability:Excellement® Z-Media® maintains efficiency as differential pressure increases

Excellement® Elements Have Improved Filtration Ratios

Schroeder Z-Media® elements are tested under cyclic flow conditions to verify flow fatigue characteristics. Extra strength and rigidity are engineered into every one of these filter elements through the use of epoxy-coated steel wire mesh and additional support layers. (ZX Series high crush strength capabilities are available for 3000 psi applications.)

A wide range of Schroeder Z-Media® elements enable you to achieve the desired cleanliness level for your system. Developed through comprehensive laboratory testing and field performance studies, these elements have been proven effective. Shown in Table 10 are cleanliness levels that can be achieved using Z-Media® filter elements in various applications.

Table 11 shows the ISO 16889 filtration ratios (Betas) for Schroeder Z-Media® elements Z1, Z3, Z5, Z10 and Z25. Figure 10 depicts the information in Table 11 graphically and provides corresponding % efficiencies. The numbers contained in the tables are simply specific data points from the plots for the respective media shown. The filtration ratio (Beta) is shown on the left side and the equivalent particle capture efficiency (%) is shown on the right for particle sizes shown across the bottom. The filtration ratio (in Table 13) indicates the particle size at which the filtration ratio for the element is greater than a given number.

Table 10. Typical Field Application Results

Application	Cleanliness* Level
Railroad Maintenance-of-Way Equipment	ISO 19/17/14
Power Generation Turbine Skid	ISO 17/15/13
Timber Harvesting Equipment	ISO 17/15/12
Plastic Injection Molding Machine	ISO 17/15/12
Paper Mill Lube System	ISO 16/14/11
Aircraft Test Stand	ISO 15/13/10
Hydraulic Production Test Stand	ISO 13/11/8

*Higher or lower levels can be obtained by selecting coarser or finer Schroeder Z-Media®, respectively.

Table 11. Z-Media® Filtration Ratios

Element Media	Filtration Ratio Per ISO 16889			
	ßx(c) ≥ 75 (98.7%)	ßx(c) ≥ 100 (99%)	ßx(c) ≥ 200 (99.5%)	ßx(c) ≥ 1000 (99.9%)
Z1	<4.0	<4.0	<4.0	4.2
Z3	<4.0	<4.0	<4.0	4.8
Z5	<4.0	4.2	4.8	6.3
Z10	6.8	7.1	8.0	10.0
Z25	16.3	17.1	19.0	24.0

Series ZX High Collapse Elements (Synthetic)

Schroeder Z-Media® elements are tested under cyclic flow conditions to verify flow fatigue characteristics. Extra strength and rigidity are engineered into every one of these filter elements through the use of epoxy-coated steel wire mesh and additional support layers. (ZX Series high crush strength capabilities are available for 3000 psi applications.)

A wide range of Schroeder Z-Media® elements enable you to achieve the desired cleanliness level for your system. Developed through comprehensive laboratory testing and field performance studies, these elements have been proven effective. Shown in Table 10 are cleanliness levels that can be achieved using Z-Media® filter elements in various applications.

EXCELLEMENT®
Synthetic Microglass Filtration Media

Excellement Elements Have High Dirt Holding Capacities

Dirt holding capacity (DHC), simply stated, is the amount of solid contamination that an element can hold before the filter housing reaches its terminal bypass setting. The higher the dirt holding capacity, the longer the element will last. This translates to fewer element purchases, less frequent equipment shutdowns, decreased maintenance time, and reduced inventory. In short, it means money saved.

Figures 11(a) - 11(e). DHC Comparison for Z-Media® Elements and Competition

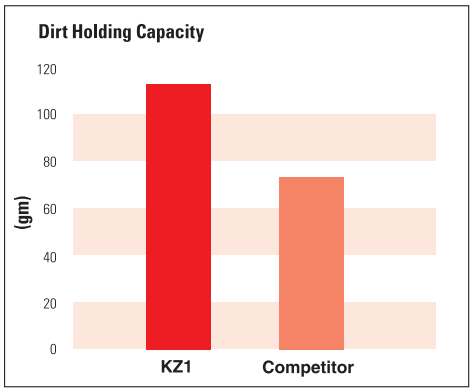

11(a)

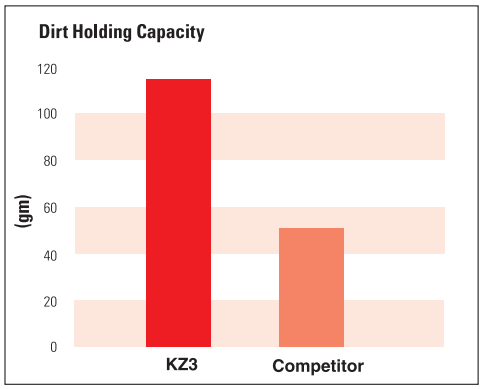

11(b)

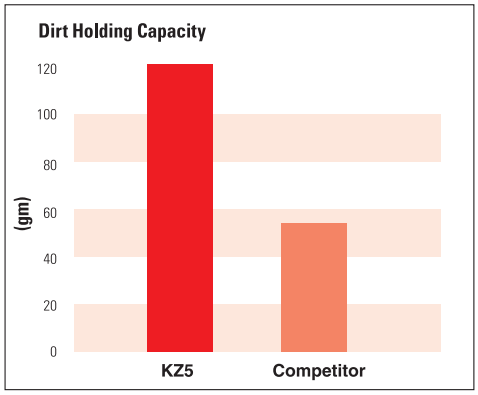

11(c)

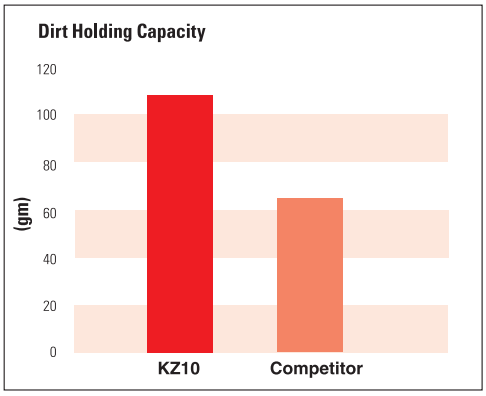

11(d)

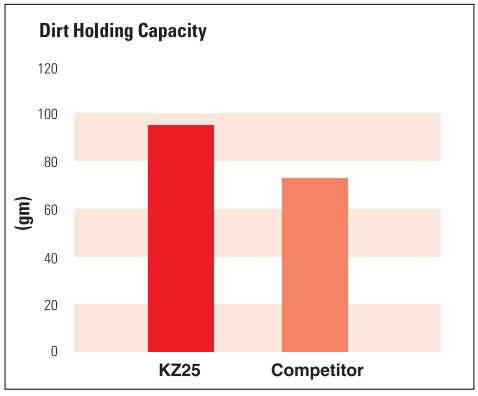

11(e)

Table 12. Typical Dirt-Holding Capacities for Z-Media® Element (in grams)

Type Medium	Element Size (Diameter x Length)				
	2" x 6" 6R	3" x 8" 8T	4" x 9" K	5" x 18" BB	6" x 39" Q
Z1	15	51	112	268	1485
Z3	15	52	115	275	1525
Z5	16	59	119	301	1536
Z10	14	55	108	272	1432
Z25	15	56	93	246	1299

The data shown represents the cumulative results of multi-pass tests in accordance with ISO 16889. Tests are conducted on a regular basis at Schroeder's own laboratory and at approved independent facilities.

Cost Per Gram Analysis/ Excellement® Efficiency®

A monetary value can be calculated for a filter element by considering its dirt holding capacity and efficiency in combination with its cost. To make this determination, first find out how much you're spending to clean your fluid to a desirable cleanliness level. Then figure out how much contamination (in grams) that the element is actually retaining. These two numbers will make it possible to calculate the grams of dirt per dollar spent. It's one thing to clean the oil, but it's another to clean the oil and simultaneously provide maximum element life. With Excellement® Z-Media®, you don't need to sacrifice element life to achieve high efficiency.

We are confident that the high efficiencies, exceptional dirt holding capacities, and low pressure drops—combined with Schroeder's competitive prices— make elements made
with Excellement® Z-Media® the best value in the market today.

Figure 10. Z-Media® Excellement® Efficiency

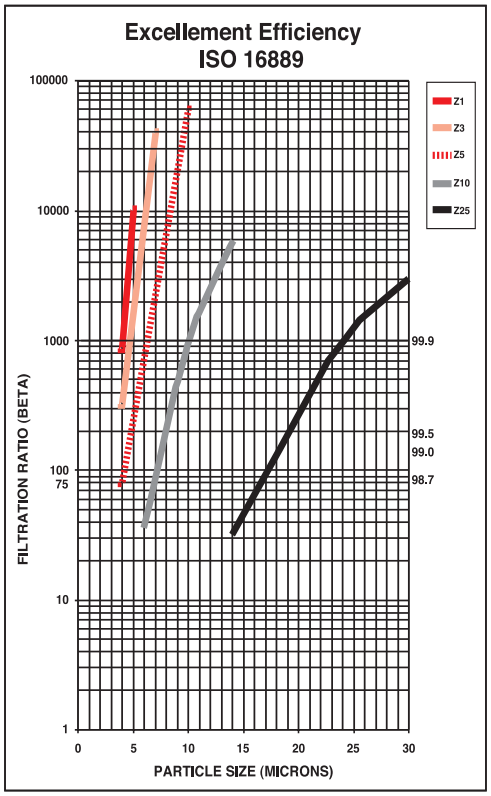

Figure 12. Grams of Dirt Retained per Dollar Spent

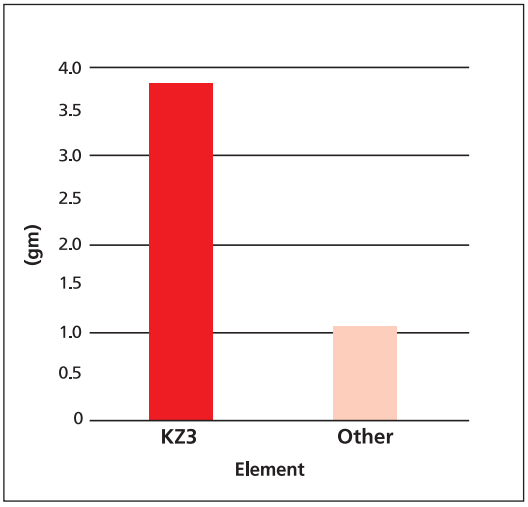

Element Case Weights

In proportion to the high volume of filter elements we make and ship, one of the most frequently asked questions our order desk receives involves the weights of various cases of elements. In an effort to include this information in this edition of the catalog, we made the assumption that the various micron ratings within a media type weigh the same; i.e., a KZ1 weighs approximately the same as a KZ25. The following table represents our findings given the above assumption:

		Case Lot	Weight (lb.)			Case Lot	Weight (lb.)			Case Lot	Weight (lb.)
A	paper	12	7	K	paper	12	17	8Z	paper	12	12
AZ	synthetic (Z)	12	8	KZ	synthetic (Z)	12	22	8ZZ	synthetic (Z)	12	13
BB	paper	6	29	KW	Water Removal	12	18	9V	synthetic (Z)	12	14
BBZ	synthetic (Z)	6	29	KK	paper	6	18	14V	synthetic (Z)	6	10
C	paper	12	7	KKZ	synthetic (Z)	6	20	14C	synthetic (Z)	6	11
CZ	synthetic (Z)	12	8	27K	paper	6	20	18L	synthetic (Z)	6	20
CC	paper	12	11	M	paper	12	33	39Q	paper	1	17
CCZ	synthetic (Z)	12	15	N	paper	12	4	39QPML	synthetic (Z)	1	18
FZX3	synthetic (Z)	12	3	NZ	synthetic (Z)	12	7	39QCL	synthetic (Z)	1	11
FZX10	synthetic (Z)	12	3	NN	paper	12	6	16Q	paper	1	8
6G	synthetic (Z)	12	8	NNZ	synthetic (Z)	12	9	16QPML	synthetic (Z)	1	15
9G	synthetic (Z)	12	13	6R	synthetic (Z)	12	10	16QCL	synthetic (Z)	1	3

U.S. Patent D658740

GeoSeal®

GeoSeal® Elements

Far too often, customers make purchasing decisions based solely on price, only to be extremely disappointed with the poor quality delivered by low cost imitations. To make the matter worse, the customer often points an accusing finger at the filter housing manufacturer for poor performance, rather than the inadequate element they used as a replacement for the original Schroeder element.

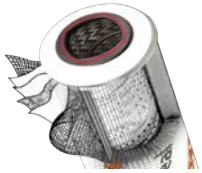

Figure 1. Filter element with GeoSeal grommet.

GeoSeal® is a patented offering from Schroeder that provides a unique way for OEM's to retain replacement element business and to keep a filter's performance at the level that it was supplied. The idea is brilliantly simple: the critical sealing arrangement between a filter housing and its replacement element takes on a shape other than the standard circular arrangement. Specifically, the element grommet & mating bushing are given a new geometric shape. Figures 1 & 2 show the initial configuration being used.

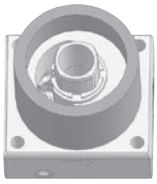

Figure 2. Filter housing (cut-away) with GeoSeal bushing.

Availability

Currently, the GeoSeal® design is available on the K-size element and in the following Schroeder filter series: KF30, KF50, KC50, KC65, MKF50, K9, 2K9, 3K9, KF3, KL3, MLF1, KF5, RT, ZT, and LRT

How To Order

To order the filter housing and element incorporated with the GeoSeal® design:

- "G" is added to the front of the housing model code (KF30, KF50, KC50, KC65, MKF50, KF3, KL3, MLF1, KF5, K9, 2K9, 3K9, RT, ZT, and LRT).
- "BG" is added to the element model code for RT (one end of the element has the GeoSeal®; the other end has an integrated bypass valve)

GeoSeal® Filters Selection Guide

		Pressure psi (bar)	Flow gpm (L/min)	Element Length/Size	Page
GeoSeal® Filters	**High Pressure GeoSeal® Filters**				
	GKF30 GeoSeal®	3000 (210)	100/150 (380/570)	KG, KKG, 27KG	99
	GKF50 GeoSeal®	5000 (345)	100/150 (380/570)	KG, KKG, 27KG	99
	GKC50 GeoSeal®	5000 (345)	100/150 (380/570)	KG, KKG, 27KG	107
	GMKF50 GeoSeal®	5000 (345)	200 (760)	KG, KKG, 27KG	111
	GKC65 GeoSeal®	6500 (450)	100 (380)	KG, KKG, 27KG	115
	Medium Pressure GeoSeal® Filters				
	GKF5 GeoSeal®	500 (35)	100 (380)	KG	171
	GK9 GeoSeal®	900 (60)	100 (380)	KG, KKG, 27KG	179
	G2K9 GeoSeal®	900 (60)	100 (380)	KG, KKG, 27KG	183
	G3K9 GeoSeal®	900 (60)	100 (380)	KG, KKG, 27KG	183
	Low Pressure GeoSeal® Filters				
	GKF3 GeoSeal®	300 (20)	100 (380)	KG, KKG, 27KG	225
	GKL3 GeoSeal®	300 (20)	120 (455)	KG, KKG, 27KG, 18LG	229
	GMLF1 GeoSeal®	300 (20)	200 (760)	KG	237
	GZT GeoSeal®	100 (7)	40 (150)	8GTZ	257
	GRT GeoSeal®	100 (7)	100 (380)	KBG, KKBG, 27KBG	269
	GLRT GeoSeal®	100 (7)	150 (570)	18LG	277

Private Labeled Elements

Schroeder offers a full line of branding solutions for air breathers, spin-ons, and replacement elements. Using the Element Private Label Form (L-2993), OEMs can obtain Schroeder elements with their very own custom logo (for Spin-on elements and air breathers, reference L-2994 on our website). Furnishing elements with custom branding enables OEMs to capture their aftermarket element business. Custom labeled products also protect against the use of unauthorized elements, thus reducing the potential of field warranty issues. Additionally, private branded products are proprietary and will not be shared with others without written consent from the OEM.

Steps for Establishing an Outer Wrap/End Cap Markings

1. Elements can be private labeled by marking the end caps, adding a private labeled plastic outerwrap, or both.
2. Customer name and part number will be etched on to one of the end caps with Schroeder date codes unless otherwise specified.
   a. Logos can be laser etched onto the end cap if space allows on the desired element (a .DXF file of the logo is required).
3. When requesting a plastic outer wrap, the customer must supply all artwork in a vector file format (.AI or .EPS).
4. Once the artwork is received, a RIP file (used to print the wrap) will be created and a sample swatch will be provided for customer approval (average lead time is approximately 2 weeks).
5. The sample printed polyester swatch will be sent to the customer for approval. The sample swatch can be temporarily wrapped around a SBF-9600-8 element, but this must be requested.
6. Once the customer has approved the sample, element part numbers (specific to element size) can be established and structured. Cost, delivery and required minimum quantity may depend on element size and private labeling style.

Packaging Capabilities

Schroeder has the ability to brand both individual and master cartons as requested. We can apply the customer name, part number, logo (black and white - .jpg file), and other customer texts. Bar coding and customer pre-printed boxes can also be requested (set up fees and minimum order quantities are required for customer pre-printed boxes).

Extra Aftermarket Retention Advantages:

Incorporating a private labeling program has shown that upwards of 60% of aftermarket element business is retained. Instituting of a private branding program also protects against the use of inferior and/or unqualified replacement element substitutions.

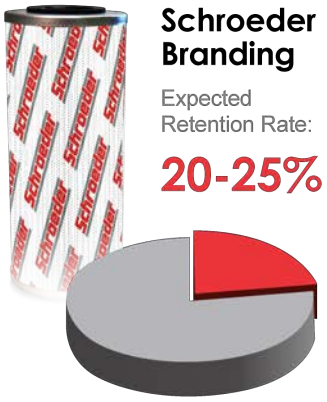

Patent # 7384547

DirtCatcher® Elements

DirtCatcher® elements from Schroeder offer a superior alternative to inside-out filtration. The patented outer shell prevents contaminants from falling back into the system during element changes while still providing the excellent dirt retention of Excellement® media. DirtCatcher® elements are currently available in single and double length K, BB, and 18L size elements, and feature Excellement® media within.

Currently, DirtCatcher® elements can be purchased separately or as part of our RT, KF3, KF8, BFT, and LRT filter assemblies.

The DirtCatcher® solution provides peace of mind to those concerned with dirt escaping from elements during the removal process while delivering all the advantages of Schroeder original (outside-in flow) elements:

- Better Pressure Drop
- Greater Surface Area
- Better Pleat Stability

This design is only available from Schroeder. It goes without saying that DirtCatcher's unique design also allows OEM's to retain 100% of after-market business.

Anti Stat Anti Stat PREMIUM

Anti-Static Elements

During the production of hydraulic oils, “additive packages” are introduced into the base oils to give the fluids certain characteristics they need for the demanding conditions of today’s systems. The additives improve viscosity, reduce friction, prevent wear, and allow the fluid to tolerate high temperatures without oxidation.

Some oils are produced with toxic aromatics and heavy metals, with a high electrical conductivity, but because of their toxicity and potential threat to the environment, they no longer comply with current, international environmental standards. Other groups of oils are produced with the appropriate, approved additive packages, often labeled as highly refined or synthetic. They contain no toxins or carcinogens, and are free of heavy metals, but due to their metal-free nature, they have a lower electrical conductivity rating.

Low electrical conductivity means that any charges that are generated through the oil flow may not be dissipated quick enough, thus causing sparking. Ultimately, this can cause explosions in the reservoir or damage to vital hydraulic components, such as valves and filters.

The sparks can also interfere with or damage expensive electronic components, and form oil-ageing deposits, such as varnish. Varnish then settles on the oily surfaces of the vital components and has a detrimental effect on how well your machine functions. Potential consequences of varnish also includes seized valve spools, overheated solenoids, and extremely short filter element service life.

The Anti-Stat and Anti-Stat Premium elements were developed to greatly reduce or eliminate electrostatic discharging problems that can occur during filtration of hydraulic and lube fluids. By combining proven Excellement® media and ASP® technology, it is now possible to offer both high filtration efficiency and electrical conductivity.

Other key areas that can contribute to Electrostatic Discharge:

- Filter Media – media layer construction can influence high voltage charge
- Hydraulic Fluids – group II and III have low conductivity
- Temperature – higher voltage charge will generally exist with lower temperature

Anti-Stat versus Anti-Stat Premium Media

Since levels of ESD in a hydraulic system can vary, Schroeder Industries provides two expertly engineered anti-static element options for remediating static buildup in hydraulic equipment:

Anti Stat

- Standard anti-static element option
- High filtration efficiency
- Prevents static buildup in fluids with medium conductivity levels and moderate levels of ESD
- Engineered for fluid conductivity levels of 100 pS/m and **higher**

Anti Stat PREMIUM

- Advanced anti-static element option
- High filtration efficiency
- Prevents static buildup in fluids with low conductivity levels and extreme levels of ESD
- Engineered for fluid conductivity levels of 100 pS/m and **lower**

Choosing The Right Anti-Static Elements For Your Application

Depending on the level of conductivity in your hydraulic fluid, different element options are best suited to High, Medium, or Low/Critical conductivity. Below is a selection of commonly used oil types, and the media Schroeder Industries recommends for each. Remember: **higher conductivity** means less static, and **lower conductivity** means more static.

EXCELLEMENT® Synthetic Microglass Filtration Media

Excellement® media is appropriate for oils with **high conductivity** (>500 pS/m)

500 pS/m

Anti Stat

Anti-Stat media is appropriate for oils with **medium conductivity** (>100 pS/m).

100 pS/m

Anti Stat PREMIUM

Anti-Stat Premium media is appropriate for oils with **low conductivity** (<100 pS/m). This is the where most critical levels of ESD can occur.

Conductivity [pS/m]

Conductive Hydraulic & Lubricating Oils

Fuchs Renolin MR
Mobile Glygoyle
Renolin PG
Fragol TR
Fuchs Renolin B HV
Mobile DTE Excel

Most Zinc & Ash-Free Hydraulic And Lubricating Oils

Shell Tellus S3
Fuchs ZAF
Texaco Rando HD
Panolin HLP
ESSO Nuto H
Renolin BHVI
Shell Tellus S2
Shell Tellus S
Total Equivis
Megol HLP
Aral Vitam
Shell Vitrea

Modern Turbine Lubricating Oils

Texaco Rando HDZ
Mobile Terrestic
Shell Turbo T
Shell Turbo S4 X
Mobile DTE
Addinol MT
Mobile Terrestic T
Chevron GST/EP
ESSO Teresso GT
Texaco Premium Regal EP
Shell Turbo S4 GX
Shell Turbo S4
Castrol Hyspin VG
Shell Turbo CC
Shell Turbo GT

Media Comparison

As flow rate increases, the friction between the oil and filter element increases, which leads to static buildup. See how these three media types stack up in increasing flow rate scenarios:

Anti-Stat Premium entirely eliminates charging even as flow rate increases, compared to the moderate performance of Anti-Stat Media.

Electrostatic Charging: Excellement, Anti-Stat Media, Anti-Stat Premium

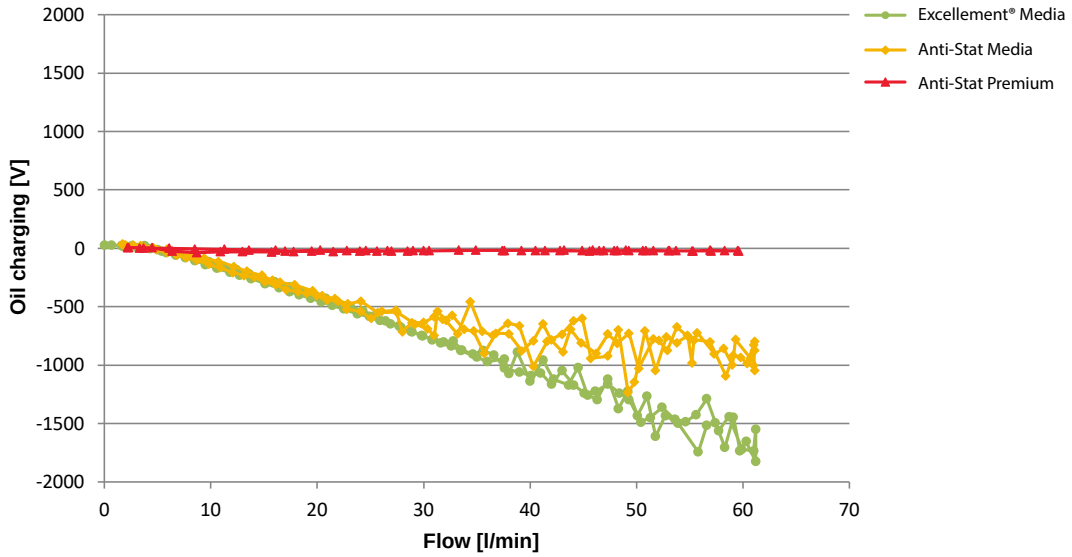

BestFit® High Performance Replacement Elements

Schroeder Industries manufactures over 2000 BestFit® performance replacement elements. In addition, Schroeder Industries produces all of the technical data to support the sale of these products. The BestFit® family consists of standard cartridge and spin-on replacements, CoreCentric® coreless elements, high collapse elements, and the melt-blown and spun-bonded process filtration elements. Most importantly, we offer the easiest way to determine the Schroeder equivalent of more than 42,000 competitive elements using the Schroeder online element search, accessible through our web site at www.schroederindustries.info.

Cross Reference Element Search Tool

Simply clicking on "BestFit® Element Cross Reference" on the Schroeder Industries home page (www.schroederindustries.com) allows you to match filter elements by entering either the manufacturer's name or part number.

There are two ways to search on the Schroeder BestFit® cross reference page. The first way is to type a competitor element part number in the search bar. When searching by competitor part number, the search will activate as soon as three characters are entered (no spaces or symbols). The second way is to use the two drop down menus to find the competitor and part number you are trying to cross. When a cross has been located, the results table includes the corresponding BestFit® replacement element, dimensions (inside diameter, outside diameter and length), element style (e.g., cartridge or spin-on), media type (metal mesh, water removal, synthetic glass, or paper) and performance specifications, including beta ratios and dirt holding capacity. Also, a link to the left of the results table links to a generalized element drawing with all of the desired information on it. If there is an element that cannot be crossed, Schroeder Industries can work with you in finding a replacement solution to your element problem!

Schroeder BestFit® Elements include the following series:

QCLZ (8314 replacement)	SBF-0160R	SBF-0660R	SBF-170B	SBF-7500	SBF-9021	SBF-MF-100
QPML (8310 replacement)	SBF-0161D	SBF-0661D	SBF-2000	SBF-7507	SBF-9100	SBF-PXX
SBF-0030D	SBF-0240D	SBF-0850R	SBF-2544	SBF-8200	SBF-9400	SBF-PXW
SBF-0030R	SBF-0240R	SBF-0950R	SBF-2600R	SBF-8300	SBF-9600	SBF-RP83
SBF-0031D	SBF-0241D	SBF-1000	SBF-270	SBF-8400	SBF-9601	SBF-TXX
SBF-0060D	SBF-0280D	SBF-1001	SBF-270B	SBF-8500	SBF-9604	SBF-TXW
SBF-0060R	SBF-0281D	SBF-1002	SBF-370	SBF-8700	SBF-9650	SBF-UE210
SBF-0661D	SBF-0330D	SBF-1010	SBF-370B	SBF-8800	SBF-9651	SBF-UE219
SBF-0110D	SBF-0330R	SBF-1050	SBF-6000	SBF-8900	SBF-9800	SBF-UE310
SBF-0110R	SBF-0331D	SBF-1051	SBF-6400	SBF-8914	SBF-9801	SBF-UE319
SBF-0111D	SBF-0500R	SBF-1300R	SBF-6500	SBF-937	SBF-9901	SBF-UE610
SBF-0160D	SBF-0660D	SBF-170	SBF-7400	SBF-9020	SBF-BPE-7509	SBF-UE619

Schroeder BestFit® element model codes are determined by replicating the element model code it is replacing. An example of a breakdown of the model code is shown below:

Schroeder BestFit® Model Code: **SBF-9600-13Z10V**

Schroeder BestFit®	Competitor Series #	Element Length	Media Type	Micron Rating	Seal Material
↓	↓	↓	↓	↓	↓
SBF	9600	13	Z	10	V

CoreCentric®

CORELESS ELEMENT WITH BACKBONE

CoreCentric® Coreless Element

The CoreCentric® Coreless element is an environmentally friendly, all plastic element (no metal parts) that can be crushed, shredded or burned. These alternative methods of disposal will not only greatly reduce solid waste volumes, but also reduce disposal costs simultaneously.

CoreCentric® Coreless elements are designed to ensure optimum performance and ease of service. Built with Excellement® Z-Media®, CoreCentric® Coreless elements (QCL) fit in all Pall 8304 and 8314 housings and are available in the 8”, 13”, 16”, and 39” lengths. Note: To ensure fast delivery, CoreCentric® elements are available with Viton® seals only.

CoreCentric® elements are designed with an integral patent design, cylindrical center core that provides column strength, added structural stability, and easy element removal. This core eliminates both the sticking and vertical sagging problems that can occur when using other manufacturer’s coreless designs.

Schroeder’s CoreCentric® elements are the only coreless element designed with backbone. We call it the “CORE ON CORE” element design.

Schroeder ORIGINAL ELEMENTS

Melt-Blown and Spun-Bonded Filter Elements For Process and Cutting Fluid Applications

Used in process and cutting fluid applications, melt-blown and spun-bonded elements are manufactured with either polypropylene or nylon filter media. Element fibers are blown onto and thermally bonded to a central support core with increasing fiber density towards the core, creating depth filtration. All layers are interlinked to offer maximum support while ensuring high void volume. The thermal bonding process minimizes media migration, providing consistent and reliable performance. They excel in dirt holding capacity and have low pressure drops. They also offer wide chemical compatibility, as well as being structurally sound and able to withstand high flow rates.

Melt-blown and spun-bonded elements fit most industrial housings incorporating the double open ended sealing arrangement, as well as standard polypropylene, PVC, and polycarbonate housings. In addition, these elements are available with end caps for most plug-in style O-ring fittings, making them ideally suited to more critical applications requiring the assurance of these double seals.

They have a wide range of applications including:

- Machine tool coolants
- Roll mill coolants
- EDM fluids
- Quench oils
- Parts washing solvents
- Electrophoretic paints
- Etching solutions
- Plating solutions
- Light oils
- Fuels
- High water containing fluids

For technical information on process filtration solutions, request catalog #L-2728.

electric DRIVE
Energy-Saving Filtration

Electric Drive Elements

The use of Schroeder's GREEN, Electric Drive (E-Drive) Media filtration technology guarantees safe and reliable equipment operation, all-while conserving the use of energy.

Part of Schroeder's Energy Saver initiative, filter elements made using the all-new E-Drive Media are characterized by a low pressure drop, making them suitable for low energy requirements compared to conventional hydraulic elements under the same ambient conditions.

In certain applications, the E-Drive Media can lower the pressure drop to a point where consumers may be able to size down their horsepower requirements on their current motor.

E-Drive filter elements are made using an all-new specialty formulated, high efficiency, low differential pressure media and are the perfect choice for use in electric hydraulic drive motor-pump units. Use them for conserving energy bills and wherever high viscosity fluids are employed – especially at low temperatures that produce a cold start behavior.

Energy Sustainability
Delivering Responsible Energy Solutions

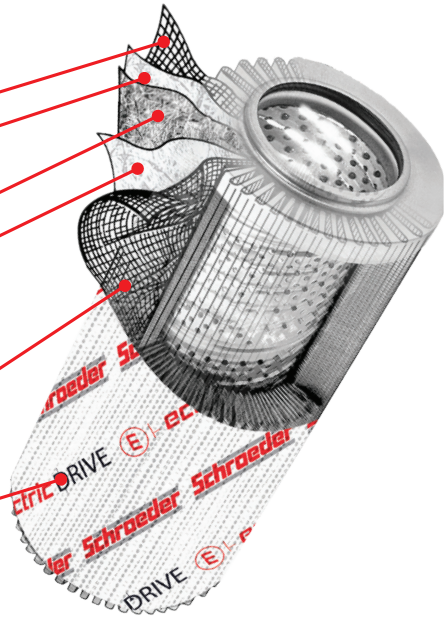

Our testing demonstrates a great comparison of a 10-micron Electric Drive media element to one with the typical synthetic microglass media that is available on the market today.

- Element Collapse Rating: 145 psid (10 bar)
- Temperature Range: -22°F to 212°F (-30°C to 100°C)
- Flow Direction: Outside to Inside

Technical Specs (evaluated in K-sized element):

Media Type	β200 [µm(c)]	Pressure Drop Factor [psid/gpm]
E-Drive Media (10 µ)	10.2	0.050
Typical Synthetic Media (10 µ)	10.6	0.156

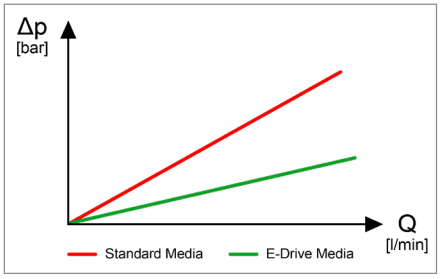

E Media Elements (Cellulose)

Recognized as one of the industry's most cost effective media available in the marketplace, Schroeder E Media is an excellent choice for a wide variety of hydraulic system applications.

The E3 media is a specially designed mixture of cellulose and micro-glass, which provides both high dirt holding capacity and high particle capture efficiency, resulting in one of the industry's most cost effective cellulose media. Schroeder E10 media, used in the popular K10 element, is a standard for numerous industries, enabling continuous, trouble-free system operation.

Please note: The "E" identification for the media is not shown in the element model number. For example, our standard K3 and K10 elements are constructed with E media.

Table 14 shows the filtration ratios for Schroeder E media elements, while Figure 18 depicts this information graphically and provides corresponding % efficiencies for both the E3 and E10 media.

Table 14. E Media Efficiency Ratings per ISO 4572 without Antistatic Additive

Element Media	Filtration Ratios (Beta)						
	$ß_x \geq 75$ (98.7%)	$ß_x \geq 100$ (99%)	$ß_x \geq 200$ (99.5%)	$ß_3$	$ß_5$	$ß_{10}$	$ß_{20}$
E3	6.8	7.5	10.0	28	48	200	>1000
E10	15.5	16.2	18.0	—	1.3	10	400

The cost effectiveness of E media becomes even more apparent when dirt holding capacity is considered (see Table 15). The dollars spent per gram of dirt retained with an E media element makes it an excellent choice for many contamination control programs.

Table 15. Typical Dirt Holding Capacities for E Media Elements (ACFTD capacity in grams)

Element Size	Media	
	E3	E10
N	8	7
NN	12	10
C	14	12
CC	30	25
A	16	13
K	54	44
9C	30	25
BB	162	132
18L	108	88
M	50	37
8Z	39	32
8T	39	32
P	—	37
9V	32	26
14V	51	41
6R	9	8

The data shown represents the cumulative results of E media multi-pass tests. Tests are conducted on a regular basis at Schroeder's own laboratory and at approved independent facilities. Tests are conducted without antistatic additive.

Figure 16. E Media Element Efficiencies Per ISO 4572

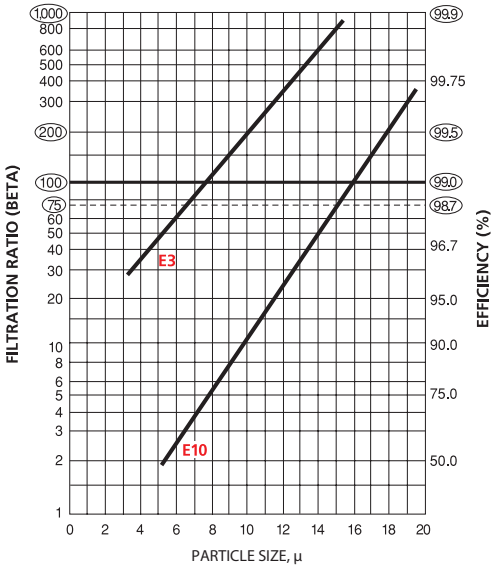

The data shown represents the cumulative results of E media multi-pass tests. Tests are conducted on a regular basis at Schroeder's own laboratory and at approved independent facilities. Tests are conducted without antistatic additive.

M Media Elements (Reusable Metal)

Schroeder offers a line of metal reusable elements to meet specific application needs. These rugged elements are constructed of high-strength woven stainless steel wire mesh. The wire mesh and center tube are epoxy-bonded to the end caps.

The element design incorporates shallow pleats which provide an efficient flow pattern with optimum pressure drop. In addition, the shallow pleat construction simplifies the cleaning process. These elements may be cleaned using a liquid solution (either Kleenite or Oakite) or by ultrasonics. Request Schroeder's #L-2094 Data Sheet for details regarding recommended cleaning procedures.

Schroeder metal elements are available in a variety of sizes for 10, 25, 60, 150, and 260 µ filtration and are shown in Table 16. The size and type of wire mesh used for each micron rating are shown in Table 17.

Table 17. Micron Ratings and Wire Mesh	
10 µ	200 x 1400 twilled Dutch weave
25 µ	165 x 1400 twilled Dutch weave
60 µ	50 x 250 plain Dutch weave
150 µ	100 x 100 square Dutch weave
260 µ	60 x 60 square Dutch weave

Figure 17. Typical Pressure Drop Performance Data for Schroeder Series M Media Elements

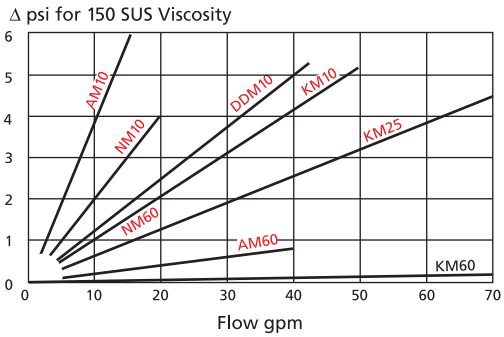

F-Pack Media

Today's demand for the use of fire-resistant fluids that assure safe and dependable operation in an electrohydraulic control system (EHC) demand peak performing media. The change-over to Schroeder "F" Pack media from a traditional, high performance, synthetic media results in lower, clean pressure drop and higher efficiency. Most importantly, the change eliminates cast-off, or shedding of synthetic fibers, which can result in servo valve failure.

Construction

- Total stainless steel, sintered depth style media
- Pleated media
- Sintered construction prevents shedding of media
- Outside/in flow

Performance

- Extremely efficient: ß3=1000 and ß10=1000
- Excellent choice for use with phosphate esters and Fyrquel® fluids
- Operating temperature -20°F to 350°F with use of Viton® seals
- Element collapse rating 3000 psid for use at high differential pressures

W Media Elements (Water Removal)

Water can cause a host of contamination problems in hydraulic and lubrication systems. It can exist in a system in a dissolved state or in a free state. In a dissolved state, the fluid is holding the water. In a free state, the water is above the specific saturation point of the fluid, and thus cannot dissolve or hold more water. A mild discoloration of the fluid generally indicates that a free water condition exists in the system.

Schroeder's uniquely designed water removal elements employ a quick-acting water-absorbent polymer, capable of holding over 400 times its own weight in water. These elements are ideal for in-line use, re-circulating filter systems, or in portable filtration carts.

Water retention is positive, even under high pressure, so there is no downstream unloading. However, water retention capacity is dependent on the type of fluid and additives present in a system, its viscosity and its flow rate. As a result, retention capacity may be diminished by some additives present in the system, by a high viscosity, or a high flow rate.

Table 18 shows water holding capacity and Table 19 shows the pressure drops for select W media elements. (On net page)

For best results, flow rates through a single KW element should be 10 gpm (38 L/min) or less.

AQUA EXCELLEMENT®

Aqua-Excellement™ High Efficiency Particulate Water Removal Media

Schroeder offers Aqua-Excellement™ filter elements, which excel at removing both water and solid particulates from petroleum-based fluids. The filtering media incorporated into Aqua-ExcellementTM elements is referred to as ZW and includes layers of Schroeder's high efficiency Excellement® Z-Media® for capturing particulate contaminations in combination with water removal capabilities. The high efficiencies, outstanding beta stabilities, and excellent dirt holding capacities that Excellement® customers have become accustomed to are present in the new ZW media. Paired together, these two types of media make a winning combination and are highly effective at filtering out water and solids simultaneously.

Aqua-Excellement™ elements are currently available in multiple sizes for both cartridge and spin on style. Equipped, with ZW media, Schroeder MFS/AMS series carts can be effectively utilized for on-site flushing applications for cleaning stagnant large volume reservoirs. When used on a kidney loop system installed on power units, the ZW media allows for smaller kidney loop system and lower dimensional clearance and weight. Other applications include mobile filtration systems and bulk transfer systems.

Schroeder Kidney Loop Systems and Mobile Filtration Carts can utilize the KZW cartridge elements ZW Spin-On Elements

ZW Spin-On Elements

NOTE: When using any K-size housing do not exceed 14 gpm

Shown below is a breakdown of the layers of the new K-size ZW cartridge element.

- Epoxy-coated steel wire fabric provides maximum support and rigidity.
- Spun-bonded scrim provides downstream media support and increased stability
- Water removal media
- Two layers of Z-Media provide maximum efficiency and dirt-holding capacity with minimal pressure drop
- Epoxy-coated steel wire fabric provides maximum support and rigidity.

Total water injection flow rate: 2.0 ml/min.

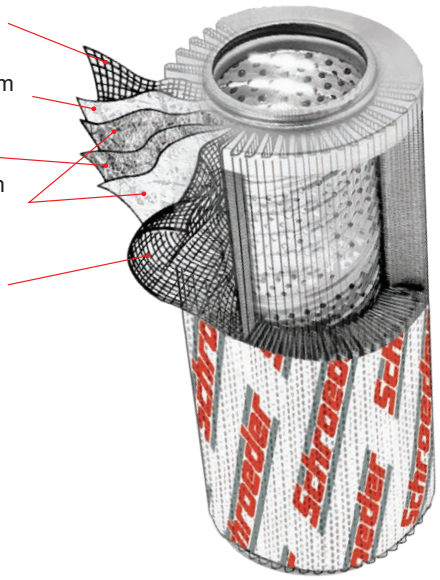

Table 18. Water Holding Capacity			
Element Model No.	Flow gpm (L/min)	Capacity	
		mL	ounces
KW	20 (75)	150	5
KW	16 (60)	200	7
KW	10 (38)	320	11
KW	2 (7.5)	500	17
6RW	20 (75)	31	1
6RW	2 (7.5)	104	4
8TW	20 (75)	93	3
8TW	2 (7.5)	311	11
9VW	20 (75)	81	3
9VW	2 (7.5)	270	9
14VW	20 (75)	130	4.4
14VW	2 (7.5)	435	14.7
16QW	60 (225)	480	16
16QW	10 (38)	1350	45
39QW	140 (530)	1100	37
39QW	22 (83)	3100	105
MW	14 (53)	100	3.5
MW	1.5 (6)	350	12

Table 19. Pressure Drop		
Element Model No.	Flow gpm (L/min)	ΔP psi (bar)
KW	20 (75)	2.5 (0.17)
14VW	20 (75)	2.5 (0.17)
16QW	65 (246)	2.5 (0.17)
39QW	150 (570)	2.5 (0.17)

Table 20. Maximum Recommended Flow Rate		
Element Model No.	Maximum Recommended Flow Rate	
	gpm	L/min
KW	20	75.7
6RW	4	16
8TW	12	47
9VW	11	41
14VW	20	75
16QW	60	225
39QW	140	530
MW	16	6

Table 21. KZW Cartridge Element Dirt and Water Holding Capacities						
Element Part Number	DHC (g)	Water Removal Capacity		Filtration Ratios (Beta)		
		2.5 gpm	10 gpm	ßx ≥ 200	ßx ≥ 1000	ΔP Factor
KZW1	61	197 mL/ 6.66 oz	134 mL/ 4.53 oz	<4.0	<4.0	0.43
KZW3/KKZW3	64/128			4.0	4.8	0.32
KZW5/KKZW5	63/126			5.1	6.4	0.28
KZW10/KKZW10	57/114			6.9	8.6	0.23
KZW25/KKZW25	79/158			15.4	18.5	0.14

Aqua-Excellement™ High Efficiency Particulate Water Removal Media

Table 22. ZW Spin-On Element Dirt and Water Holding Capacities					
Element Part Number	DHC (g)	Water Removal Capacity		Filtration Ratios (Beta)	
		2.5 gpm	10 gpm	ßx ≥ 200	ßx ≥ 1000
10MZW10	53	185 mL / 6.3 oz	126 mL / 4.3 oz	6.9	8.6

Notes Section:

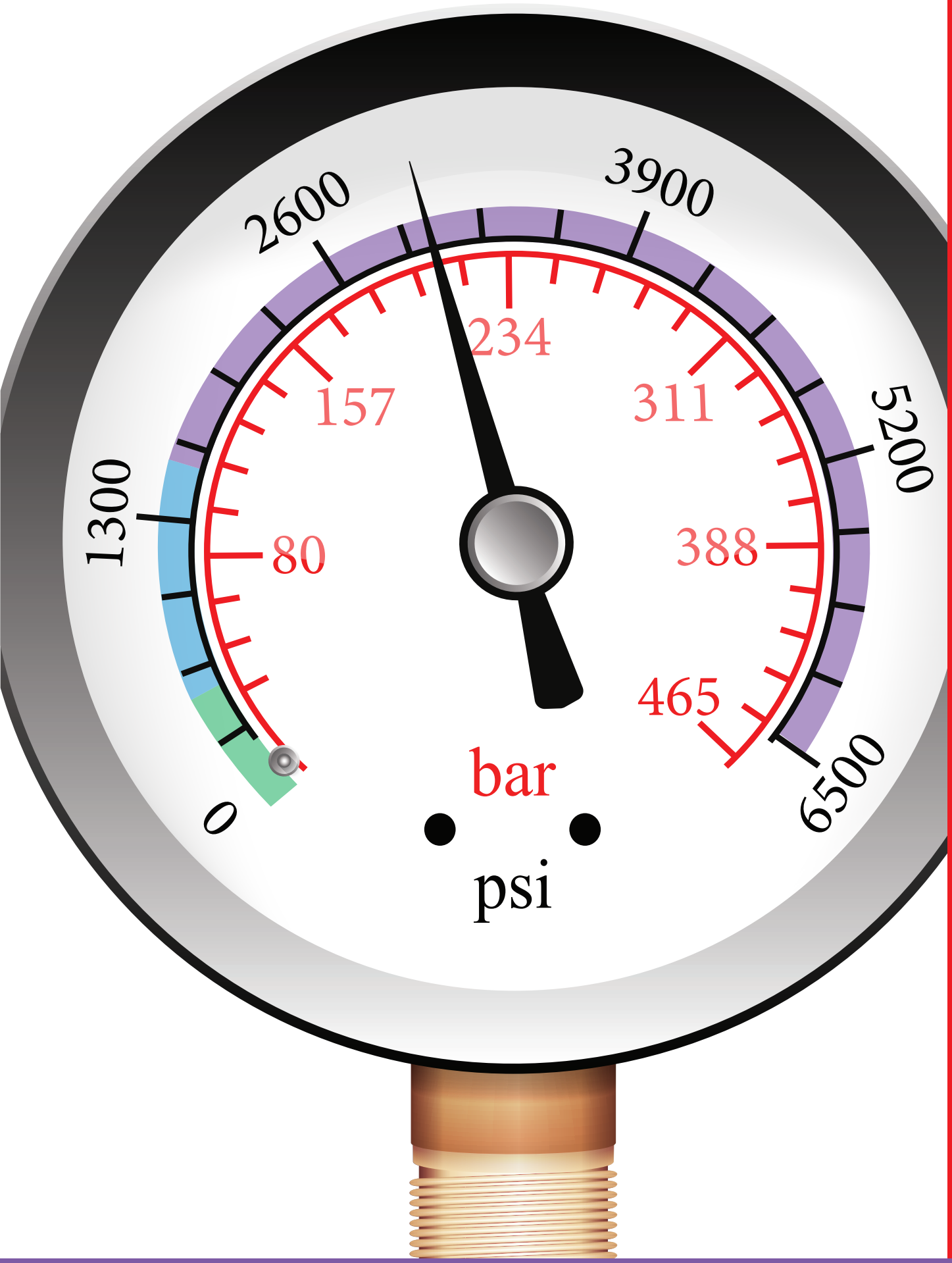

HIGH PRESSURE FILTERS

Section 3:
above 1500 psi

v.040224

Section 3 High Pressure Filters Selection Guide

High Pressure Filters (1500 - 6500 psi)

	Pressure psi (bar)	Flow gpm (L/min)	Element Length/Size	Page
Top-Ported High Pressure Filters				
NF30	3000 (210)	20 (75)	N, NN	49
NFS30	3000 (210)	20 (75)	N, NN	53
YF30	3000 (210)	25 (100)	4Y, 8Y	57
CFX30	3000 (210)	30 (115)	CC, DD	61
PLD	3000 (210)	100 (380)	DV	65
CF40	4000 (275)	45 (170)	C, CC	69
DF40	4000 (275)	30 (113)	C, CC	69
PF40	4000 (275)	50 (190)	5H, 9H	73
RFS50	5000 (345)	30 (115)	8R	77
RF60	6000 (415)	30 (115)	8R	81
CF60	6000 (415)	50 (190)	CC	85
CTF60	6000 (415)	75 (284)	5CT, 8CT, 14CT	89
VF60	6000 (415)	70 (265)	9V	93
LW60	6000 (415)	300 (1135)	39ZP	97
Base-Ported High Pressure Filters				
KF30 QUALITY PROTECTION	3000 (210)	100/150 (380/570)	K, KK, 27K	101
KF50 QUALITY PROTECTION	5000 (345)	100/150 (380/570)	K, KK, 27K	101
TF50	5000 (345)	40 (150)	A, CC	105
KC50 QUALITY PROTECTION	5000 (345)	100/150 (380/570)	K, KK, 27K	109
MKF50	5000 (345)	200 (760)	K, KK, 27K	113
MKC50	5000 (345)	200 (760)	K, KK, 27K	113
KC65 QUALITY PROTECTION	6500 (450)	100 (380)	K, KK, 27K	117
MKC65	6000 (413)	300 (1136)	K, KK, 27K	121
Hydrostatic (Bidirectional) Flow High Pressure Filters				
HS60	6000 (415)	120 (450)	13HZ	125
MHS60	6000 (415)	120 (450)	13HZ	125
KFH50 (Base-Ported)	5000 (345)	70 (265)	K, KK, 27K	129
In-Line Filters				
LC60	6000 (415)	8 (30)	SSD	133
LC35	3500 (241)	15 (57)	BS	135
LI50	5000 (345)	35 (130)	IZ	137
LC50	5000 (345)	9 (35)	5H	141
Servo Protection (Sandwich) Filters DO7, DO3, Moog, Parker & Vickers				
NOF30-05	3000 (210)	12 (45)	NN	143
NOF50-760	5000 (345)	15 (57)	SV	147
FOF60-03	6000 (415)	12 (45)	F	151
Manifold Mount Filter Kits (Bowls & Installation Drawings)				
NMF30	3000 (210)	20 (75)	NN	155
RMF60	6000 (415)	30 (115)	8R	157
Cartridge Elements for use in Manifold Applications				
14-CRZX10	3000 (210)	6 (23)	—	159
20-CRZX10	3000 (210)	12 (45)	—	160

Top-Ported Pressure Filter NF30

Model No. of filter in photograph is NF301NZ10SD5.

Features and Benefits

- Top-ported pressure filter
- All aluminum assembly
- Available with non-bypass option with high collapse element
- Offered in pipe, SAE straight thread and ISO 228 porting
- Same day shipment model available
- Available with quality protected Lock & Key Elements (NFLK30)

20 gpm
75 L/min
3000 psi
210 bar

Filter Housing Specifications

Flow Rating:	Up to 20 gpm (75 L/min) for 150 SUS (32 cSt) fluids
Max. Operating Pressure:	3000 psi (210 bar)
Min. Yield Pressure:	10,000 psi (690 bar), per NFPA T2.6.1
Rated Fatigue Pressure:	2400 psi (165 bar), per NFPA T2.6.1
Temp. Range:	-20°F to 225°F (-29°C to 107°C)
Bypass Setting:	Cracking: 40 psi (2.8 bar) Full Flow: 85 psi (5.9 bar) Non-bypassing model has a blocked bypass.
Porting Head: Element Case:	Aluminum Aluminum
Weight of NF30-1N: Weight of NF30-1NN:	3.4 lbs. (1.5 kg) 4.4 lbs. (2.0 kg)
Element Change Clearance:	4.50" (115 mm)

Fluid Compatibility

Type Fluid	Appropriate Schroeder Media
Petroleum Based Fluids	All E Media (cellulose), Z-Media® and ASP® Media (synthetic)
High Water Content	All Z-Media® and ASP® media (synthetic)
Invert Emulsions	10 and 25 µ Z-Media® and 10 µ ASP® media (synthetic)
Water Glycols	3, 5, 10 and 25 µ Z-Media® and 3, 5 and 10 µ ASP® Media (synthetic)

NF30 Top-Ported Pressure Filter

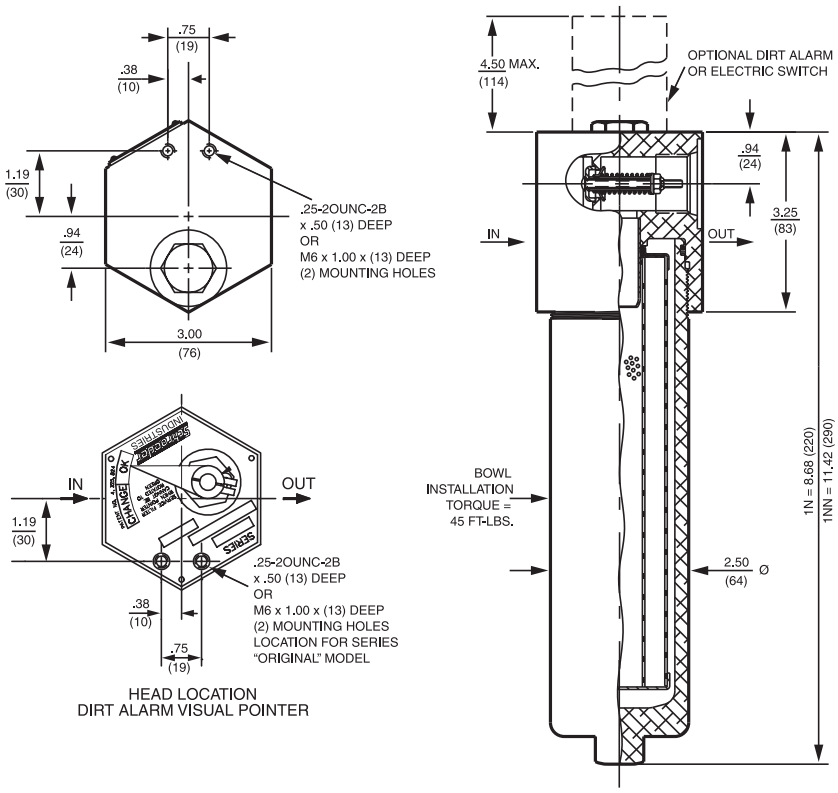

Metric dimensions in ( ).
Dimensions shown are inches (millimeters) for general information and overall envelope size only.
For complete dimensions please contact Schroeder Industries to request a certified print.

Element Performance Information & Dirt Holding Capacity

Element	Filtration Ratio Per ISO 4572/NFPA T3.10.8.8 Using automated particle counter (APC) calibrated per ISO 4402			Filtration Ratio per ISO 16889 Using APC calibrated per ISO 11171	
	$ß_x \geq 75$	$ß_x \geq 100$	$ß_x \geq 200$	$ß_x(c) \geq 200$	$ß_x(c) \geq 1000$
NZ1 / NNZ1 / NLKZ1 / NNLKZ1	<1.0	<1.0	<1.0	<4.0	4.2
NZ3 / NNZ3 / NLKZ3 / NNLKZ3	<1.0	<1.0	<2.0	<4.0	4.8
NZ5 / NNZ5 / NLKZ5 / NNLKZ5	2.5	3.0	4.0	4.8	6.3
NZ10 / NNZ10 / NLKZ10 / NNLKZ10	7.4	8.2	10.0	8.0	10.0
NZ25 / NNZ25 / NLKZ25 / NNLKZ25	18.0	20.0	22.5	19.0	24.0
NNZX3	<1.0	<1.0	<2.0	4.7	5.8
NNZX10	7.4	8.2	10.0	8.0	9.8

Dirt Holding Capacity

Element	DHC (gm)	Element	DHC (gm)
NZ1 / NLKZ1	12	NNZ3 / NNLKZ3	16
NZ3 / NLKZ3	12	NNZ5 / NNLKZ5	18
NZ5 / NLKZ5	12	NNZ10 / NNLKZ10	15
NZ10 / NLKZ10	11	NNZ25 / NNLKZ25	15
NZ25 / NLKZ5	11	NNZX3	11*
NNZ1 / NNLKZ1	15	NNZX10	13*

* Based on 100 psi terminal pressure

Element Collapse Rating: 150 psid (10 bar) for standard elements
3000 psid (210 bar) for high collapse (ZX) versions

Flow Direction: Outside In

Element Nominal Dimensions: N: 1.75" (45 mm) O.D. x 5.25" (135 mm) long
NN: 1.75" (45 mm) O.D. x 8.0" (200 mm) long

Pressure Drop Information

Based on Flow Rate and Viscosity

$\Delta P_{housing}$

NF30 $\Delta P_{housing}$ for fluids with sp gr (specific gravity) = 0.86:

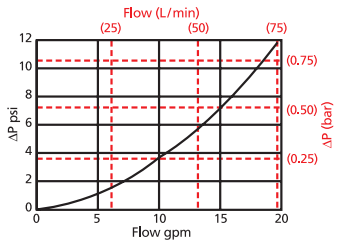

$\Delta P_{element}$

1NZ / NLKZ

Element Pressure Drop versus Flow Rate at 32 cSt (150 SUS)

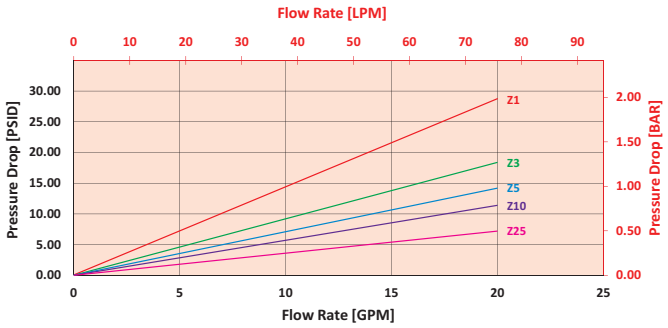

1NNZ / NNLKZ

Element Pressure Drop versus Flow Rate at 32 cSt (150 SUS)

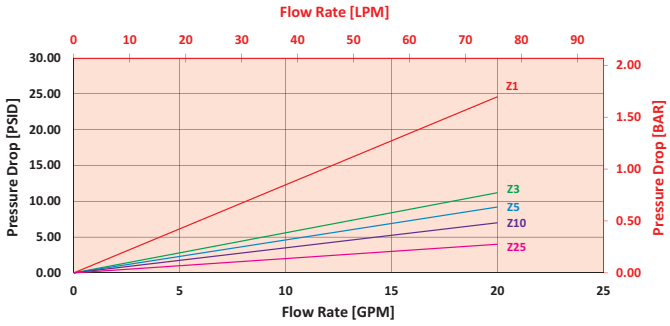

$$\Delta P_{filter} = \Delta P_{housing} + (\Delta P_{element} * V_f)$$

Exercise:

Determine ΔP_{filter} at 15 gpm (57 L/min) for NF301NZ10SD5 using 160 SUS (34 cSt) fluid.

Use the housing pressure curve to determine $\Delta P_{housing}$ at 15 gpm. In this case, $\Delta P_{housing}$ is 7 psi (.48 bar) according to the graph for an NF30 housing.

Use the element pressure curve to determine $\Delta P_{element}$ at 15 gpm. In this, case, $\Delta P_{element}$ is 8 psi (.55 bar) according to the graph for an NZ10 element.

Because the viscosity in this sample is 160 SUS (34 cSt), we determine the Viscosity Factor (V_f) by dividing the Operating Fluid Viscosity with the Standard Viscosity of 150 SUS (32 cSt). To best determine your Operating Fluid Viscosity, please reference the chart in Appendix D.

Finally, the overall filter pressure differential, ΔP_{filter}, is calculated by adding $\Delta P_{housing}$ with the true element pressure differential, ($\Delta P_{element} * V_f$). The $\Delta P_{element}$ from the graph has to be multiplied by the viscosity factor to get the true pressure differential across the element.

Solution:

$\Delta P_{housing}$ = 7 psi [0.48 bar] | $\Delta P_{element}$ = 8 psi [0.55 bar]

V_f = 160 SUS (34 cSt) / 150 SUS (32 cSt) = 1.1

ΔP_{filter} = 7 psi + (8 psi * 1.1) = 15.8 psi

OR

ΔP_{filter} = .48 bar + (.55 bar * 1.1) = 1.1 bar

Note:
If your element is not graphed, use the following equation:
$\Delta P_{element}$ = Flow Rate x $\Delta P_{f.}$ Plug this variable into the overall pressure drop equation.

Ele.	ΔP
N3	1.10
N10	0.17
N25	0.10
NAS3	0.92
NAS5	0.71
NAS10	0.57

NF30 Top-Ported Pressure Filter

Filter Model Number Selection

BOX 1	BOX 2	BOX 3	BOX 4	BOX 5	BOX 6	BOX 7	BOX 8	BOX 9
NF30 –	–	–	–	–	–	–	–	–

BOX 1	BOX 2	BOX 3	BOX 4	BOX 5	BOX 6	BOX 7	BOX 8	BOX 9	
NF30 –	1N –	Z –	10 –	–	S –	–	D5 –	–	= NF301NZ10SD5

BOX 1

Filter Series
NF30
NFN30 (Non-bypassing: requires ZX high collapse elements)
NFLK30

BOX 2

Number & Size of Elements	
1	N = Single Length
	NN = Double Length
1	NLK = Single Length Lock & Key
	NNLK = Double Length Lock & Key

BOX 3

Media Type	
Omit	= E Media (Cellulose)
Z	= Excellement® Z-Media® (synthetic)
AS	= Anti-Stat Media (synthetic)
ZX	= Excellement® Z-Media® (high collapse center tube; NN size only)
M	= Media (reusable metal mesh) N size only

BOX 4

Micron Rating	
1 = 1 Micron	(Z, ZX media)
3 = 3 Micron	(AS,E, Z, ZX media)
5 = 5 Micron	(AS, Z, ZX media)
10 = 10 Micron	(AS,E,M, Z, ZX media)
25 = 25 Micron	(E, Z, ZX media)
60 = 60 Micron	(M media)

BOX 5

Seal Material
Omit = Buna N
V = Viton®
W = Buna N, Anodized Aluminum parts

BOX 6

Porting
B = ISO228 G-¾"
P = ¾" NPTF
S = SAE-12

BOX 7

Bypass
Omit = 40 PSI bypass
50 = 50 PSI Bypass
X = Blocked bypass
(omit box 7 when NFN30 is selected)

BOX 8

Dirt Alarm® Options		
	Omit =	None
Visual	D =	Pointer
	D5 =	Visual pop-up
Visual with Thermal Lockout	D8 =	Visual w/ thermal lockout
Electrical	MS5 =	Electrical w/ 12 in. 18 gauge 4-conductor cable
	MS5LC =	Low current MS5
	MS10 =	Electrical w/ DIN connector (male end only)
	MS10LC =	Low current MS10
	MS11 =	Electrical w/ 12 ft. 4-conductor wire
	MS12 =	Electrical w/ 5 pin Brad Harrison connector (male end only)
	MS12LC =	Low current MS12
	MS16 =	Electrical w/ weather-packed sealed connector
	MS16LC =	Low current MS16
	MS17LC =	Electrical w/ 4 pin Brad Harrison male connector
Electrical with Thermal Lockout	MS5T =	MS5 (see above) w/ thermal lockout
	MS5LCT =	Low current MS5T
	MS10T =	MS10 (see above) w/ thermal lockout
	MS10LCT =	Low current MS10T
	MS12T =	MS12 (see above) w/ thermal lockout
	MS12LCT =	Low current MS12T
	MS16T =	MS16 (see above) w/ thermal lockout
	MS16LCT =	Low current MS16T
	MS17LCT =	Low current MS17T
Electrical Visual	MS13DC =	Supplied w/ threaded connector & light
	MS14DC =	Supplied w/ 5 pin Brad Harrison connector & light (male end)
Electrical Visual with Thermal Lockout	MS13DCT =	MS13 (see above), direct current, w/ thermal lockout
	MS13DCLCT =	Low current MS13DCT
	MS14DCT =	MS14 (see above), direct current, w/ thermal lockout
	MS14DCLCT =	Low current MS14DCT

BOX 9

Additional Options
Omit = None
G792 = 7/16"-20 UNF drain on housing

NOTES:

Box 2. Replacement element part numbers are identical to contents of Boxes 2, 3, 4 and 5.

Box 5. E media (cellulose) elements are only available with Buna N seals. For options V and W, all aluminum parts are anodized.
Viton® is a registered trademark of DuPont Dow Elastomers.

Box 7. When X is paired with a standard filter series, a standard bushing and spring plate will be used.

Manifold Mounted Pressure Filter NFS30

Model No. of filter in photograph is NFS301NZ3OD5.

Features and Benefits

- Manifold mounted pressure filter
- Offered in square head conventional subplate porting
- Direct mounting to inlet port on customer's manifold

20 gpm
75 L/min
3000 psi
210 bar

Filter Housing Specifications

Flow Rating:	Up to 20 gpm (75 L/min) for 150 SUS (32 cSt) fluids
Max. Operating Pressure:	3000 psi (210 bar)
Min. Yield Pressure:	10,000 psi (690 bar), per NFPA T2.6.1
Rated Fatigue Pressure:	2400 psi (165 bar), per NFPA T2.6.1
Temp. Range:	-20°F to 225°F (-29°C to 107°C)
Bypass Setting:	Cracking: 40 psi (2.8 bar) Full Flow: 85 psi (5.9 bar)
Porting Head: Element Case:	Aluminum Aluminum
Weight of NFS30-1N: Weight of NFS30-1NN:	3.6 lbs. (1.6 kg) 4.3 lbs. (2.0 kg)
Element Change Clearance:	4.50" (115 mm)

Fluid Compatibility

Type Fluid	Appropriate Schroeder Media
Petroleum Based Fluids	All E Media (cellulose), Z-Media® and ASP® Media (synthetic)
High Water Content	All Z-Media® and ASP® media (synthetic)
Invert Emulsions	10 and 25 µ Z-Media® and 10 µ ASP® media (synthetic)
Water Glycols	3, 5, 10 and 25 µ Z-Media® and 3, 5 and 10 µ ASP® Media (synthetic)

Manifold Mounted Pressure Filter

NFS30 WITH "O" PORT CONFIGURATION

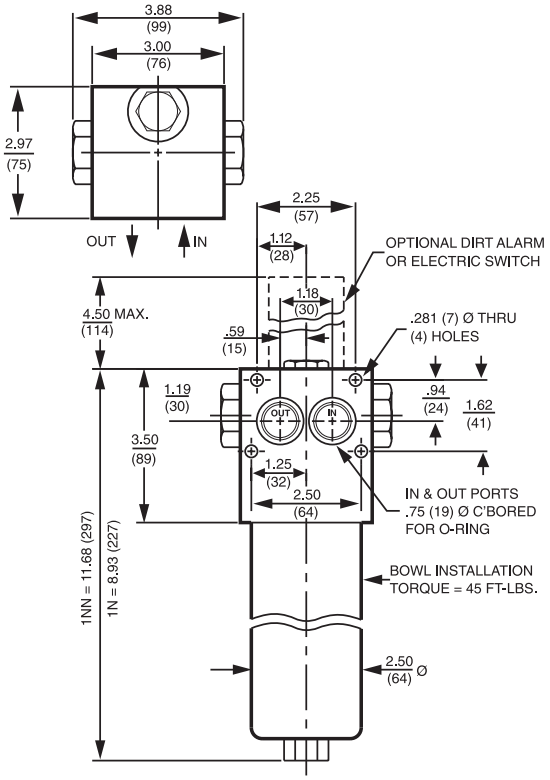

NFS30 WITH PO, SO, FO PORT CONFIGURATIC

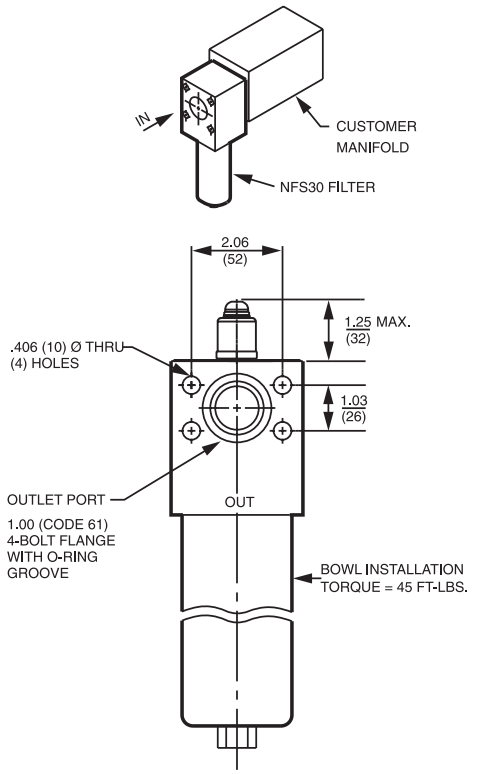

Metric dimensions in ( ).
Dimensions shown are inches (millimeters) for general information and overall envelope size only.
For complete dimensions please contact Schroeder Industries to request a certified print.

Element Performance Information & Dirt Holding Capacity

	Filtration Ratio Per ISO 4572/NFPA T3.10.8.8 Using automated particle counter (APC) calibrated per ISO 4402			Filtration Ratio per ISO 16889 Using APC calibrated per ISO 11171	
Element	$ß_x \geq 75$	$ß_x \geq 100$	$ß_x \geq 200$	$ß_x(c) \geq 200$	$ß_x(c) \geq 1000$
NZ1/NNZ1	<1.0	<1.0	<1.0	<4.0	4.2
NZ3/NNZ3	<1.0	<1.0	<2.0	<4.0	4.8
NZ5/NNZ5	2.5	3.0	4.0	4.8	6.3
NZ10/NNZ10	7.4	8.2	10.0	8.0	10.0
NZ25/NNZ25	18.0	20.0	22.5	19.0	24.0

Element	DHC (gm)	Element	DHC (gm)
NZ1	12	NNZ1	15
NZ3	12	NNZ3	16
NZ5	12	NNZ5	18
NZ10	11	NNZ10	15
NZ25	11	NNZ25	15

Element Collapse Rating: 150 psid (10 bar) for standard elements
3000 psid (210 bar) for high collapse (ZX) versions

Flow Direction: Outside In

Element Nominal Dimensions: N: 1.75" (45 mm) O.D. x 5.25" (135 mm) long
NN: 1.75" (45 mm) O.D. x 8.0" (200 mm) long

Pressure Drop Information

Based on Flow Rate and Viscosity

$\Delta P_{housing}$

NFS30 $\Delta P_{housing}$ for fluids with sp gr (specific gravity) = 0.86:

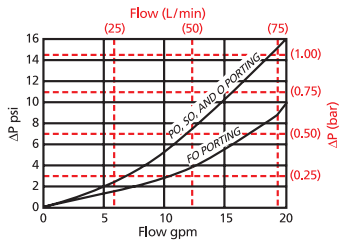

$\Delta P_{element}$

NZ

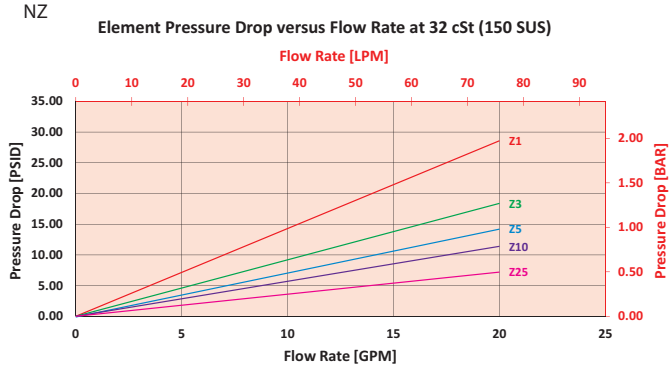

NNZ

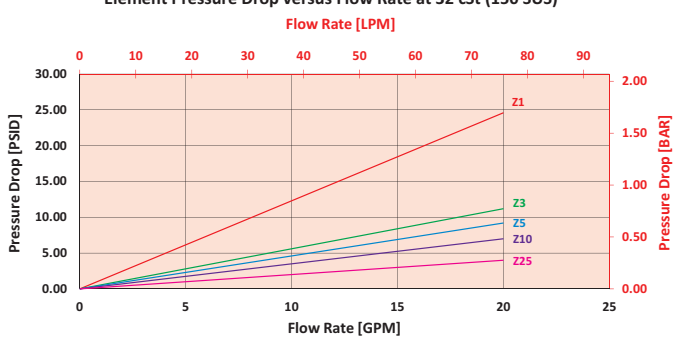

$$\Delta P_{filter} = \Delta P_{housing} + (\Delta P_{element} * V_f)$$

Exercise:

Determine ΔP_{filter} at 15 gpm (57 L/min) for NFS301NZ10SO using 175 SUS (37.2 cSt) fluid.

Use the housing pressure curve to determine $\Delta P_{housing}$ at 15 gpm. In this case, $\Delta P_{housing}$ is 10 psi (.69 bar) on the graph for the NFS30 housing.

Use the element pressure curve to determine $\Delta P_{element}$ at 15 gpm. In this case, $\Delta P_{element}$ is 8 psi (.55 bar) according to the graph for the NZ10 element.

Because the viscosity in this sample is 175 SUS (37.2 cSt), we determine the Viscosity Factor (V_f) by dividing the Operating Fluid Viscosity with the Standard Viscosity of 150 SUS (32 cSt). To best determine your Operating Fluid Viscosity, please reference the chart in Appendix D.

Finally, the overall filter pressure differential, ΔP_{filter}, is calculated by adding $\Delta P_{housing}$ with the true element pressure differential, ($\Delta P_{element} * V_f$). The $\Delta P_{element}$ from the graph has to be multiplied by the viscosity factor to get the true pressure differential across the element.

Solution:

$\Delta P_{housing}$ = 10 psi [.69 bar] | $\Delta P_{element}$ = 8 psi [.55 bar]

V_f = 175 SUS (37.2 cSt) / 150 SUS (32 cSt) = 1.2

ΔP_{filter} = 10 psi + (8 psi * 1.2) = 19.6 psi

OR

ΔP_{filter} = .69 bar + (.55 bar * 1.2) = 1.35 bar

Note:
If your element is not graphed, use the following equation:
$\Delta P_{element}$ = Flow Rate x $\Delta P_{f.}$ Plug this variable into the overall pressure drop equation.

Ele.	ΔP	Ele.	ΔP
N3	1.10	NN3	0.77
N10	0.17	NN10	0.13
N25	0.10	NN25	0.07
NAS3	0.92	NNAS3	0.56
NAS5	0.71	NNAS5	0.46
NAS10	0.57	NNAS10	0.35

NFS30 Manifold Mounted Pressure Filter

Filter Model Number Selection

BOX 1	BOX 2	BOX 3	BOX 4	BOX 5	BOX 6	BOX 7	BOX 8
NFS30 –	–	–	–	–	–	–	–

BOX 1	BOX 2	BOX 3	BOX 4	BOX 5	BOX 6	BOX 7	BOX 8	
NFS30 –	1N –	Z –	10 –	–	SO –	–	D	= NFS301NZ10SOD

BOX 1

Filter Series
NFS30
NFSN30 (Non-bypassing: requires ZX high collapse elements)

BOX 2

Number & Size of Elements	
1	N = Single Length
	NN = Double Length

BOX 3

Media Type	
Omit	= E Media (Cellulose)
Z	= Excellement® Z-Media® (synthetic)
AS	= Anti-Stat Media (synthetic)
ZX	= Excellement® Z-Media® (high collapse center tube)
M	= Media (reusable metal mesh) N size only

BOX 4

Micron Rating	
1 = 1 Micron	(Z, ZX media)
3 = 3 Micron	(AS,E, Z, ZX media)
5 = 5 Micron	(AS, Z, ZX media)
10 = 10 Micron	(AS,E,M, Z, ZX media)
25 = 25 Micron	(E, Z, ZX media)
60 = 60 Micron	(M media)

BOX 5

Seal Material	
Omit	= Buna N
V	= Viton®
W	= Buna N, Anodized Aluminum parts

BOX 6

Porting	
SO	= SAE-12
PO	= 3/4" NPTF
FO	= 1" SAE 4-bolt flange Code 61
O	= Manifold

BOX 7

Bypass	
Omit	= 40 PSI Bypass
50	= 50 PSI Bypass
X	= Blocked bypass

(Omit box 7 if NFSN30 is used)

BOX 8

Dirt Alarm® Options		
	Omit =	None
Visual	D =	Pointer
	D5 =	Visual pop-up
Visual with Thermal Lockout	D8 =	Visual w/ thermal lockout
Electrical	MS5 =	Electrical w/ 12 in. 18 gauge 4-conductor cable
	MS5LC =	Low current MS5
	MS10 =	Electrical w/ DIN connector (male end only)
	MS10LC =	Low current MS10
	MS11 =	Electrical w/ 12 ft. 4-conductor wire
	MS12 =	Electrical w/ 5 pin Brad Harrison connector (male end only)
	MS12LC =	Low current MS12
	MS16 =	Electrical w/ weather-packed sealed connector
	MS16LC =	Low current MS16
	MS17LC =	Electrical w/ 4 pin Brad Harrison male connector
Electrical with Thermal Lockout	MS5T =	MS5 (see above) w/ thermal lockout
	MS5LCT =	Low current MS5T
	MS10T =	MS10 (see above) w/ thermal lockout
	MS10LCT =	Low current MS10T
	MS12T =	MS12 (see above) w/ thermal lockout
	MS12LCT =	Low current MS12T
	MS16T =	MS16 (see above) w/ thermal lockout
	MS16LCT =	Low current MS16T
	MS17LCT =	Low current MS17T
Electrical Visual	MS13 =	Supplied w/ threaded connector & light
	MS14 =	Supplied w/ 5 pin Brad Harrison connector & light (male end)
Electrical Visual with Thermal Lockout	MS13DCT =	MS13 (see above), direct current, w/ thermal lockout
	MS13DCLCT =	Low current MS13DCT
	MS14DCT =	MS14 (see above), direct current, w/ thermal lockout
	MS14DCLCT =	Low current MS14DCT

NOTES:

Box 2. Replacement element part numbers are identical to contents of Boxes 2, 3, 4 and 5.

Box 5. E media (cellulose) elements are only available with Buna N seals. For options V and W, all aluminum parts are anodized.
Viton® is a registered trademark of DuPont Dow Elastomers.

Box 6. For option O, O-rings included; fastening hardware not included.

box 7. When X is paired with a standard filter series, a standard bushing and spring plate will be used.

Box 8. For options SO, PO and FO, available dirt alarm is D only.

Top-Ported Pressure Filter YF30

Model No. of filter in photograph is YF308YZ10SD5.

Features and Benefits

- Top-ported pressure filter
- All aluminum assembly
- Meets HF2 automotive standards
- Offered in straight thread porting
- Optional drain plug in bowl for easy servicing
- Available with non-bypass option

25 gpm
100 L/min
3000 psi
210 bar

Filter Housing Specifications

Flow Rating:	Up to 25 gpm (100 L/min) for 150 SUS (32 cSt) fluids
Max. Operating Pressure:	3000 psi (210 bar)
Min. Yield Pressure:	10,000 psi (690 bar), per NFPA T2.6.1
Rated Fatigue Pressure:	1800 psi (124 bar), per NFPA T2.6.1-2005
Temp. Range:	-20°F to 225°F (-29°C to 107°C)
Bypass Setting:	Cracking: 50 psi (3.4 bar) Non-bypassing model has a blocked bypass.
Porting Head: Element Case:	Aluminum Aluminum
Weight of YF30-4Y: Weight of YF30-8Y:	3.75 lbs. (1.70 kg) 4.25 lbs. (1.93 kg)
Element Change Clearance:	4.50" (115 mm)

Fluid Compatibility

Type Fluid	Appropriate Schroeder Media
Petroleum Based Fluids	All E Media (cellulose) and Z-Media® (synthetic)
High Water Content	All Z-Media® (synthetic)
Invert Emulsions	10 and 25 µ Z-Media® (synthetic)
Water Glycols	3, 5, 10 and 25 µ Z-Media® (synthetic)

YF30 Top-Ported Pressure Filter

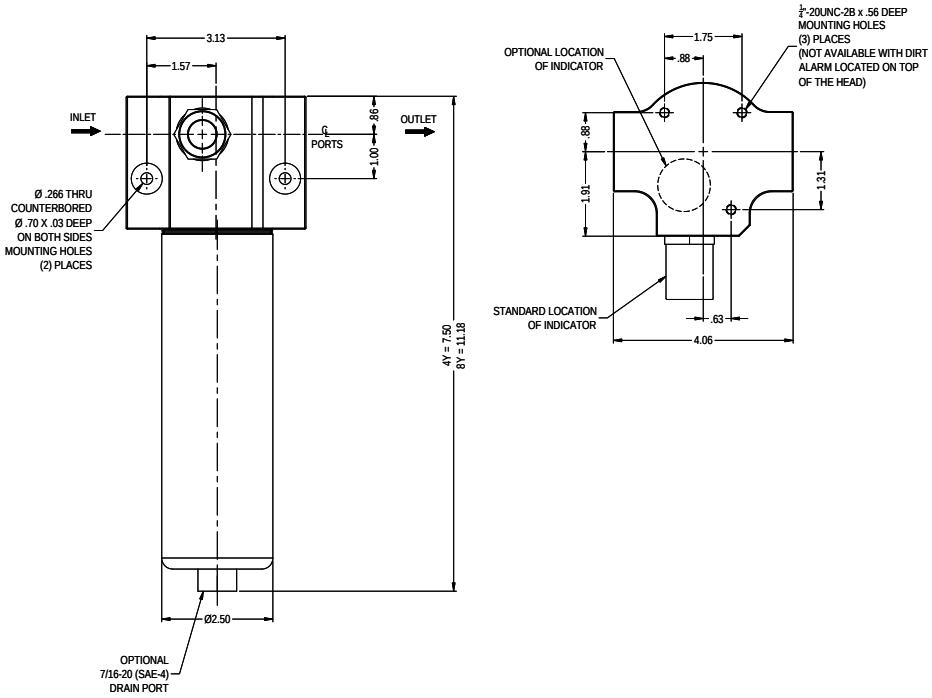

NOTES:
1.) BOWL INSTALLATION TORQUE = 45 FT/LBS.

Metric dimensions in ( ).
Dimensions shown are inches (millimeters) for general information and overall envelope size only.
For complete dimensions please contact Schroeder Industries to request a certified print.

	Filtration Ratio Per ISO 4572/NFPA T3.10.8.8 Using automated particle counter (APC) calibrated per ISO 4402			Filtration Ratio per ISO 16889 Using APC calibrated per ISO 11171	
Element	$ß_x \geq 75$	$ß_x \geq 100$	$ß_x \geq 200$	$ß_x(c) \geq 200$	$ß_x(c) \geq 1000$
4YZ1/8YZ1	<1.0	<1.0	<1.0	<4.0	4.2
4YZ3/8YZ3	<1.0	<1.0	<2.0	<4.0	4.8
4YZ5/8YZ5	2.5	3.0	4.0	4.8	6.3
4YZ10/8YZ10	7.4	8.2	10.0	8.0	10.0
4YZ25/8YZ25	18.0	20.0	22.5	19.0	24.0
4YZX5/8YZX5	2.5	3.0	4.0	5.6	7.2
4YZX10/8YZX10	7.4	8.2	10.0	8.0	9.8

Element	DHC (gm)	Element	DHC (gm)
4YZ1	6.3	8YZ1	12.1
4YZ3	5.1	8YZ3	9.9
4YZ5	6.4	8YZ5	12.4
4YZ10	5.4	8YZ10	10.5
4YZ25	4.9	8YZ25	9.4
4YZX5	4.3	8YZX5	8.9
4YZX10	4.3	8YZX10	8.9

Element Collapse Rating: 150 psid (10 bar) for standard elements
3000 psid (210 bar) for high collapse (ZX) versions

Flow Direction: Outside In

Element Nominal Dimensions: 4Y: 1.77" (45 mm) O.D. x 4.50" (114 mm) long
8Y: 1.77" (45 mm) O.D. x 8.21" (209 mm) long

Pressure Drop Information

Based on Flow Rate and Viscosity

$\Delta P_{housing}$

YF30 $\Delta P_{housing}$ for fluids with sp gr (specific gravity) = 0.86:

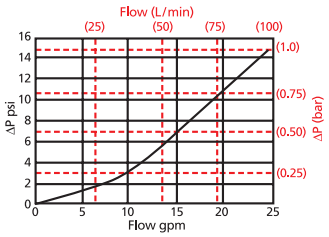

$\Delta P_{element}$

4YZ

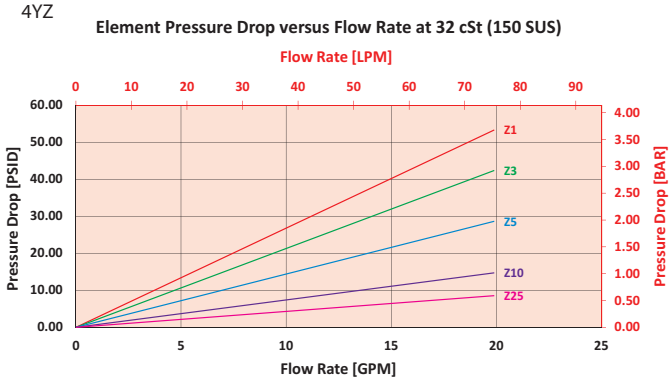

8YZ

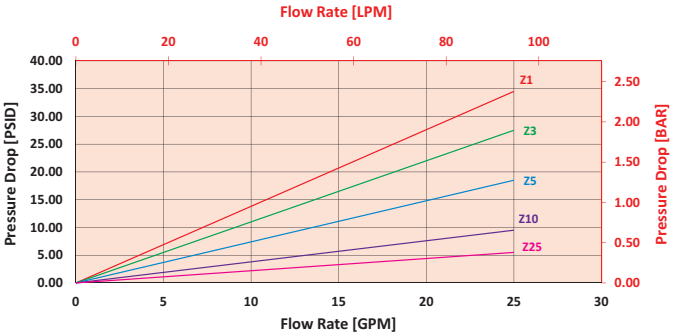

$$\Delta P_{filter} = \Delta P_{housing} + (\Delta P_{element} * V_f)$$

Exercise:

Determine ΔP_{filter} at 10 gpm (37.9 L/min) for YF304YZ10WSDRD5 using 200 SUS (42.6 cSt) fluid.

Use the housing pressure curve to determine $\Delta P_{housing}$ at 10 gpm. In this case, $\Delta P_{housing}$ is 3 psi (.21 bar) on the graph for the YF30 housing.

Use the element pressure curve to determine $\Delta P_{element}$ at 10 gpm. In this case, $\Delta P_{element}$ is 8 psi (.55 bar) according to the graph for the 4YZ10 element.

Because the viscosity in this sample is 200 SUS (42.6 cSt), we determine the Viscosity Factor (V_f) by dividing the Operating Fluid Viscosity with the Standard Viscosity of 150 SUS (32 cSt). To best determine your Operating Fluid Viscosity, please reference the chart in Appendix D.

Finally, the overall filter pressure differential, ΔP_{filter}, is calculated by adding $\Delta P_{housing}$ with the true element pressure differential, ($\Delta P_{element}$*V_f). The $\Delta P_{element}$ from the graph has to be multiplied by the viscosity factor to get the true pressure differential across the element.

Solution:

$\Delta P_{housing}$ = 3 psi [.21 bar] | $\Delta P_{element}$ = 8 psi [.55 bar]

V_f = 200 SUS (42.6 cSt) / 150 SUS (32 cSt) = 1.3

ΔP_{filter} = 3 psi + (8 psi * 1.3) = 13.4 psi

OR

ΔP_{filter} = .21 bar + (.55 bar * 1.3) = .93 bar

Note:
If your element is not graphed, use the following equation:
$\Delta P_{element}$ = Flow Rate x $\Delta P_{f.}$ Plug this variable into the overall pressure drop equation.

Ele.	ΔP	Ele.	ΔP
4YZX5	1.65	8YZX5	0.92
4YZX10	0.09	8YZX10	0.63

YF30 Top-ported Pressure Filter

Filter Model Number Selection

How to Build a Valid Model Number for a Schroeder YF30:

BOX 1	BOX 2	BOX 3	BOX 4	BOX 5	BOX 6	BOX 7	BOX 8
YF30 –	–	–	–	–	–	–	–

BOX 1	BOX 2	BOX 3	BOX 4	BOX 5	BOX 6	BOX 7	BOX 8	
YF30 –	4 –	YZ10 –	W –	S –	–	DR –	D5	= YF304YZ10WSDRD5

BOX 1 — Filter Series

YF30	
YFN30	(Non-by-passing: requires ZX high collapse elements)

BOX 2 — Element Length (in)

4
8

BOX 3 — Element Size and Media

YZ1	= Y size 1 µ Excellement® Z-Media® (synthetic)
YZ3	= Y size 3 µ Excellement® Z-Media® (synthetic)
YZ5	= Y size 5 µ Excellement® Z-Media® (synthetic)
YZ10	= Y size 10 µ Excellement® Z-Media® (synthetic)
YZ25	= Y size 25 µ Excellement® Z-Media® (synthetic)
YZX5	= Y size 5 µ Excellement® Z-Media® (high collapse center tube)
YZX10	= Y size 10 µ Excellement® Z-Media® (high collapse center tube)

BOX 4 — Seal Material

Omit	= Buna N
V	= Viton®
W	= Buna N, Anodized Aluminum parts

BOX 5 — Inlet Port

S	= SAE-12
O	= Subplate (contact factory)

BOX 6 — Dirt Alarm® Location

Omit =	Side of filter head
T =	Top of filter head

BOX 7 — Optional Bowl Drain

Omit =	No drain
DR =	Drain

BOX 8 — Dirt Alarm® Options

	Omit =	None
Visual	D5 =	Visual pop-up
Visual with Thermal Lockout	D8 =	Visual w/ thermal lockout
Electrical	MS5 =	Electrical w/ 12 in. 18 gauge 4-conductor cable
	MS5LC =	Low current MS5
	MS10 =	Electrical w/ DIN connector (male end only)
	MS10LC =	Low current MS10
	MS11 =	Electrical w/ 12 ft. 4-conductor wire
	MS12 =	Electrical w/ 5 pin Brad Harrison connector (male end only)
	MS12LC =	Low current MS12
	MS16 =	Electrical w/ weather-packed sealed connector
	MS16LC =	Low current MS16
	MS17LC =	Electrical w/ 4 pin Brad Harrison male connector
Electrical with Thermal Lockout	MS5T =	MS5 (see above) w/ thermal lockout
	MS5LCT =	Low current MS5T
	MS10T =	MS10 (see above) w/ thermal lockout
	MS10LCT =	Low current MS10T
	MS12T =	MS12 (see above) w/ thermal lockout
	MS12LCT =	Low current MS12T
	MS16T =	MS16 (see above) w/ thermal lockout
	MS16LCT =	Low current MS16T
	MS17LCT =	Low current MS17T
Electrical Visual	MS13DC =	Supplied w/ threaded connector & light
	MS14DC =	Supplied w/ 5 pin Brad Harrison connector & light (male end)
Electrical Visual with Thermal Lockout	MS13DCT =	MS13 (see above), direct current, w/ thermal lockout
	MS13DCLCT =	Low current MS13DCT
	MS14DCT =	MS14 (see above), direct current, w/ thermal lockout
	MS14DCLCT =	Low current MS14DCT

NOTES:

Box 2. Replacement element part numbers are combination of Boxes 2,3, and 4. Example 4YZ10V

Box 4. For options V and W, all aluminum parts are anodized. Viton® is a registered trademark of DuPont Dow Elastomers.

Box 8. Standard indicator setting for non-bypassing model is 50 psi unless otherwise specified.

Non-Bypassing Pressure Filter CFX30

Features and Benefits

- Top-ported non-bypassing pressure filter
- Unique valve eliminates need for high collapse elements, valve begins to close off flow at 50 psi: Differential Pressure and fully closes off flow by 80 psi: DP. This ensures that no un-filtered flow is allowed down stream to critical components.
- Offered in pipe, SAE straight thread and ISO 228 porting
- Integral inlet and outlet female test points option available

30 gpm
115 L/min
3000 psi
210 bar

Model No. of filter in photograph is CFX301CC10SD5.

Filter Housing Specifications

Flow Rating:	Up to 30 gpm (115 L/min) for 150 SUS (32 cSt) fluids
Max. Operating Pressure:	3000 psi (210 bar)
Min. Yield Pressure:	12,000 psi (828 bar), per NFPA T2.6.1
Rated Fatigue Pressure:	1800 psi (125 bar), per NFPA T2.6.1-2005
Temp. Range:	-20°F to 225°F (-29°C to 107°C)
Bypass Setting:	Non-Bypassing
Porting Head: Element Case:	Aluminum Steel
Weight of CFX30-1CC:	19.5 lbs. (8.9 kg)
Element Change Clearance:	4.00" (100 mm)

Fluid Compatibility

Type Fluid	Appropriate Schroeder Media
Petroleum Based Fluids	All E Media (cellulose), Z-Media® and ASP® Media (synthetic)
High Water Content	All Z-Media® and ASP® media (synthetic)
Invert Emulsions	10 and 25 µ Z-Media® and 10 µ ASP® media (synthetic)
Water Glycols	3, 5, 10 and 25 µ Z-Media® and 3, 5 and 10 µ ASP® Media (synthetic)
Phosphate Esters	All Z-Media® and ASP® media (synthetic) with H (EPR) seal designation
Skydrol®	3, 5, 10 and 25 µ Z-Media® (synthetic) with H.5 seal designation (EPR seals and stainless steel wire mesh in element, and light oil coating on housing exterior)

Unique Non-Bypassing Filtration: A Better Way That Does Not Require High Crush Elements

Schroeder's CFX30 series is a non-bypassing filter that incorporates the use of a unique pressure drop limiting valve that maintains the differential pressure across the element below the element's collapse pressure rating. As the element accumulates dirt, the pressure drop increases across the element and, therefore, across the spool of the valve. At 50 psi, the spool begins to move, restricting flow as needed to prevent the pressure drop from increasing further and compromising element integrity. This design allows the CFX30 filters to safely use the lower cost standard elements, eliminating the need for expensive high-crush replacement elements.

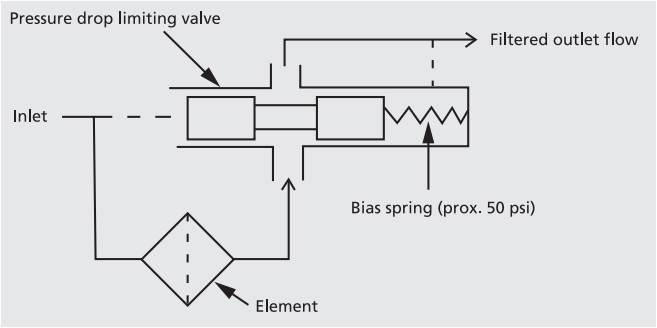

CFX30 Non-Bypassing Pressure Filter

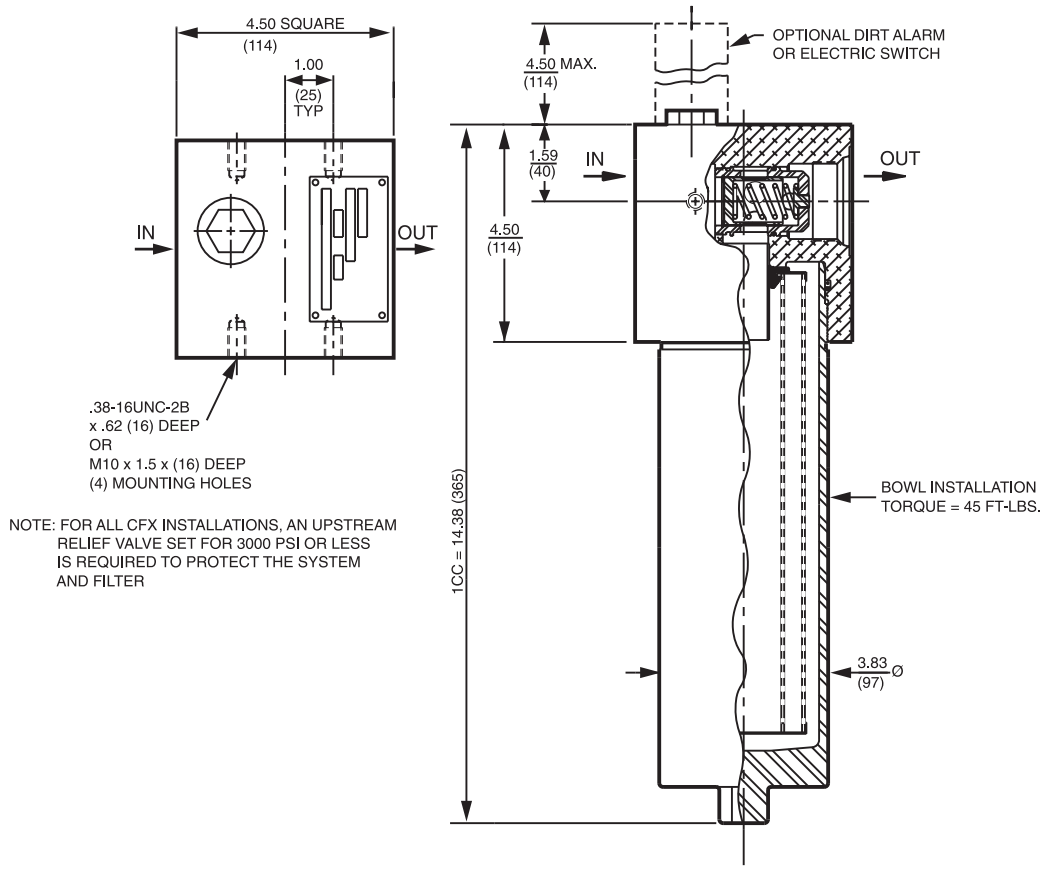

NOTE: FOR ALL CFX INSTALLATIONS, AN UPSTREAM RELIEF VALVE SET FOR 3000 PSI OR LESS IS REQUIRED TO PROTECT THE SYSTEM AND FILTER

Metric dimensions in ( ).
Dimensions shown are inches (millimeters) for general information and overall envelope size only.
For complete dimensions please contact Schroeder Industries to request a certified print.

Element Performance Information & Dirt Holding Capacity

	Filtration Ratio Per ISO 4572/NFPA T3.10.8.8 Using automated particle counter (APC) calibrated per ISO 4402			Filtration Ratio per ISO 16889 Using APC calibrated per ISO 11171	
Element	$ß_x \geq 75$	$ß_x \geq 100$	$ß_x \geq 200$	$ß_x^{(c)} \geq 200$	$ß_x^{(c)} \geq 1000$
CCZ1	<1.0	<1.0	<1.0	<4.0	4.2
CCZ3	<1.0	<1.0	<2.0	<4.0	4.8
CCZ5	2.5	3.0	4.0	4.8	6.3
CCZ10	7.4	8.2	10.0	8.0	10.0
CCZ25	18.0	20.0	22.5	19.0	24.0

Element	DHC (gm)
CCZ1	57
CCZ3	58
CCZ5	63
CCZ10	62
CCZ25	63

Element Collapse Rating: 150 psid (10 bar) for standard elements

Flow Direction: Outside In

Element Nominal Dimensions: CC: 3.0" (75 mm) O.D. x 9.5" (240 mm) long

Pressure Drop Information

Based on Flow Rate and Viscosity

$\Delta P_{housing}$

CFX30 $\Delta P_{housing}$ for fluids with sp gr (specific gravity) = 0.86:

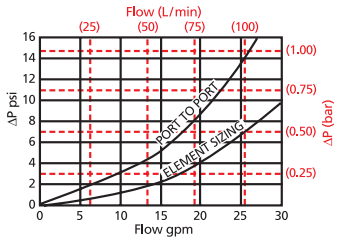

$\Delta P_{element}$

CCZ

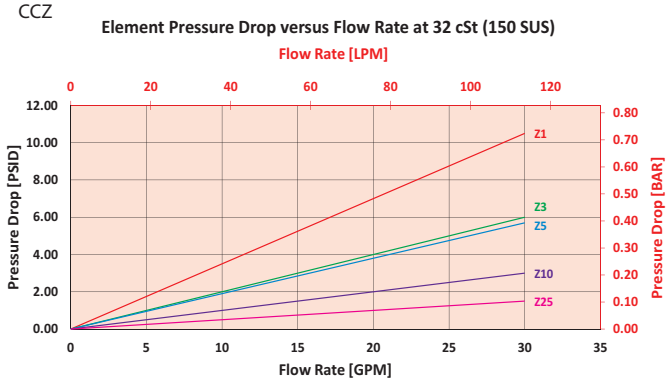

$$\Delta P_{filter} = \Delta P_{housing} + (\Delta P_{element} * V_f)$$

Exercise:

Determine ΔP_{filter} at 15 gpm (57 L/min) for CFX301CZ5SD5 using 100 SUS (21.3 cSt) fluid.

Use the housing pressure curve to determine $\Delta P_{housing}$ at 15 gpm. In this case, $\Delta P_{housing}$ is 5 psi (.34 bar) on the graph for the CFX30 housing.

Use the element pressure curve to determine $\Delta P_{element}$ at 15 gpm. In this case, $\Delta P_{element}$ is 3 psi (.21 bar) according to the graph for the CZ5 element.

Because the viscosity in this sample is 100 SUS (21.3 cSt), we determine the Viscosity Factor (V_f) by dividing the Operating Fluid Viscosity with the Standard Viscosity of 150 SUS (32 cSt). To best determine your Operating Fluid Viscosity, please reference the chart in Appendix D.

Finally, the overall filter pressure differential, ΔP_{filter}, is calculated by adding $\Delta P_{housing}$ with the true element pressure differential, ($\Delta P_{element}$*V_f). The $\Delta P_{element}$ from the graph has to be multiplied by the viscosity factor to get the true pressure differential across the element.

Solution:

$\Delta P_{housing}$ = 5 psi [.34 bar] | $\Delta P_{element}$ = 3 psi [.21 bar]

V_f = 100 SUS (21.3 cSt) / 150 SUS (32 cSt) = .67

ΔP_{filter} = .34 psi + (.21 psi * .67) = .48 psi

OR

ΔP_{filter} = .34 bar + (.21 bar * .67) = .48 bar

Note:
If your element is not graphed, use the following equation:
$\Delta P_{element}$ = Flow Rate x $\Delta P_{f.}$ Plug this variable into the overall pressure drop equation.

Ele.	ΔP
CC3	0.22
CC10	0.13
CC25	0.03
CAS3/CCAS3	0.20
CAS5/CCAS5	0.19
CAS10/CCAS10	0.35

CFX30 Non-Bypassing Pressure Filter

Filter Model Number Selection

How to Build a Valid Model Number for a Schroeder CFX30:

BOX 1	BOX 2	BOX 3	BOX 4	BOX 5	BOX 6	BOX 7	BOX 8
CFX30 –	–	–	–	–	–	–	–

BOX 1	BOX 2	BOX 3	BOX 4	BOX 5	BOX 6	BOX 7	BOX 8	
CFX30 –	CC –	Z –	5 –	–	S –	–	D5	= CFX30CCZ5SD5

BOX 1

Filter Series
CFX30

BOX 2

Number & Size of Elements	
1	C = Single Length CC = Double Length

BOX 3

Media Type	
Omit	= E Media (cellulose)
Z	= Excellement® Z-Media® (synthetic)
AS	= Anti-Stat Media (synthetic)
M	= Media (reusable metal mesh)

BOX 4

Micron Rating	
1 = 1 Micron	(Z-Media®)
3 = 3 Micron	(E, Z, AS Media)
5 = 5 Micron	(Z, AS Media)
10 = 10 Micron	(E, M, Z, AS Media)
25 = 25 Micron	(E & Z-Media®)

BOX 5

Seal Material	
Omit	= Buna N
V	= Viton®
W	= Buna N, Anodized Aluminum parts
H	= EPR
H.5	= Skydrol® compatibility

BOX 6

Porting
S = SAE-20
P = 1¼" NPTF
B = ISO 228 G-1¼"

BOX 7

Options	
Omit	= None
L	= Two ¼" NPTF inlet and outlet female test ports
U	= Schroeder Check 7/16"-20 UNF Test Point installation in cap (upstream)

BOX 8

Dirt Alarm® Options		
	Omit	= None
Visual	D5	= Visual pop-up
Visual with Thermal Lockout	D8	= Visual w/ thermal lockout
Electrical	MS5	= Electrical w/ 12 in. 18 gauge 4-conductor cable
	MS5LC	= Low current MS5
	MS10	= Electrical w/ DIN connector (male end only)
	MS10LC	= Low current MS10
	MS11	= Electrical w/ 12 ft. 4-conductor wire
	MS12	= Electrical w/ 5 pin Brad Harrison connector (male end only)
	MS12LC	= Low current MS12
	MS16	= Electrical w/ weather-packed sealed connector
	MS16LC	= Low current MS16
	MS17LC	= Electrical w/ 4 pin Brad Harrison male connector
Electrical with Thermal Lockout	MS5T	= MS5 (see above) w/ thermal lockout
	MS5LCT	= Low current MS5T
	MS10T	= MS10 (see above) w/ thermal lockout
	MS10LCT	= Low current MS10T
	MS12T	= MS12 (see above) w/ thermal lockout
	MS12LCT	= Low current MS12T
	MS16T	= MS16 (see above) w/ thermal lockout
	MS16LCT	= Low current MS16T
	MS17LCT	= Low current MS17T
Electrical Visual	MS13DC	= Supplied w/ threaded connector & light
	MS14DC	= Supplied w/ 5 pin Brad Harrison connector & light (male end)
Electrical Visual with Thermal Lockout	MS13DCT	= MS13 (see above), direct current, w/ thermal lockout
	MS13DCLCT	= Low current MS13DCT
	MS14DCT	= MS14 (see above), direct current, w/ thermal lockout
	MS14DCLCT	= Low current MS14DCT

NOTES:

Box 2. Replacement element part numbers are identical to contents of Boxes 2, 3, 4 and 5. E media (cellulose) elements are only available with Buna N seals.

Box 5. For options H, V, W, and H.5, all aluminum parts are anodized. H.5 seal designation includes the following: EPR seals, stainless steel wire mesh on elements, and light oil coating on housing exterior. Viton® is a registered trademark of DuPont Dow Elastomers. Skydrol® is a registered trademark of Solutia Inc.

Box 6. B porting option supplied with metric mounting holes.

High Pressure Filter PLD

100 gpm
380 L/min
3000 psi
210 bar

Model No. of filter in photograph is PLD10DVZ3VF24.

Features and Benefits

- Durable carbon steel construction
- Filter housings are designed to withstand pressure surges as well as high static pressure loads
- Screw-in bowl allows the filter element to be easily removed for replacement or cleaning
- Standard model supplied with drain plugs
- Standard Viton® seal on filter housing
- Filter contains an integrated equalization valve
- Pressure is equalized between filters by raising the change-over lever prior to switching it to the relevant filter side

Filter Housing Specifications

Flow Rating:	Up to 100 gpm (380 L/min) for 150 SUS (32 cSt) fluids
Max. Operating Pressure:	3000 psi (207 bar)
Min. Yield Pressure:	10,600 psi (730 bar)
Rated Fatigue Pressure:	3000 psi (207 bar)
Temp. Range:	-22°F to 250°F (-30°C to 121°C)
Bypass Setting:	102 psi (7 bar)
Porting Head: Element Case:	Ductile Iron Steel
Weight of PLD-10DV: Weight of PLD-16DV:	97 lbs. (43.9 kg) 100 lbs. (45.3 kg)
Element Change Clearance:	10DV: 3.5" (89 mm) 16DV: 3.5" (89 mm)

Fluid Compatibility

Type Fluid	Appropriate Schroeder Media
Petroleum Based Fluids	All Z-Media® (synthetic)
Invert Emulsions	10 and 25 µ Z-Media® (synthetic)
Water Glycols	3, 5, 10 and 25 µ Z-Media® (synthetic)

PLD High Pressure Filter

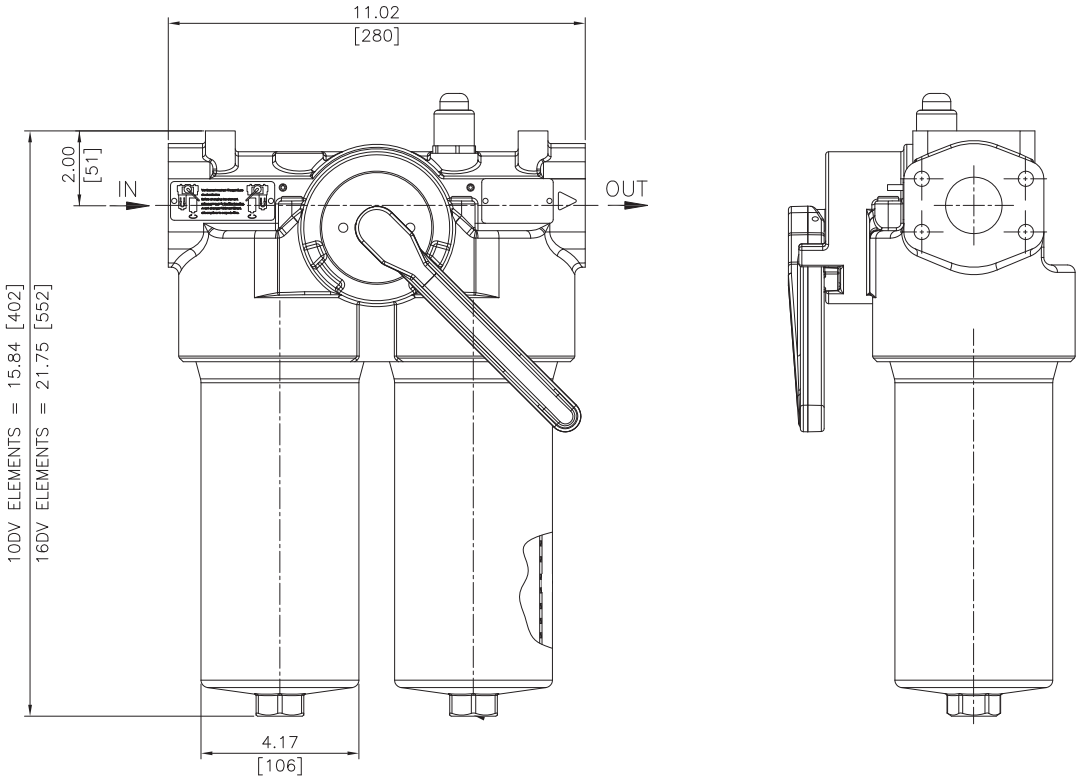

Metric dimensions in ( ).
Dimensions shown are inches (millimeters) for general information and overall envelope size only.
For complete dimensions please contact Schroeder Industries to request a certified print.

Element Performance Information & Dirt Holding Capacity

	Filtration Ratio Per ISO 4572/NFPA T3.10.8.8 Using automated particle counter (APC) calibrated per ISO 4402			Filtration Ratio per ISO 16889 Using APC calibrated per ISO 11171	
Element	$ß_x \geq 75$	$ß_x \geq 100$	$ß_x \geq 200$	$ß_x(c) \geq 200$	$ß_x(c) \geq 1000$
10/16DVZ1	<1.0	<1.0	<1.0	<4.0	4.2
10/16DVZ3	<1.0	<1.0	<2.0	<4.0	4.8
10/16DVZ5	2.5	3.0	4.0	4.8	6.3
10/16DVZ10	7.4	8.2	10.0	8.0	10.0
10/16DVZ25	18.0	20.0	22.5	19.0	24.0

Element	DHC (gm)	Element	DHC (gm)
10DVZ1	57	16DVZ1	110
10DVZ3	59	16DVZ3	114
10DVZ5	64	16DVZ5	124
10DVZ10	62	16DVZ10	112
10DVZ25	63	16DVZ25	102

Element Collapse Rating: 290 psid (20 bar)
Flow Direction: Outside In
Element Nominal Dimensions: 3.0" (75 mm) O.D. x 14.5" (370 mm) long

Pressure Drop Information

Based on Flow Rate and Viscosity

$\Delta P_{housing}$

PLD $\Delta P_{housing}$ for fluids with sp gr (specific gravity) = 0.86:

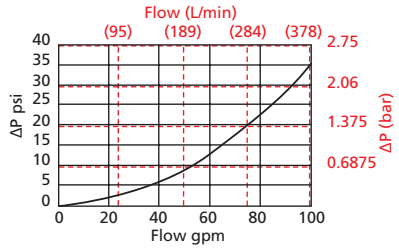

$\Delta P_{element}$

10DVZ

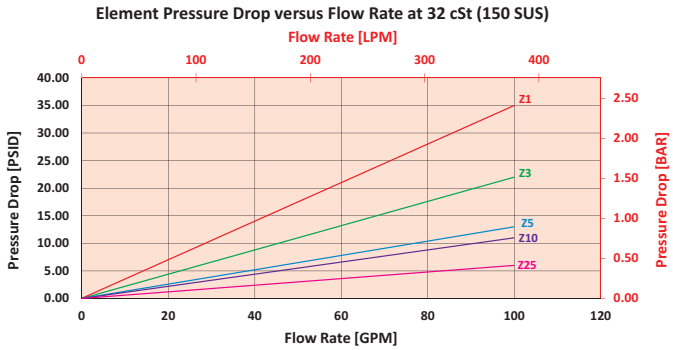

16DVZ

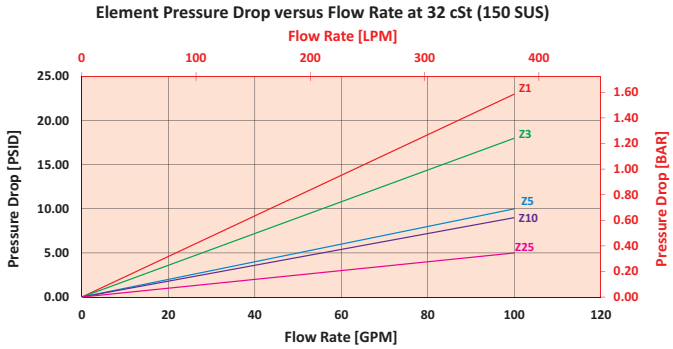

$$\Delta P_{filter} = \Delta P_{housing} + (\Delta P_{element} * V_f)$$

Exercise:

Determine ΔP_{filter} at 50 gpm (189 L/min) for PLD10DVZ1VF24VM using 200 SUS (42.6 cSt) fluid.

Use the housing pressure curve to determine $\Delta P_{housing}$ at 50 gpm. In this case, $\Delta P_{housing}$ is 8 psi (.55 bar) on the graph for the PLD housing.

Use the element pressure curve to determine $\Delta P_{element}$ at 50 gpm. In this case, $\Delta P_{element}$ is 17.5 psi (1.2 bar) according to the graph for the 10DVZ1 element.

Because the viscosity in this sample is 200 SUS (42.6 cSt), we determine the Viscosity Factor (V_f) by dividing the Operating Fluid Viscosity with the Standard Viscosity of 150 SUS (32 cSt). To best determine your Operating Fluid Viscosity, please reference the chart in Appendix D.

Finally, the overall filter pressure differential, ΔP_{filter}, is calculated by adding $\Delta P_{housing}$ with the true element pressure differential, ($\Delta P_{element} * V_f$). The $\Delta P_{element}$ from the graph has to be multiplied by the viscosity factor to get the true pressure differential across the element.

Solution:

$\Delta P_{housing}$ = 8 psi [.55 bar] | $\Delta P_{element}$ = 17.5 psi [1.2 bar]

V_f = 200 SUS (42.6 cSt) / 150 SUS (32 cSt) = 1.3

ΔP_{filter} = 8 psi + (17.5 psi * 1.3) = 30.8 psi

OR

ΔP_{filter} = .55 bar + (1.2 bar * 1.3) = 2.1 bar

Note:
If your element is not graphed, use the following equation:
$\Delta P_{element}$ = Flow Rate x ΔP_f Plug this variable into the overall pressure drop equation.

Ele.	ΔP	Ele.	ΔP	Ele.	ΔP
K3	0.25	KZW25	0.14	2KZW10	0.12
K10	0.09	2K3	0.12	2KZW25	0.07
K25	0.02	2K10	0.05	3K3	0.08
KAS3	0.10	2K25	0.01	3K10	0.03
KAS5	0.08	2KAS3	0.05	3K25	0.01
KAS10	0.05	2KAS5	0.04	3KAS3	0.03
KZX10	0.22	2KAS10	0.03	3KAS5	0.02
KZW1	0.43	2KZX10	0.11	3KAS10	0.02
KZW3	0.32	2KZW1	-	3KZX10	0.07
KZW5	0.28	2KZW3	0.16		
KZW10	0.23	2KZW5	0.14		

PLD High Pressure Filter

Filter Model Number Selection

How to Build a Valid Model Number for a Schroeder PLD:

BOX 1		BOX 2		BOX 3		BOX 4		BOX 5		BOX 6
PLD	–		–		–		–		–	

BOX 1		BOX 2		BOX 3		BOX 4		BOX 5		BOX 6	
PLD	–	10	–	DVZ1	–	V	–	F24	–	VM	= PLD10DVZ1VF24VM

BOX 1

Filter Series
PLD

BOX 2

Length of Elements (in)
10
16

BOX 3

Element Size and Media
DVZ1 = DV size 1 µ synthetic media
DVZ3 = DV size 3 µ synthetic media
DVZ5 = DV size 5 µ synthetic media
DVZ10 = DV size 10 µ synthetic media
DVZ25 = DV size 25 µ synthetic media

BOX 4

Seal Material
Omit = Buna N
V = Viton®

BOX 5

Porting
F24 = 1½" SAE 4-bolt flange Code 61
S24 = SAE-24 (1½")

BOX 6

Dirt Alarm® Options		
	Omit =	None
Visual	VM =	Visual pop-up w/manual rest
Electrical	DW =	AC/DC 3-wire (NO or NC)

VM = Manual Reset

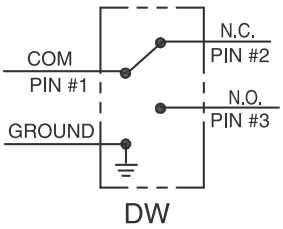

DW = AC/DC 3-wire
(NO or NC)

NOTES:

Box 2. Replacement element part numbers are a combination of Boxes 2, 3 and 4. Example: 16DVZ10

Box 4. Filter housings are supplied with standard Viton seals. Seal designation in Box 4 applies to element only. Viton is a registered trademark of DuPont Dow Elastomers.

Top-Ported Pressure Filter CF40/DF40

Model No. of filters in photograph are CF401CC10SD5 and DF401CCZ10PD5.

Features and Benefits

- Top-ported pressure filter
- Available with non-bypass option with high collapse element
- Offered in pipe, SAE straight thread and ISO 228 porting
- Integral inlet and outlet female test points option available
- No-Element indicator option available

Up to
45 gpm
170 L/min
4000 psi
275 bar

Filter Housing Specifications

Flow Rating:	CF40 - 45 gpm (170 L/min) for 150 SUS (32 cSt) fluids DF40 - 30 gpm (113 L/min) for 150 SUS (32 cSt) fluids
Max. Operating Pressure:	4000 psi (275 bar)
Min. Yield Pressure:	12,000 psi (828 bar), per NFPA T2.6.1
Rated Fatigue Pressure:	1800 psi (125 bar), per NFPA T2.6.1-2005
Temp. Range:	-20°F to 225°F (-29°C to 107°C)
Bypass Setting:	Cracking: 40 psi (2.8 bar) Full Flow: 72 psi (5.0 bar) Non-bypassing model has a blocked bypass.
Porting Head: Element Case:	Aluminum Steel
Weight of CF40/DF40-1C: Weight of CF40/DF40-1CC:	14.0 lbs. (6.4 kg) 19.5 lbs. (8.9 kg)
Element Change Clearance:	4.00" (100 mm) for C elements 8.75" (219 mm) for CC elements

Fluid Compatibility

Type Fluid	Appropriate Schroeder Media
Petroleum Based Fluids	All E Media (cellulose), Z-Media® and ASP® Media (synthetic)
High Water Content	All Z-Media® and ASP® Media (synthetic)
Invert Emulsions	10 and 25 µ Z-Media® (synthetic), 10 µ ASP® Media (synthetic)
Water Glycols	3, 5, 10 and 25 µ Z-Media® (synthetic), and all ASP® Media (synthetic)
Phosphate Esters	All Z-Media® and ASP® Media (synthetic) with H (EPR) seal designation
Skydrol®	3, 5, 10 and 25 µ Z-Media (synthetic) and all ASP Media (synthetic) with H.5 seal designation (EPR seals and stainless steel wire mesh in element, and light oil coating on housing exterior)

CF40/DF40 Top-Ported Pressure Filter

DF40

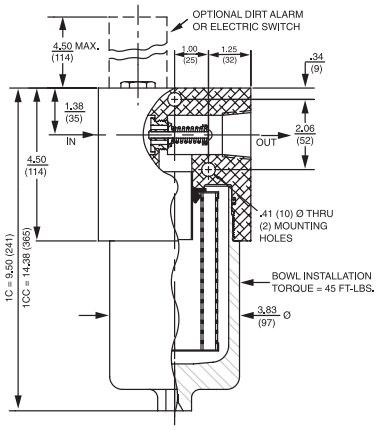

CF40

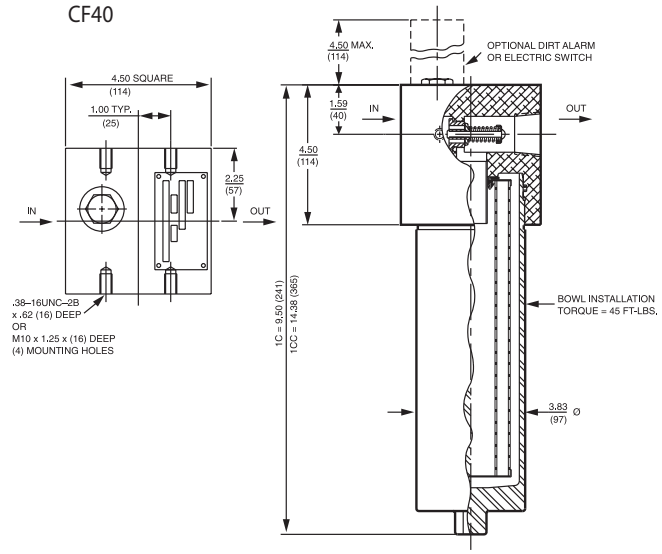

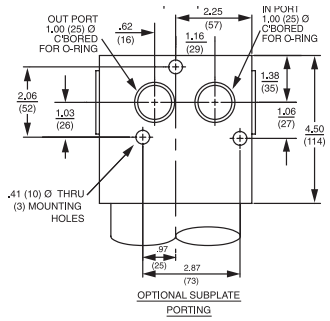

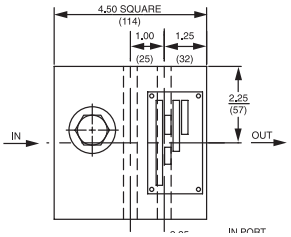

Metric dimensions in ( ).
Dimensions shown are inches (millimeters) for general information and overall envelope size only.
For complete dimensions please contact Schroeder Industries to request a certified print.

Element Performance Information & Dirt Holding Capacity

	Filtration Ratio Per ISO 4572/NFPA T3.10.8.8 Using automated particle counter (APC) calibrated per ISO 4402			Filtration Ratio per ISO 16889 Using APC calibrated per ISO 11171	
Element	$ß_x \geq 75$	$ß_x \geq 100$	$ß_x \geq 200$	$ß_x(c) \geq 200$	$ß_x(c) \geq 1000$
CZ1/CCZ1	<1.0	<1.0	<1.0	<4.0	4.2
CZ3/CCZ3	<1.0	<1.0	<2.0	<4.0	4.8
CZ5/CCZ5	2.5	3.0	4.0	4.8	6.3
CZ10/CCZ10	7.4	8.2	10.0	8.0	10.0
CZ25/CCZ25	18.0	20.0	22.5	19.0	24.0
CCZX3	<1.0	<1.0	<2.0	4.7	5.8
CCZX10	7.4	8.2	10.0	8.0	9.8

Element	DHC (gm)	Element	DHC (gm)
CZ1	25	CCZ1	57
CZ3	26	CCZ3	58
CZ5	30	CCZ5	63
CZ10	28	CCZ10	62
CZ25	28	CCZ25	63
		CCZX3	26*
		CCZX10	28*

Element Collapse Rating: 150 psid (10 bar) for standard elements
3000 psid (210 bar) for high collapse (ZX) versions

Flow Direction: Outside In

Element Nominal Dimensions: C: 3.0" (75 mm) O.D. x 4.75" (120 mm) long
CC: 3.0" (75 mm) O.D. x 9.5" (240 mm) long

* Based on 100 psi terminal pressure

Pressure Drop Information

Based on Flow Rate and Viscosity

$\Delta P_{housing}$

CF40/DF40 $\Delta P_{housing}$ for fluids with sp gr (specific gravity) = 0.86:

CF40- 1-1/4" Porting

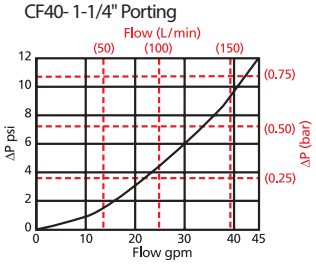

DF40- 1" Porting

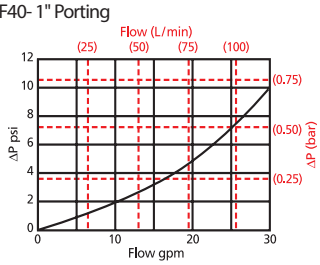

$\Delta P_{element}$

CZ

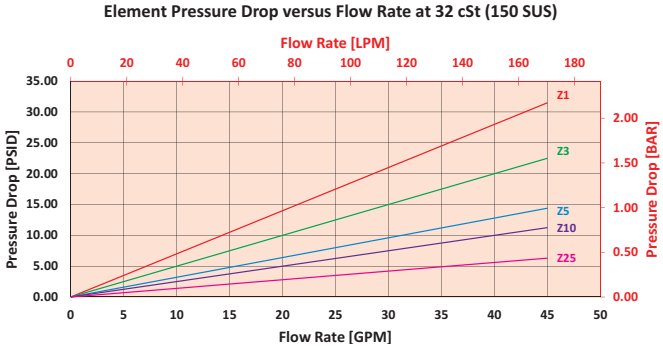

CCZ

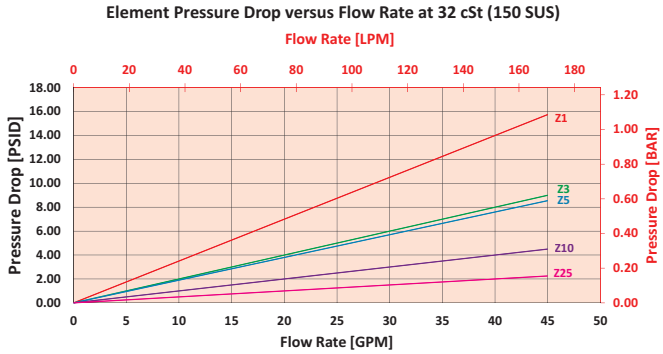

$$\Delta P_{filter} = \Delta P_{housing} + (\Delta P_{element} * V_f)$$

Exercise:

Determine ΔP_{filter} at 25 gpm (94.6 L/min) for CF401CZ10SD5 using 200 SUS (42.6 cSt) fluid.

Use the housing pressure curve to determine $\Delta P_{housing}$ at 25 gpm. In this case, $\Delta P_{housing}$ is 4.5 psi (.31 bar) on the graph for the CF40 housing.

Use the element pressure curve to determine $\Delta P_{element}$ at 25 gpm. In this case, $\Delta P_{element}$ is 6 psi (.42 bar) according to the graph for the CZ10 element.

Because the viscosity in this sample is 200 SUS (42.6 cSt), we determine the Viscosity Factor (V_f) by dividing the Operating Fluid Viscosity with the Standard Viscosity of 150 SUS (32 cSt). To best determine your Operating Fluid Viscosity, please reference the chart in Appendix D.

Finally, the overall filter pressure differential, ΔP_{filter}, is calculated by adding $\Delta P_{housing}$ with the true element pressure differential, ($\Delta P_{element}$*V_f). The $\Delta P_{element}$ from the graph has to be multiplied by the viscosity factor to get the true pressure differential across the element.

Solution:

$\Delta P_{housing}$ = 4.5 psi [.31 bar] | $\Delta P_{element}$ = 6 psi [.42 bar]

V_f = 200 SUS (42.6 cSt) / 150 SUS (32 cSt) = 1.3

ΔP_{filter} = 4.5 psi + (6 psi * 1.3) = 12.3 psi

OR

ΔP_{filter} = .31 bar + (.42 bar * 1.3) = .86 bar

Note:
If your element is not graphed, use the following equation:
$\Delta P_{element}$ = Flow Rate x $\Delta P_{f.}$ Plug this variable into the overall pressure drop equation.

Ele.	ΔP	Ele.	ΔP
C3	0.50	CC3	0.22
C10	0.19	CC10	0.13
C25	0.09	CC25	0.03
CAS3	0.50	CCAS3	0.20
CAS5	0.32	CCAS5	0.19
CAS10	0.25	CCAS10	0.10
		CCZX3	0.29
		CCZX10	0.26

Top-Ported Pressure Filter

Filter Model Number Selection

How to Build a Valid Model Number for a Schroeder CF40:

BOX 1	BOX 2	BOX 3	BOX 4	BOX 5	BOX 6	BOX 7	BOX 8	BOX 9	BOX 10
CF40 –	–	–	–	–	–	–	–	–	–

BOX 1	BOX 2	BOX 3	BOX 4	BOX 5	BOX 6	BOX 7	BOX 8	BOX 9	BOX 10	
CF40 –	1C –	Z –	10 –	–	S –	–	–	D5 –	–	= CF401CZ10SD5

BOX 1

Filter Series
CF40
CFN40 (Non-bypassing: requires ZX high collapse elements)
DF40
DFN40 (Non-bypassing: requires ZX high collapse elements)

BOX 2

Number and Size of Elements	
1	C
	CC

BOX 3

Media Type	
Omit	E Media(Cellulose)
Z	= Excellement® Z-Media® (synthetic)
ZX	= Excellement® Z-Media® (high collapse center tube)
AS	= Anti-Stat Media (synthetic)
M	= Media (reusable metal mesh) D size only

BOX 4

Micron Rating		
1	= 1 Micron	(Z, ZX media)
3	= 3 Micron	(AS, E, Z, ZX media)
5	= 5 Micron	(AS, Z, ZX media)
10	= 10 Micron	(AS, E, M, Z, ZX media)
25	= 25 Micron	(E, Z & ZX media®)

BOX 5

Seal Material	
Omit	= Buna N
V	= Viton®
W	= Buna N, Anodized Aluminum parts
H	= EPR
H.5	= Skydrol® compatibility

BOX 6
*Only for CF40 Configuration

Porting
S = SAE-20"
P = 1¼" NPTF
B = ISO 228 G-1¼"

BOX 6 (Cont.)
*Only for DF40 Configuration

Porting
O = Manifold mounting
S = SAE-16
P = 1" NPTF
B = ISO 228 G-1

BOX 7

Bypass
Omit = 40 PSI Bypass
X = Blocked bypass
25 = 25 psi bypass setting (CF40 only)
30 = 30 psi bypass setting (CF40 only)
50 = 50 psi bypass setting
(Omit box 7 if a non-bypassing filter housing is selected)

BOX 8

Test Ports
Omit = None
L = Two 1/4" NPTF inlet and outlet female test ports

BOX 10

Additional Options
Omit = None
N = No-Element Indicator (CF40 or DF40)

BOX 9

Dirt Alarm® Options		
	Omit =	None
Visual	D =	Pointer
	D5 =	Visual pop-up
Visual with Thermal Lockout	D8 =	Visual w/ thermal lockout
Electrical	MS5 =	Electrical w/ 12 in. 18 gauge 4-conductor cable
	MS5LC =	Low current MS5
	MS10 =	Electrical w/ DIN connector (male end only)
	MS10LC =	Low current MS10
	MS11 =	Electrical w/ 12 ft. 4-conductor wire
	MS12 =	Electrical w/ 5 pin Brad Harrison connector (male end only)
	MS12LC =	Low current MS12
	MS16 =	Electrical w/ weather-packed sealed connector
	MS16LC =	Low current MS16
	MS17LC =	Electrical w/ 4 pin Brad Harrison male connector
Electrical with Thermal Lockout	MS5T =	MS5 (see above) w/ thermal lockout
	MS5LCT =	Low current MS5T
	MS10T =	MS10 (see above) w/ thermal lockout
	MS10LCT =	Low current MS10T
	MS12T =	MS12 (see above) w/ thermal lockout
	MS12LCT =	Low current MS12T
	MS16T =	MS16 (see above) w/ thermal lockout
	MS16LCT =	Low current MS16T
	MS17LCT =	Low current MS17T
Electrical Visual	MS =	Cam operated switch w/ ½" conduit female connection
	MS13DC =	Supplied w/ threaded connector & light
	MS14DC =	Supplied w/ 5 pin Brad Harrison connector & light (male end)
Electrical Visual with Thermal Lockout	MS13DCT =	MS13 (see above), direct current, w/ thermal lockout
	MS13DCLCT =	Low current MS13DCT
	MS14DCT =	MS14 (see above), direct current, w/ thermal lockout
	MS14DCLCT =	Low current MS14DCT

NOTES:

Box 2. Replacement element part numbers are identical to contents of Boxes 2, 3, 4 and 5.

Box 5. For options H, V, W, and H.5, all aluminum parts are anodized. H.5 seal designation includes the following: EPR seals, stainless steel wire mesh on elements, and light oil coating on housing exterior. Viton® is a registered trademark of DuPont Dow Elastomers. Skydrol® is a registered trademark of Solutia Inc.

Box 6. B porting option supplied with metric mounting holes.

Box 7. When X is paired with a standard filter series, a standard bushing and spring plate will be used.

Box 9. Standard indicator setting for non-bypassing model is 50 psi unless otherwise noted.

Box 10. N option is not available with CFN40 or DFN40. N option should be used in conjunction with dirt alarm.

Top-Ported Pressure Filter PF40

Model No. of filter in photograph is PF409HZ10S.

Features and Benefits

- Top-ported pressure filter
- All steel housing offers unparalleled fatigue rating
- Available with non-bypass option with high collapse element
- Two bowl lengths provide optimal sizing for the application
- Offered in conventional sub-plate, SAE straight thread, and ISO 228 porting

50 gpm
190 L/min
4000 psi
275 bar

Filter Housing Specifications

Flow Rating:	Up to 50 gpm (190 L/min) for 150 SUS (32 cSt) fluids
Max. Operating Pressure:	4000 psi (275 bar)
Min. Yield Pressure:	12,000 psi (828 bar), per NFPA T2.6.1
Rated Fatigue Pressure:	2500 psi (173 bar), per NFPA T2.6.1-R1-2005
Temp. Range:	-20°F to 225°F (-29°C to 107°C)
Bypass Setting:	Cracking: 40 psi (2.8 bar) Full Flow: 75 psi (5.2 bar)
Porting Head: Element Case:	Steel Steel
Weight of PF40-5H: Weight of PF40-9H:	21.8 lbs. (9.9 kg) 25.5 lbs. (11.6 kg)
Element Change Clearance:	3.25" (83 mm)

Fluid Compatibility

Type Fluid	Appropriate Schroeder Media
Petroleum Based Fluids	All E Media (cellulose) and Z-Media® (synthetic)
High Water Content	All Z-Media® (synthetic)
Invert Emulsions	10 and 25 µ Z-Media® (synthetic)
Water Glycols	3, 5, 10 and 25 µ Z-Media® (synthetic)
Phosphate Esters	All Z-Media® (synthetic) with H (EPR) seal designation

PF40 Top-Ported Pressure Filter

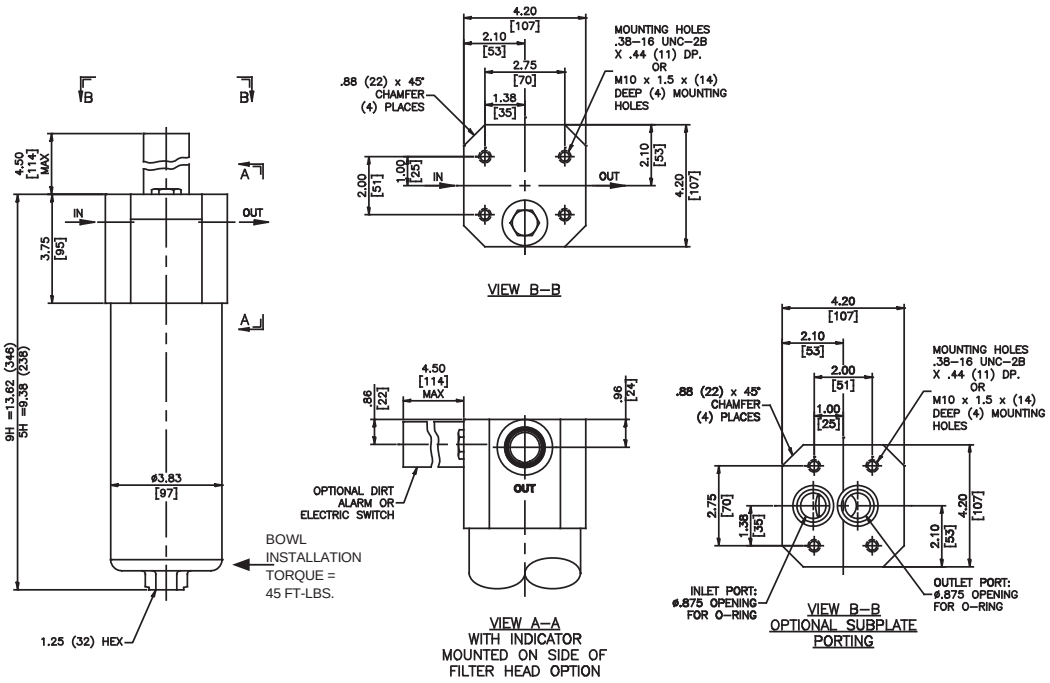

Metric dimensions in ( ).
Dimensions shown are inches (millimeters) for general information and overall envelope size only.
For complete dimensions please contact Schroeder Industries to request a certified print.

Element Performance Information & Dirt Holding Capacity

Element	Filtration Ratio Per ISO 4572/NFPA T3.10.8.8 Using automated particle counter (APC) calibrated per ISO 4402			Filtration Ratio per ISO 16889 Using APC calibrated per ISO 11171	
	$ß_x \geq 75$	$ß_x \geq 100$	$ß_x \geq 200$	$ß_x(c) \geq 200$	$ß_x(c) \geq 1000$
5HZ1/9HZ1	<1.0	<1.0	<1.0	<4.0	4.2
5HZ3/9HZ3	<1.0	<1.0	<2.0	<1.0	4.8
5HZ5/9HZ5	2.5	3.0	4.0	4.8	6.3
5HZ10/9HZ10	7.4	8.2	10.0	8.0	10.0
5HZ25/9HZ25	18.0	20.0	22.5	19.0	24.0
5HZX1/9HZX1	<1.0	<1.0	<1.0	<4.0	4.2
5HZX3/9HZX3	<1.0	<1.0	<2.0	<1.0	4.8
5HZX5/9HZX5	2.5	3.0	4.0	4.8	6.3
5HZX10/9HZX10	7.4	8.2	10.0	8.0	10.0
5HZX25/9HZX25	18.0	20.0	22.5	19.0	24.0

Element	DHC (gm)	Element	DHC (gm)	Element	DHC (gm)	Element	DHC (gm)
5HZ1	26	9HZ1	51	5HZX1	14	9HZX1	29
5HZ3	28	9HZ3	42	5HZX3	14	9HZX3	29
5HZ5	39	9HZ5	59	5HZX5	15	9HZX5	31
5HZ10	31	9HZ10	47	5HZX10	15	9HZX10	31
5HZ25	32	9HZ25	48	5HZX25	16	9HZX25	33

Element Collapse Rating: 150 psid (10 bar) for standard elements
3000 psid (210 bar) for high collapse elements

Flow Direction: Outside In

Element Nominal Dimensions: 5H: 2.5" (100 mm) O.D. x 5.36" (136 mm) long
9H: 2.5" (100 mm) O.D. x 9.63" (244 mm) long

Pressure Drop Information

Based on Flow Rate and Viscosity

$\Delta P_{housing}$

PF40 $\Delta P_{housing}$ for fluids with sp gr (specific gravity) = 0.86:

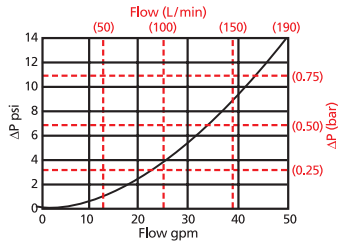

$\Delta P_{element}$

5HZ

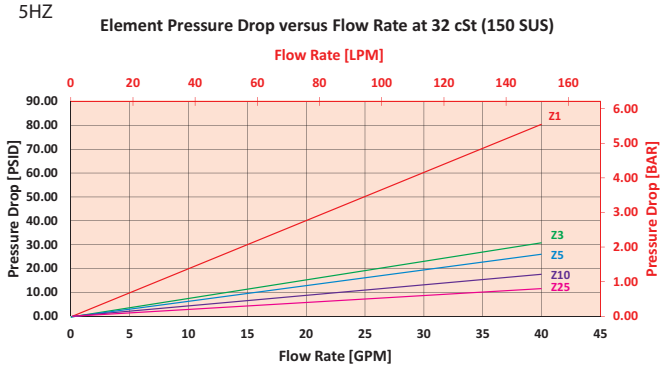

9HZ

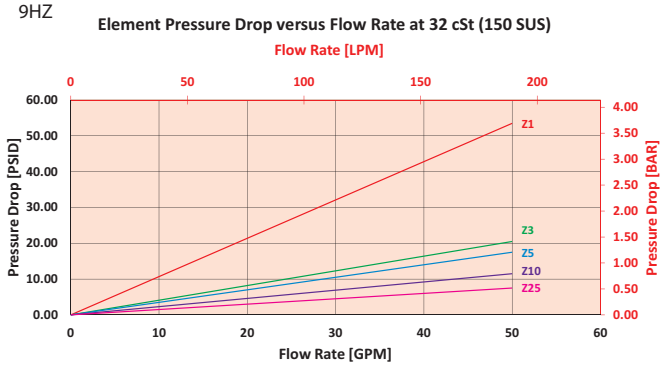

$$\Delta P_{filter} = \Delta P_{housing} + (\Delta P_{element} * V_f)$$

Exercise:

Determine ΔP_{filter} at 20 gpm (75.7 L/min) for PF405HZ3SD5S using 160 SUS (34 cSt) fluid.

Use the housing pressure curve to determine $\Delta P_{housing}$ at 20 gpm. In this case, $\Delta P_{housing}$ is 2.5 psi (.17 bar) on the graph for the PF40 housing.

Use the element pressure curve to determine $\Delta P_{element}$ at 20 gpm. In this case, $\Delta P_{element}$ is 15 psi (1 bar) according to the graph for the 5HZ3 element.

Because the viscosity in this sample is 160 SUS (34 cSt), we determine the Viscosity Factor (V_f) by dividing the Operating Fluid Viscosity with the Standard Viscosity of 150 SUS (32 cSt). To best determine your Operating Fluid Viscosity, please reference the chart in Appendix D.

Finally, the overall filter pressure differential, ΔP_{filter}, is calculated by adding $\Delta P_{housing}$ with the true element pressure differential, ($\Delta P_{element} * V_f$). The $\Delta P_{element}$ from the graph has to be multiplied by the viscosity factor to get the true pressure differential across the element.

Solution:

$\Delta P_{housing}$ = 2.5 psi [.17 bar] | $\Delta P_{element}$ = 15 psi [1 bar]

V_f = 160 SUS (34 cSt) / 150 SUS (32 cSt) = 1.1

ΔP_{filter} = 2.5 psi + (15 psi * 1.1) = 19 psi

OR

ΔP_{filter} = .17 bar + (1 bar * 1.1) = 1.3 bar

Note:
If your element is not graphed, use the following equation:
$\Delta P_{element}$ = Flow Rate x $\Delta P_{f.}$ Plug this variable into the overall pressure drop equation.

Ele.	ΔP
5HZX3	1.17
5HZX10	0.50
5HZX25	0.27
9HZX3	0.62
9HZX10	0.26
9HZX25	0.14

PF40 Top-Ported Pressure Filter

Filter Model Number Selection

How to Build a Valid Model Number for a Schroeder PF40:

BOX 1	BOX 2	BOX 3	BOX 4	BOX 5	BOX 6	BOX 7	BOX 8	BOX 9	BOX 10
PF40									

BOX 1	BOX 2	BOX 3	BOX 4	BOX 5	BOX 6	BOX 7	BOX 8	BOX 9	BOX 10	
PF40	5	HZ3		S			D5	S		= PF405HZ3SD5S

BOX 1

Filter Series
PF40
PFN40 (Non-bypassing: requires ZX high collapse elements)

BOX 2

Element Length (in)
5
9

BOX 3

Element Part Number	
HZ1	= H size 1 µ Excellement® Z-Media® (synthetic)
HZ3	= H size 3 µ Excellement® Z-Media® (synthetic)
HZ5	= H size 5 µ Excellement® Z-Media® (synthetic)
HZ10	= H size 10 µ Excellement® Z-Media® (synthetic)
HZ25	= H size 25 µ Excellement® Z-Media® (synthetic)
HZX3	= H size 3 µ Excellement® Z-Media® (high collapse center tube)
HZX10	= H size 10 µ Excellement® Z-Media® (high collapse center tube)
HZX25	= H size 25 µ Excellement® Z-Media® (high collapse center tube)

BOX 4

Seal Material	
Omit	= Buna N
H	= EPR
V	= Viton®
H.5	= Skydrol® compatibility

BOX 5

Porting	
S	= SAE-16
B	= ISO 228 G-1"

BOX 6

Bypass	
Omit	= 40 PSI bypass
X	= Blocked Bypass
50	= 50 PSI bypass

(Omit box 6 if PFN40 is used)

BOX 7

Test Points	
Omit	= None
L	= Two ¼" NPTF inlet & outlet female test ports
U	= Schroeder Check 7/16"-20 UNF test point installation in head (upstream)

BOX 8

Dirt Alarm® Options		
	Omit =	None
Visual	D5 =	Visual pop-up
Visual with Thermal Lockout	D8 =	Visual w/ thermal lockout
Electrical	MS5 =	Electrical w/ 12 in. 18 gauge 4-conductor cable
	MS5LC =	Low current MS5
	MS10 =	Electrical w/ DIN connector (male end only)
	MS10LC =	Low current MS10
	MS11 =	Electrical w/ 12 ft. 4-conductor wire
	MS12 =	Electrical w/ 5 pin Brad Harrison connector (male end only)
	MS12LC =	Low current MS12
	MS16 =	Electrical w/ weather-packed sealed connector
	MS16LC =	Low current MS16
	MS17LC =	Electrical w/ 4 pin Brad Harrison male connector
Electrical with Thermal Lockout	MS5T =	MS5 (see above) w/ thermal lockout
	MS5LCT =	Low current MS5T
	MS10T =	MS10 (see above) w/ thermal lockout
	MS10LCT =	Low current MS10T
	MS12T =	MS12 (see above) w/ thermal lockout
	MS12LCT =	Low current MS12T
	MS16T =	MS16 (see above) w/ thermal lockout
	MS16LCT =	Low current MS16T
	MS17LCT =	Low current MS17T
Electrical Visual	MS13DC =	Supplied w/ threaded connector & light
	MS14DC =	Supplied w/ 5 pin Brad Harrison connector & light (male end)
Electrical Visual with Thermal Lockout	MS13DCT =	MS13 (see above), direct current, w/ thermal lockout
	MS13DCLCT =	Low current MS13DCT
	MS14DCT =	MS14 (see above), direct current, w/ thermal lockout
	MS14DCLCT =	Low current MS14DCT

BOX 9

Dirt Alarm® Location	
Omit	= Top mounted
S	= Side mounted

BOX 10

Bowl Drain Options	
Omit	= None
DR	= Drain 7/16"-20

NOTES:

Box 2. Replacement element part numbers are a combination of Boxes 2, 3 and 4. Example: 5HZ10V

Box 4. For options H, V, and H.5, all aluminum parts are anodized. H.5 seal designation includes the following: EPR seals, stainless steel wire mesh on elements, and light oil coating on housing exterior. Viton® is a registered trademark of DuPont Dow Elastomers. Skydrol® is a registered trademark of Solutia Inc.

Box 5. B porting option supplied with metric mounting holes.

Box 6. When X is paired with a standard filter series, a standard bushing and spring plate will be used.

Box 8. Standard indicator setting for non-bypassing model is 50 psi unless otherwise noted.

Manifold Mounted Pressure Filter RFS50

Model No. of filter in photograph is RFS508R10O.

Features and Benefits

- Manifold mounted high pressure filter
- Offered in square head conventional subplate porting
- Direct mounting to customer's manifold
- Standard drain plug in bowl for easy servicing
- Various dirt alarm options available

30 gpm
115 L/min
5000 psi
345 bar

Filter Housing Specifications

Flow Rating:	Up to 30 gpm (115 L/min) for 150 SUS (32 cSt) fluids
Max. Operating Pressure:	5000 psi (345 bar)
Min. Yield Pressure:	15,500 psi (1070 bar), per NFPA T2.6.1
Rated Fatigue Pressure:	Contact Factory
Temp. Range:	-20°F to 225°F (-29°C to 107°C)
Bypass Setting:	Cracking: 40 psi (2.8 bar) Full Flow: 56 psi (3.9 bar)
Porting Head: Element Case:	Steel Steel
Weight of RFS50-8R:	16.50 lbs. (7.5 kg)
Element Change Clearance:	3.0" (75 mm)

Fluid Compatibility

Type Fluid	Appropriate Schroeder Media
Petroleum Based Fluids	All E Media (cellulose) and Z-Media® (synthetic)
High Water Content	All Z-Media® (synthetic)
Invert Emulsions	10 and 25 µ Z-Media® (synthetic)
Water Glycols	3, 5, 10 and 25 µ Z-Media® (synthetic)
Phosphate Esters	All Z-Media® (synthetic) with H (EPR) seal designation
Skydrol®	3, 5, 10 and 25 µ Z-Media® (synthetic) with H.5 seal designation (EPR seals and stainless steel wire mesh in element, and light oil coating on housing exterior)

RFS50 Manifold Mounted Pressure Filter

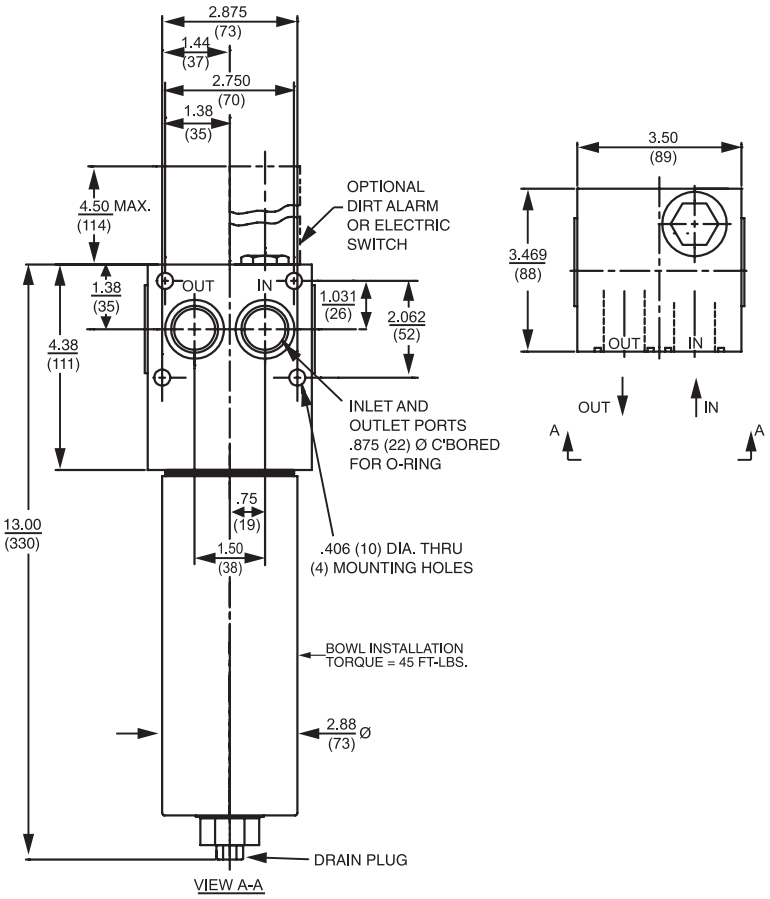

Metric dimensions in ( ).
Dimensions shown are inches (millimeters) for general information and overall envelope size only.
For complete dimensions please contact Schroeder Industries to request a certified print.

Element Performance Information & Dirt Holding Capacity

	Filtration Ratio Per ISO 4572/NFPA T3.10.8.8 Using automated particle counter (APC) calibrated per ISO 4402			Filtration Ratio per ISO 16889 Using APC calibrated per ISO 11171	
Element	$ß_x \geq 75$	$ß_x \geq 100$	$ß_x \geq 200$	$ß_x^{(c)} \geq 200$	$ß_x^{(c)} \geq 1000$
8RZ1	<1.0	<1.0	<1.0	<4.0	4.2
8RZ3	<1.0	<1.0	<2.0	<4.0	4.8
8RZ5	2.5	3.0	4.0	4.8	6.3
8RZ10	7.4	8.2	10.0	8.0	10.0
8RZ25	18.0	20.0	22.5	19.0	24.0

Element	DHC (gm)
8RZ1	33
8RZ3	26
8RZ5	51
8RZ10	29
8RZ25	30

Element Collapse Rating: 150 psid (10 bar) for standard elements
Flow Direction: Outside In
Element Nominal Dimensions: 2.18" (55 mm) O.D. x 8.15" (206 mm) long

Pressure Drop Information

Based on Flow Rate and Viscosity

$\Delta P_{housing}$

RFS50 $\Delta P_{housing}$ for fluids with sp gr (specific gravity) = 0.86:

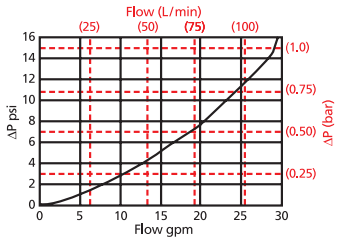

$\Delta P_{element}$

8RZ

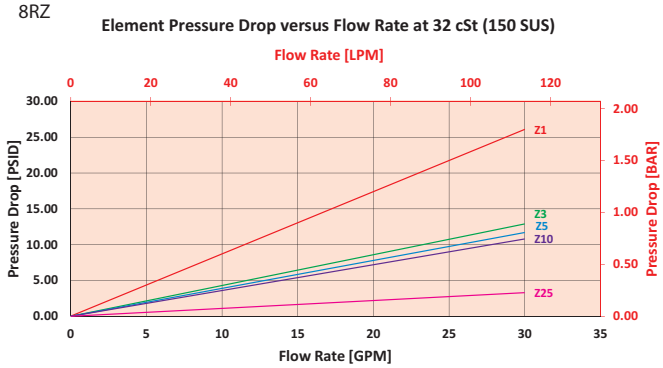

$$\Delta P_{filter} = \Delta P_{housing} + (\Delta P_{element} * V_f)$$

Exercise:

Determine ΔP_{filter} at 15 gpm (57 L/min) for RFS508RZ10VOD5 using 200 SUS (42.6 cSt) fluid.

Use the housing pressure curve to determine $\Delta P_{housing}$ at 15 gpm. In this case, $\Delta P_{housing}$ is 5 psi (.34 bar) on the graph for the RFS50 housing.

Use the element pressure curve to determine $\Delta P_{element}$ at 15 gpm. In this case, $\Delta P_{element}$ is 5 psi (.34 bar) according to the graph for the 8RZ10 element.

Because the viscosity in this sample is 200 SUS (42.6 cSt), we determine the Viscosity Factor (V_f) by dividing the Operating Fluid Viscosity with the Standard Viscosity of 150 SUS (32 cSt). To best determine your Operating Fluid Viscosity, please reference the chart in Appendix D.

Finally, the overall filter pressure differential, ΔP_{filter}, is calculated by adding $\Delta P_{housing}$ with the true element pressure differential, ($\Delta P_{element} * V_f$). The $\Delta P_{element}$ from the graph has to be multiplied by the viscosity factor to get the true pressure differential across the element.

Solution:

$\Delta P_{housing}$ = 5 psi [.34 bar] | $\Delta P_{element}$ = 5 psi [.34 bar]

V_f = 200 SUS (42.6 cSt) / 150 SUS (32 cSt) = 1.3

ΔP_{filter} = 5 psi + (5 psi * 1.3) = 11.5 psi

OR

ΔP_{filter} = .34 bar + (.34 bar * 1.3) = .78 bar

Note:
If your element is not graphed, use the following equation:
$\Delta P_{element}$ = Flow Rate x $\Delta P_{f.}$ Plug this variable into the overall pressure drop equation.

Ele.	ΔP
8R3	0.35
8R10	0.30

RFS50 Manifold Mounted Pressure Filter

Filter Model Number Selection

How to Build a Valid Model Number for a Schroeder RFS50:

BOX 1	BOX 2	BOX 3	BOX 4	BOX 5	BOX 6	BOX 7	BOX 8
RFS50 –	–	–	–	–	–	–	–

BOX 1	BOX 2	BOX 3	BOX 4	BOX 5	BOX 6	BOX 7	BOX 8	
RFS50 –	8 –	RZ10 –	V –	O –	–	–	D5	= RFS508RZ10VOD5

BOX 1

Filter Series
RFS50
RFSN50

BOX 2

Element Length (in)
8

BOX 3

Element Size and Media
R3 = R size 3 µ E media (cellulose)
R10 = R size 10 µ E media (cellulose)
RZ1 = R size 1 µ Excellement® Z-Media® (synthetic)
RZ3 = R size 3 µ Excellement® Z-Media® (synthetic)
RZ5 = R size 5 µ Excellement® Z-Media® (synthetic)
RZ10 = R size 10 µ Excellement® Z-Media® (synthetic)
RZ25 = R size 25 µ Excellement® Z-Media® (synthetic)
RZX1 = R size 1 µ Excellement® Z-Media® (high collapse center tube)
RZX3 = R size 3 µ Excellement® Z-Media® (high collapse center tube)
RZX5 =R size 5 µ Excellement® Z-Media® (high collapse center tube)
RZX10 = R size 10 µ Excellement® Z-Media® (high collapse center tube)
RZX25 = R size 25 µ Excellement® Z-Media® (high collapse center tube)

BOX 4

Seal Material
Omit = Buna N
H = EPR
V = Viton®

BOX 5

Inlet Port
O = Manifold mounting

BOX 6

Options
Omit = 40 PSI Bypass
X = Blocked bypass
50 = 50 psi bypass setting
(Omit Box 6 if RFSN50 is used)

BOX 7

Test Points
L = Two 1/4" NPTF inlet and outlet female test ports
U = Schroeder Check 7/16"-20 UNF Test Point installation in head (upstream)

BOX 8

Dirt Alarm® Options		
	Omit =	None
Visual	D5 =	Visual pop-up
Visual with Thermal Lockout	D8 =	Visual w/ thermal lockout
Electrical	MS5 =	Electrical w/ 12 in. 18 gauge 4-conductor cable
	MS5LC =	Low current MS5
	MS10 =	Electrical w/ DIN connector (male end only)
	MS10LC =	Low current MS10
	MS11 =	Electrical w/ 12 ft. 4-conductor wire
	MS12 =	Electrical w/ 5 pin Brad Harrison connector (male end only)
	MS12LC =	Low current MS12
	MS16 =	Electrical w/ weather-packed sealed connector
	MS16LC =	Low current MS16
	MS17LC =	Electrical w/ 4 pin Brad Harrison male connector
Electrical with Thermal Lockout	MS5T =	MS5 (see above) w/ thermal lockout
	MS5LCT =	Low current MS5T
	MS10T =	MS10 (see above) w/ thermal lockout
	MS10LCT =	Low current MS10T
	MS12T =	MS12 (see above) w/ thermal lockout
	MS12LCT =	Low current MS12T
	MS16T =	MS16 (see above) w/ thermal lockout
	MS16LCT =	Low current MS16T
	MS17LCT =	Low current MS17T
Electrical Visual	MS13DC =	Supplied w/ threaded connector & light
	MS14DC=	Supplied w/ 5 pin Brad Harrison connector & light (male end)
Electrical Visual with Thermal Lockout	MS13DCT =	MS13 (see above), direct current, w/ thermal lockout
	MS13DCLCT =	Low current MS13DCT
	MS14DCT =	MS14 (see above), direct current, w/ thermal lockout
	MS14DCLCT =	Low current MS14DCT

NOTES:

Box 2. Replacement element part numbers are a combination of Boxes 2, 3, and 4.

Box 3. Example: 8RZ1V synthetic media elements are only available with Viton seals.

Box 4. Viton® is a registered trademark of DuPont Dow Elastomers.

Box 5. For option O, O-rings included, fastening hardware not included.

Box 6. When X is paired with a standard filter series, a standard bushing and spring plate will be used

Top-Ported Pressure Filter RF60

Model No. of filter in photograph is RF608R10P.

Features and Benefits

- Top-ported high pressure filter
- Offered in pipe, SAE straight thread, flanged and ISO 228 porting
- Available with non-bypass option with high collapse element
- Various dirt alarm options available

30 gpm
115 L/min
6000 psi
415 bar

Filter Housing Specifications

Flow Rating:	Up to 30 gpm (115 L/min) for 150 SUS (32 cSt) fluids
Max. Operating Pressure:	6000 psi (415 bar)
Min. Yield Pressure:	18,000 psi (1241 bar), per NFPA T2.6.1
Rated Fatigue Pressure:	2300 psi (159 bar), per NFPA T2.6.1-2005
Temp. Range:	-20°F to 225°F (-29°C to 107°C)
Bypass Setting:	Cracking: 40 psi (2.8 bar) Full Flow: 56 psi (3.9 bar) Non-bypassing model has a blocked bypass.
Porting Head: Element Case:	Steel Steel
Weight of RF60-8R:	15.75 lbs. (7.2 kg)
Element Change Clearance:	3.0" (75 mm)

Fluid Compatibility

Type Fluid	Appropriate Schroeder Media
Petroleum Based Fluids	All E-Media (cellulose) and Z-Media® (synthetic)
High Water Content	All Z-Media® (synthetic)
Invert Emulsions	10 and 25 µ Z-Media® (synthetic)
Water Glycols	3, 5, 10 and 25 µ Z-Media® (synthetic)
Phosphate Esters	All Z-Media® (synthetic) with H (EPR) seal designation
Skydrol®	3, 5, 10 and 25 µ Z-Media® (synthetic) with H.5 seal designation (EPR seals and stainless steel wire mesh in element, and light oil coating on housing exterior)

RF60 Top-Ported Pressure Filter

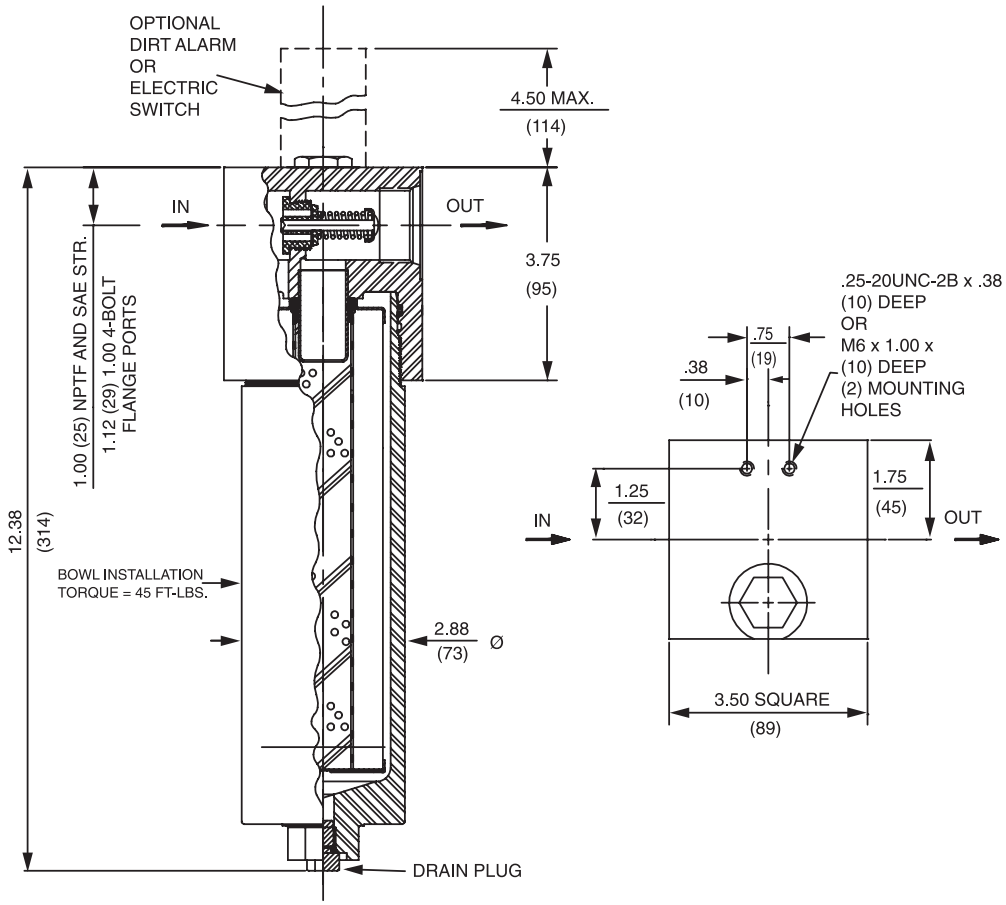

Metric dimensions in ( ).
Dimensions shown are inches (millimeters) for general information and overall envelope size only.
For complete dimensions please contact Schroeder Industries to request a certified print.

Element Performance Information & Dirt Holding Capacity

Element	Filtration Ratio Per ISO 4572/NFPA T3.10.8.8 Using automated particle counter (APC) calibrated per ISO 4402			Filtration Ratio per ISO 16889 Using APC calibrated per ISO 11171	
	$ß_x \geq 75$	$ß_x \geq 100$	$ß_x \geq 200$	$ß_{x(c)} \geq 200$	$ß_{x(c)} \geq 1000$
8RZ1	<1.0	<1.0	<1.0	<4.0	4.2
8RZ3	<1.0	<1.0	<2.0	<4.0	4.8
8RZ5	2.5	3.0	4.0	4.8	6.3
8RZ10	7.4	8.2	10.0	8.0	10.0
8RZ25	18.0	20.0	22.5	19.0	24.0
8RZX3	<1.0	<1.0	<2.0	4.7	5.8
8RZX10	7.4	8.2	10.0	8.0	9.8

Element	DHC (gm)
8RZ1	33
8RZ3	26
8RZ5	51
8RZ10	29
8RZ25	30
8RZX3	C/F
8RZX10	C/F

Element Collapse Rating: 150 psid (10 bar) for standard elements
3000 psid (210 bar) for high collapse (ZX) versions

Flow Direction: Outside In

Element Nominal Dimensions: 2.18" (55 mm) O.D. x 8.15" (206 mm) long

Pressure Drop Information

Based on Flow Rate and Viscosity

$\Delta P_{housing}$

RF60 $\Delta P_{housing}$ for fluids with sp gr (specific gravity) = 0.86:

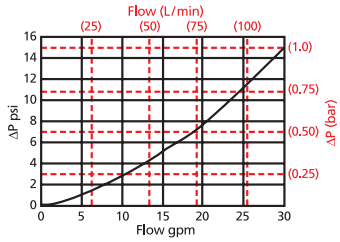

$\Delta P_{element}$

8RZ

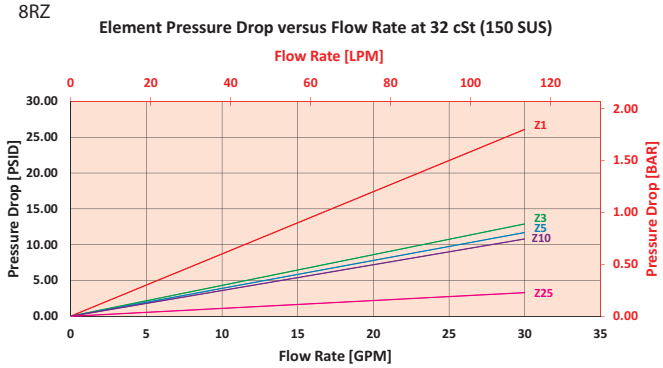

$$\Delta P_{filter} = \Delta P_{housing} + (\Delta P_{element} * V_f)$$

Exercise:

Determine ΔP_{filter} at 15 gpm (57 L/min) for RF608RZ10VPD5 using 100 SUS (21.3 cSt) fluid.

Use the housing pressure curve to determine $\Delta P_{housing}$ at 15 gpm. In this case, $\Delta P_{housing}$ is 5 psi (.34 bar) on the graph for the RF60 housing.

Use the element pressure curve to determine $\Delta P_{element}$ at 15 gpm. In this case, $\Delta P_{element}$ is 5 psi (.34 bar) according to the graph for the 8RZ10 element.

Because the viscosity in this sample is 100 SUS (21.3 cSt), we determine the Viscosity Factor (V_f) by dividing the Operating Fluid Viscosity with the Standard Viscosity of 150 SUS (32 cSt). To best determine your Operating Fluid Viscosity, please reference the chart in Appendix D.

Finally, the overall filter pressure differential, ΔP_{filter}, is calculated by adding $\Delta P_{housing}$ with the true element pressure differential, ($\Delta P_{element}$*V_f). The $\Delta P_{element}$ from the graph has to be multiplied by the viscosity factor to get the true pressure differential across the element.

Solution:

$\Delta P_{housing}$ = 5 psi [.34 bar] | $\Delta P_{element}$ = 5 psi [.34 bar]

V_f = 100 SUS (21.3 cSt) / 150 SUS (32 cSt) = .67

ΔP_{filter} = 5 psi + (5 psi * .67) = 8.3 psi

OR

ΔP_{filter} = .34 bar + (.34 bar * .67) = .57 bar

Note:
If your element is not graphed, use the following equation:
$\Delta P_{element}$ = Flow Rate x $\Delta P_{f.}$ Plug this variable into the overall pressure drop equation.

Ele.	ΔP
8R3	0.35
8R10	0.30
8RZX3	C/F
8RZX10	C/F

RF60 Top-Ported Pressure Filter

Filter Model Number Selection

How to Build a Valid Model Number for a Schroeder RF60:

BOX 1	BOX 2	BOX 3	BOX 4	BOX 5	BOX 6	BOX 7	BOX 8
RF60 –	–	–	–	–	–	–	–

BOX 1	BOX 2	BOX 3	BOX 4	BOX 5	BOX 6	BOX 7	BOX 8	
RF60 –	8 –	RZ10 –	V –	P –	–	–	D5	= RF608RZ10VPD5

BOX 1

Filter Series
RF60
RFN60 (Non-bypassing: requires ZX high collapse elements)

BOX 2

Element Length (in)
8

BOX 3

Element Size and Media	
R3	= R size 3 µ E media (cellulose)
R10	= R size 10 µ E media (cellulose)
RZ1	= R size 1 µ Excellement® Z-Media® (synthetic)
RZ3	= R size 3 µ Excellement® Z-Media® (synthetic)
RZ5	= R size 5 µ Excellement® Z-Media® (synthetic)
RZ10	= R size 10 µ Excellement® Z-Media® (synthetic)
RZ25	= R size 25 µ Excellement® Z-Media® (synthetic)
RZX1	= R size 1 µ Excellement® Z-Media® (high collapse center tube)
RZX3	= R size 3 µ Excellement® Z-Media® (high collapse center tube)
RZX5	= R size 5 µ Excellement® Z-Media® (high collapse center tube)
RZX10	= R size 10 µ Excellement® Z-Media® (high collapse center tube)
RZX25	= R size 25 µ Excellement® Z-Media® (high collapse center tube)

BOX 4

Seal Material	
Omit	= Buna N
H	= EPR
V	= Viton®

BOX 5

Inlet Port	
P =	1" NPTF
S =	SAE-16
F =	1" SAE 4-bolt flange Code 62
B =	ISO 228 G-1"

BOX 6

Bypass	
Omit	= 40 PSI Bypass
X	= Blocked bypass
50	= 50 psi bypass setting
(Omit Box 6 if RFN60 is used)	

BOX 7

Test Points	
L	= Two ¼" NPTF inlet and outlet female test ports
U	= Schroeder Check 7/16"-20 UNF Test Point installation in head (upstream)

BOX 8

Dirt Alarm® Options		
	Omit =	None
Visual	D5 =	Visual pop-up
Visual with Thermal Lockout	D8 =	Visual w/ thermal lockout
Electrical	MS5 =	Electrical w/ 12 in. 18 gauge 4-conductor cable
	MS5LC =	Low current MS5
	MS10 =	Electrical w/ DIN connector (male end only)
	MS10LC =	Low current MS10
	MS11 =	Electrical w/ 12 ft. 4-conductor wire
	MS12 =	Electrical w/ 5 pin Brad Harrison connector (male end only)
	MS12LC =	Low current MS12
	MS16 =	Electrical w/ weather-packed sealed connector
	MS16LC =	Low current MS16
	MS17LC =	Electrical w/ 4 pin Brad Harrison male connector
Electrical with Thermal Lockout	MS5T =	MS5 (see above) w/ thermal lockout
	MS5LCT =	Low current MS5T
	MS10T =	MS10 (see above) w/ thermal lockout
	MS10LCT =	Low current MS10T
	MS12T =	MS12 (see above) w/ thermal lockout
	MS12LCT =	Low current MS12T
	MS16T =	MS16 (see above) w/ thermal lockout
	MS16LCT =	Low current MS16T
	MS17LCT =	Low current MS17T
Electrical Visual	MS13DC =	Supplied w/ threaded connector & light
	MS14DC =	Supplied w/ 5 pin Brad Harrison connector & light (male end)
Electrical Visual with Thermal Lockout	MS13DCT =	MS13 (see above), direct current, w/ thermal lockout
	MS13DCLCT =	Low current MS13DCT
	MS14DCT =	MS14 (see above), direct current, w/ thermal lockout
	MS14DCLCT =	Low current MS14DCT

NOTES:

Box 2. Replacement element part numbers are a combination of Boxes 2, 3 and 4. Example: 8RZ1V synthetic media elements are only available with Viton seals.

Box 4. Viton® is a registered trademark of DuPont Dow Elastomers.

Box 5. B porting option supplied with metric mounting holes.

Box 6. When X is paired with a standard filter series, a standard bushing and spring plate will be used.

Box 8. Standard indicator setting for non-bypassing model is 50 psi unless otherwise noted.

Top-Ported Pressure Filter CF60

Model No. of filter in photograph is CF601CCZ3SD5.

Features and Benefits

- Top-ported high pressure filter
- Available with non-bypass option with high collapse element
- Offered in pipe, SAE straight thread, flange and ISO 228 porting
- No-Element indicator option available

50 gpm
190 L/min
6000 psi
415 bar

Filter Housing Specifications

Flow Rating:	Up to 50 gpm (190 L/min) for 150 SUS (32 cSt) fluids
Max. Operating Pressure:	6000 psi (415 bar)
Min. Yield Pressure:	15,500 psi (1070 bar), per NFPA T2.6.1
Rated Fatigue Pressure:	4000 psi (276 bar), per NFPA T2.6.1-R1-2005
Temp. Range:	-20°F to 225°F (-29°C to 107°C)
Bypass Setting:	Cracking: 40 psi (2.8 bar) Full Flow: 75 psi (5.2 bar) Non-bypassing model has a blocked bypass.
Porting Head: Element Case:	Ductile Iron Steel
Weight of CF60-9C:	24.0 lbs. (10.9 kg)
Element Change Clearance:	4.0" (103 mm)

Fluid Compatibility

Type Fluid	Appropriate Schroeder Media
Petroleum Based Fluids	All E-Media (cellulose), Z-Media® and ASP® Media (synthetic)
High Water Content	All Z-Media® and ASP® Media (synthetic)
Invert Emulsions	10 and 25 µ Z-Media® (synthetic) and 10 µ ASP® Media (synthetic)
Water Glycols	3, 5, 10 and 25 µ Z-Media® and all ASP® Media (synthetic)
Phosphate Esters	All Z-Media® and ASP® Media (synthetic) with H (EPR) seal designation
Skydrol®	3, 5, 10 and 25 µ Z-Media® and all ASP® Media (synthetic) with H.5 seal designation (EPR seals and stainless steel wire mesh in element, and light oil coating on housing exterior)

CF60 Top-Ported Pressure Filter

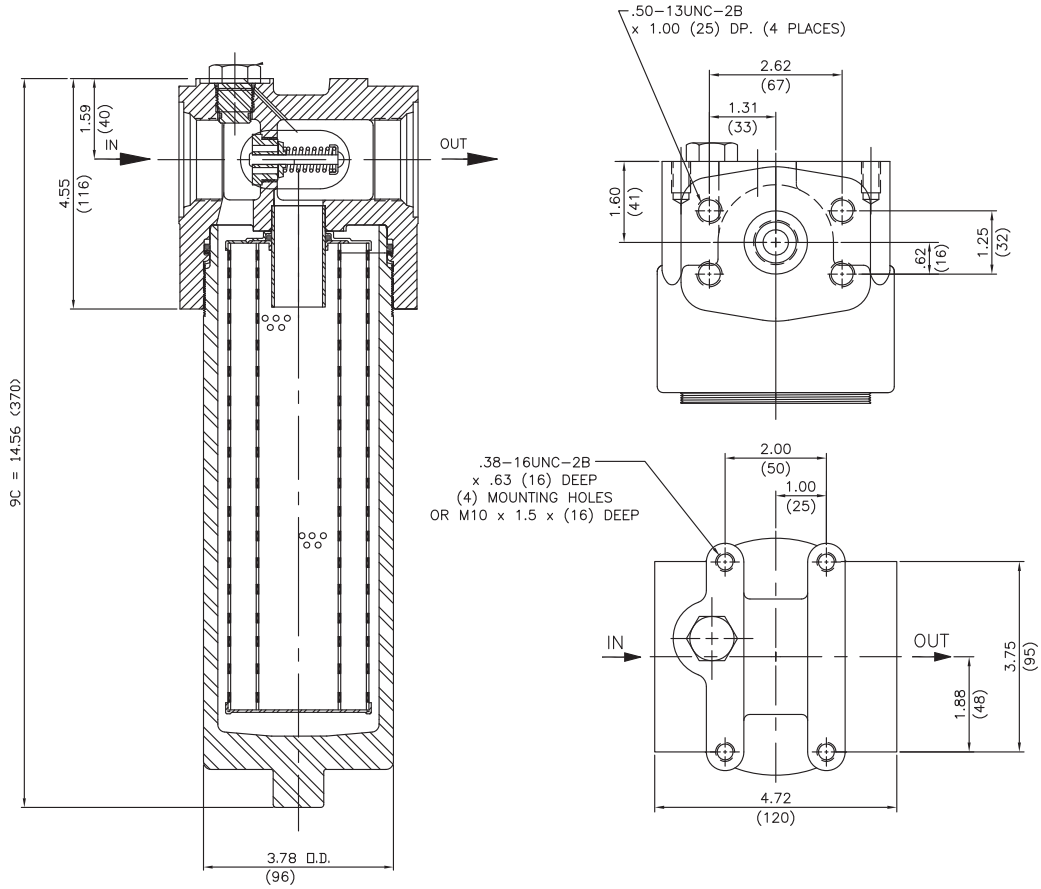

Metric dimensions in ( ).
Dimensions shown are inches (millimeters) for general information and overall envelope size only.
For complete dimensions please contact Schroeder Industries to request a certified print.

Element Performance Information & Dirt Holding Capacity

	Filtration Ratio Per ISO 4572/NFPA T3.10.8.8 Using automated particle counter (APC) calibrated per ISO 4402			Filtration Ratio per ISO 16889 Using APC calibrated per ISO 11171	
Element	$ß_x \geq 75$	$ß_x \geq 100$	$ß_x \geq 200$	$ß_x(c) \geq 200$	$ß_x(c) \geq 1000$
CCZ1	<1.0	<1.0	<1.0	<4.0	4.2
CCZ3	<1.0	<1.0	<2.0	<4.0	4.8
CCZ5	2.5	3.0	4.0	4.8	6.3
CCZ10	7.4	8.2	10.0	8.0	10.0
CCZ25	18.0	20.0	22.5	19.0	24.0
CCZX3	<1.0	<1.0	<2.0	4.7	5.8

Element	DHC (gm)
CCZ1	57
CCZ3	58
CCZ5	63
CCZ10	62
CCZ25	63
CCZX3	26*

Element Collapse Rating: 150 psid (10 bar) for standard elements
3000 psid (210 bar) for high collapse (ZX) versions

Flow Direction: Outside In

Element Nominal Dimensions: CC: 3.0" (75 mm) O.D. x 9.5" (240 mm) long

Pressure Drop Information

Based on Flow Rate and Viscosity

$\Delta P_{housing}$

CF60 $\Delta P_{housing}$ for fluids with sp gr (specific gravity) = 0.86:

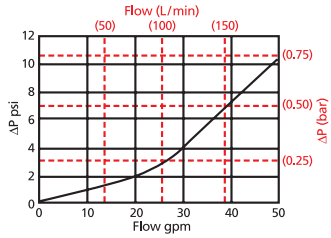

$\Delta P_{element}$

CCZ

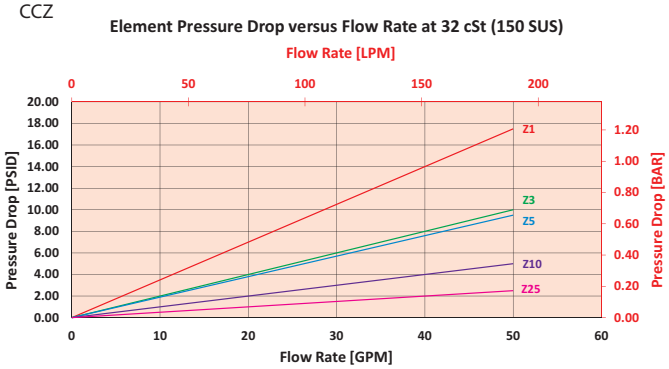

$$\Delta P_{filter} = \Delta P_{housing} + (\Delta P_{element} * V_f)$$

Exercise:

Determine ΔP_{filter} at 30 gpm (113.6 L/min) for CF601CCZ10SD5 using 175 SUS (37.2 cSt) fluid.

Use the housing pressure curve to determine $\Delta P_{housing}$ at 30 gpm. In this case, $\Delta P_{housing}$ is 4 psi (.28 bar) on the graph for the CF60 housing.

Use the element pressure curve to determine $\Delta P_{element}$ at 30 gpm. In this case, $\Delta P_{element}$ is 3 psi (.21 bar) according to the graph for the CCZ10 element.

Because the viscosity in this sample is 175 SUS (37.2 cSt), we determine the Viscosity Factor (V_f) by dividing the Operating Fluid Viscosity with the Standard Viscosity of 150 SUS (32 cSt). To best determine your Operating Fluid Viscosity, please reference the chart in Appendix D.

Finally, the overall filter pressure differential, ΔP_{filter}, is calculated by adding $\Delta P_{housing}$ with the true element pressure differential, ($\Delta P_{element} * V_f$). The $\Delta P_{element}$ from the graph has to be multiplied by the viscosity factor to get the true pressure differential across the element.

Solution:

$\Delta P_{housing}$ = 4 psi [.28 bar] | $\Delta P_{element}$ = 3 psi [.21 bar]

V_f = 175 SUS (37.2 cSt) / 150 SUS (32 cSt) = 1.2

ΔP_{filter} = 4 psi + (3 psi * 1.2) = 7.6 psi

OR

ΔP_{filter} = .28 bar + (.21 bar * 1.2) = .53 bar

Note:
If your element is not graphed, use the following equation:
$\Delta P_{element}$ = Flow Rate x $\Delta P_{f.}$ Plug this variable into the overall pressure drop equation.

Ele.	ΔP
CC3	0.22
CC10	0.13
CC25	0.03
CCAS3	0.20
CCAS5	0.19
CCAS10	0.10
CCZX3	0.29
CCZX10	0.26

CF60 Top-Ported Pressure Filter

Filter Model Number Selection

How to Build a Valid Model Number for a Schroeder CF60:

BOX 1	BOX 2	BOX 3	BOX 4	BOX 5	BOX 6	BOX 7	BOX 8	BOX 9
CF60 –	–	–	–	–	–	–	–	–

BOX 1	BOX 2	BOX 3	BOX 4	BOX 5	BOX 6	BOX 7	BOX 8	BOX 9	
CF60 –	1CC –	Z –	10 –	–	S –	–	D5 –	–	= CF601CCZ10SD5

BOX 1

Filter Series
CF60
CFN60 (Non-bypassing: requires ZX high collapse elements)

BOX 2

Number and Size of Elements
1CC

BOX 3

Media Type	
Omit	E Media (cellulose)
Z	= Excellement® Z-Media® (synthetic)
ZX	= Excellement® Z- Media® (high collapse center tube)
AS	= Anti-Stat Media (synthetic)

BOX 4

Micron Rating		
1	= 1 Micron	(Z media)
3	= 3 Micron	(AS,E, Z and ZX media)
5	= 5 Micron	(AS, Z, and ZX media)
10	= 10 Micron	(AS,E, Z, and ZX media)
25	= 25 Micron	(E, Z and ZX media)

BOX 5

Seal Material	
Omit	= Buna N
V	= Viton®
H	= EPR
H.5	= Skydrol® compatibility

BOX 6

Porting	
S =	SAE-20
P =	1¼" NPTF
F =	1¼" SAE 4-bolt flange code 62
B =	ISO 228 G-1¼"

BOX 7

Bypass
Omit = 40 PSI Bypass
X = Blocked Bypass
30 = 30 psi bypass setting
50 = 50 psi bypass setting
(Omit box 7 if a CFN60 is selected)

BOX 8

Dirt Alarm® Options		
	Omit =	None
Visual	D5 =	Visual pop-up
Visual with Thermal Lockout	D8 =	Visual w/ thermal lockout
Electrical	MS5 =	Electrical w/ 12 in. 18 gauge 4-conductor cable
	MS5LC =	Low current MS5
	MS10 =	Electrical w/ DIN connector (male end only)
	MS10LC =	Low current MS10
	MS11 =	Electrical w/ 12 ft. 4-conductor wire
	MS12 =	Electrical w/ 5 pin Brad Harrison connector (male end only)
	MS12LC =	Low current MS12
	MS16 =	Electrical w/ weather-packed sealed connector
	MS16LC =	Low current MS16
	MS17LC =	Electrical w/ 4 pin Brad Harrison male connector
Electrical with Thermal Lockout	MS5T =	MS5 (see above) w/ thermal lockout
	MS5LCT =	Low current MS5T
	MS10T =	MS10 (see above) w/ thermal lockout
	MS10LCT =	Low current MS10T
	MS12T =	MS12 (see above) w/ thermal lockout
	MS12LCT =	Low current MS12T
	MS16T =	MS16 (see above) w/ thermal lockout
	MS16LCT =	Low current MS16T
	MS17LCT =	Low current MS17T
Electrical Visual	MS13 =	Supplied w/ threaded connector & light
	MS14 =	Supplied w/ 5 pin Brad Harrison connector & light (male end)
Electrical Visual with Thermal Lockout	MS13DCT =	MS13 (see above), direct current, w/ thermal lockout
	MS13DCLCT =	Low current MS13DCT
	MS14DCT =	MS14 (see above), direct current, w/ thermal lockout
	MS14DCLCT =	Low current MS14DCT

NOTES:

Box 2. Replacement element part numbers are identical to contents of Boxes 2, 3, 4 and 5. E media (cellulose) elements are only available with Buna N seals.

Box 5. H.5 seal designation includes the following: EPR seals, stainless steel wire mesh on elements, and light oil coating on housing exterior. Viton® is a registered trademark of DuPont Dow Elastomers. Skydrol® is a registered trademark of Solutia Inc.

Box 6. B porting option supplied with metric mounting holes.

Box 7. When X is paired with a standard filter series, a standard bushing and spring plate will be used.

Box 8. Standard indicator setting for non-bypassing model is 50 psi unless otherwise specified.

Top-Ported Pressure Filter CTF60

Model No. of filter in photograph is CTF608CTZ10F20D9.

Features and Benefits

- Top-ported high pressure filter
- High cyclic fatigue performance (6000 psi)
- Available with non-bypass option with high collapse element
- Offered in pipe, SAE straight thread, flange and ISO 228 porting
- Thread on bowl with optional drain plug for easy element service

75 gpm
284 L/min
6000 psi
415 bar

Filter Housing Specifications

Flow Rating:	Up to 75 gpm (284 L/min) for 150 SUS (32 cSt) fluids
Max. Operating Pressure:	6000 psi (415 bar)
Min. Yield Pressure:	18,000 psi (1241 bar), per NFPA T2.6.1
Rated Fatigue Pressure:	6000 psi (415 bar), per NFPA T2.6.1-R1-2005 (only with F20 4-bolt flange porting)
Temp. Range:	-20°F to 225°F (-29°C to 107°C)
Bypass Setting:	Cracking: 50 psi (3.4 bar) Full Flow: 83 psi (5.7 bar) Non-bypassing model has a blocked bypass.
Porting Head: Element Case:	Ductile Iron Steel
Weight of CTF60-5CT: CTF60-8CT: CTF60-14CT:	25 lbs. (11.4 kg) 29 lbs. (13.2 kg) 38 lbs. (17.3 kg)
Element Change Clearance:	4.0" (103 mm)

Fluid Compatibility

Type Fluid	Appropriate Schroeder Media
High Water Content	All Z-Media® (synthetic)
Invert Emulsions	10 and 25 µ Z-Media® (synthetic)
Water Glycols	3, 5, 10 and 25 µ Z-Media® (synthetic)
Phosphate Esters	All Z-Media® (synthetic) with H (EPR) seal designation

CTF60 Top-Ported Pressure Filter

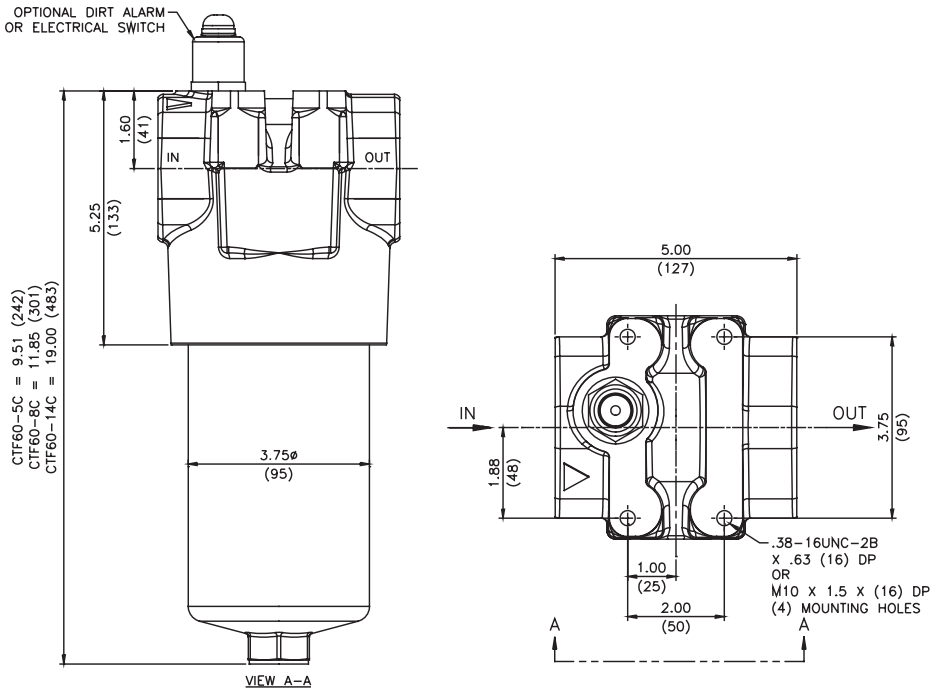

Metric dimensions in ( ).
Dimensions shown are inches (millimeters) for general information and overall envelope size only.
For complete dimensions please contact Schroeder Industries to request a certified print.

Element Performance Information & Dirt Holding Capacity

	Filtration Ratio Per ISO 4572/NFPA T3.10.8.8 Using automated particle counter (APC) calibrated per ISO 4402			Filtration Ratio per ISO 16889 Using APC calibrated per ISO 11171	
Element	$ß_x \geq 75$	$ß_x \geq 100$	$ß_x \geq 200$	$ß_x(c) \geq 200$	$ß_x(c) \geq 1000$
CTZ1/CTZX1	<1.0	<1.0	<1.0	<4.0	4.2
CTZ3/CTZX3	<1.0	<1.0	<2.0	<4.0	4.8
CTZ5/CTZX5	2.5	3.0	4.0	4.8	6.3
CTZ10/CTZX10	7.4	8.2	10.0	8.0	10.0
CTZ25/CTZX25	18.0	20.0	22.5	19.0	24.0

Element	DHC (gm)	Element	DHC (gm)	Element	DHC (gm)
5CTZ1	19	8CTZ1	31	14CTZ1	66
5CTZ3	16	8CTZ3	27	14CTZ3	57
5CTZ5	18	8CTZ5	30	14CTZ5	64
5CTZ10	21	8CTZ10	34	14CTZ10	72
5CTZ25	17	8CTZ25	28	14CTZ25	60
5CTZX1	14	8CTZX1	24	14CTZX1	53
5CTZX3	11	8CTZX3	18	14CTZX3	41
5CTZX5	10	8CTZX5	17	14CTZX5	38
5CTZX10	12	8CTZX10	20	14CTZX10	44
5CTZX25	11	8CTZX25	18	14CTZX25	39

Element Collapse Rating: 150 psid (10 bar) for standard elements
3000 psid (210 bar) for high collapse (ZX) versions

Flow Direction: Outside In

Element Nominal Dimensions: 5CT : 2.64" (67 mm) O.D. x 4.88" (124 mm) long
8CT : 2.64" (67 mm) O.D. x 7.25" (184 mm) long
14CT : 2.64" (67 mm) O.D. x 14.38" (365 mm) long

Pressure Drop Information

Based on Flow Rate and Viscosity

$\Delta P_{housing}$

CTF60 $\Delta P_{housing}$ for fluids with sp gr (specific gravity) = 0.86:

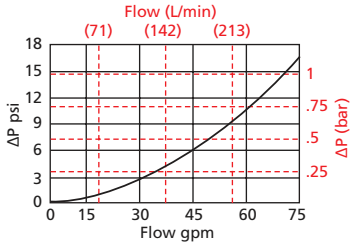

$\Delta P_{element}$

8CTZ

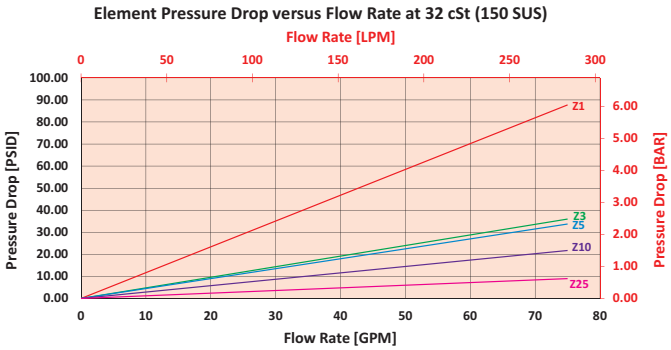

14CTZ

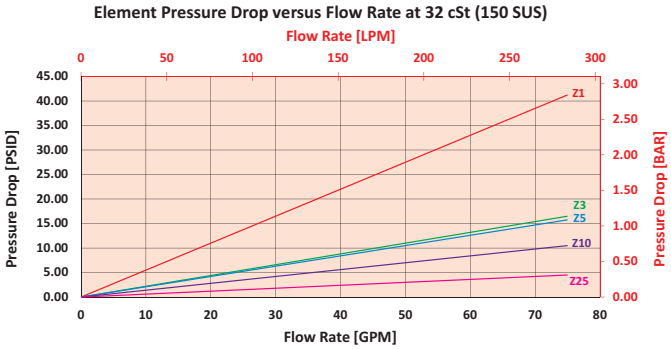

$$\Delta P_{filter} = \Delta P_{housing} + (\Delta P_{element} * V_f)$$

Exercise:

Determine ΔP_{filter} at 50 gpm (189 L/min) for CTF608CTZ5S20D9 using 200 SUS (42.6 cSt) fluid.

Use the housing pressure curve to determine $\Delta P_{housing}$ at 50 gpm. In this case, $\Delta P_{housing}$ is 7 psi (.48 bar) on the graph for the CTF60 housing.

Use the element pressure curve to determine $\Delta P_{element}$ at 50 gpm. In this case, $\Delta P_{element}$ is 22 psi (1.5 bar) according to the graph for the 8CTZ5 element.

Because the viscosity in this sample is 200 SUS (42.6 cSt), we determine the Viscosity Factor (V_f) by dividing the Operating Fluid Viscosity with the Standard Viscosity of 150 SUS (32 cSt). To best determine your Operating Fluid Viscosity, please reference the chart in Appendix D.

Finally, the overall filter pressure differential, ΔP_{filter}, is calculated by adding $\Delta P_{housing}$ with the true element pressure differential, ($\Delta P_{element} * V_f$). The $\Delta P_{element}$ from the graph has to be multiplied by the viscosity factor to get the true pressure differential across the element.

Solution:

$\Delta P_{housing}$ = 7 psi [.48 bar] | $\Delta P_{element}$ = 22 psi [1.5 bar]

V_f = 200 SUS (42.6 cSt) / 150 SUS (32 cSt) = 1.3

ΔP_{filter} = 7 psi + (22 psi * 1.3) = 35.6 psi

OR

ΔP_{filter} = .48 bar + (1.5 bar * 1.3) = 2.4 bar

Note:
If your element is not graphed, use the following equation:
$\Delta P_{element}$ = Flow Rate x $\Delta P_{f.}$ Plug this variable into the overall pressure drop equation.

Ele.	ΔP	Ele.	ΔP	Ele.	ΔP
5CTZ1	1.87	5CTZX1	1.64	8CTZX1	1.00
5CTZ3	0.77	5CTZX3	0.96	8CTZX3	0.59
5CTZ5	0.72	5CTZX5	0.68	8CTZX5	0.41
5CTZ10	0.46	5CTZX10	0.46	8CTZX10	0.28
5CTZ25	0.19	5CTZX25	0.25	8CTZX25	0.15
14CTZX1	0.46	14CTZX3	0.27	14CTZX5	0.19
14CTZX10	0.13	14CTZX25	0.07		

CTF60 Top-Ported Pressure Filter

Filter Model Number Selection

How to Build a Valid Model Number for a Schroeder CTF60:

BOX 1	BOX 2	BOX 3	BOX 4	BOX 5	BOX 6	BOX 7	BOX 8
CTF60 –	–	–	–	–	–	–	–

BOX 1	BOX 2	BOX 3	BOX 4	BOX 5	BOX 6	BOX 7	BOX 8	
CTF60 –	8 –	CTZ5 –	–	S20 –	–	–	D9	= CTF608CTZ5S20D9

BOX 1

Filter Series
CTF60
CTFN60 (Non-bypassing: requires ZX high collapse elements)

BOX 2

Element Length (in.)
5
8
14

BOX 3

Element Part Number	
CTZ1	= 1 µ Excellement® Z-Media® (synthetic)
CTZ3	= 3 µ Excellement® Z-Media® (synthetic)
CTZ5	= 5 µ Excellement® Z-Media® (synthetic)
CTZ10	= 10 µ Excellement® Z-Media® (synthetic)
CTZ25	= 25 µ Excellement® Z-Media® (synthetic)
CTZX1	= 1 µ Excellement® Z-Media® (high collapse center tube)
CTZX3	= 3 µ Excellement® Z-Media® (high collapse center tube)
CTZX5	= 5 µ Excellement® Z-Media® (high collapse center tube)
CTZX10	= 10 µ Excellement® Z-Media® (high collapse center tube)
CTZX25	= 25 µ Excellement® Z-Media® (high collapse center tube)

BOX 4

Seal Material	
Omit	= Buna N
V	= Viton®
H	= EPR

BOX 5

Inlet Port	
P20	= 1¼" NPTF
S20	= SAE-20
F20	= 1¼" SAE 4-bolt flange Code 62
B20	= ISO 228 G-1¼"

BOX 6

Bypass	
Omit	= 50 PSI Bypass
(Omit Box 6 if a CTFN60 is selected)	

BOX 7

Options	
UU	Series 1215 7/16" UNF Schroeder Check Test Points installed in the filter head (upstream & downstream)
DR = Drain on bowl	

BOX 8

Dirt Alarm® Options		
	Omit =	None
Visual	D9 =	Visual pop-up
Electrical	MS5SS =	Electrical w/ 12 in. 18 gauge 4-conductor cable
	MS5SSLC =	Low current MS5
	MS10SS =	Electrical w/ DIN connector (male end only)
	MS10SSLC =	Low current MS10
	MS11SS =	Electrical w/ 12 ft. 4-conductor wire
	MS12SS=	Electrical w/ 5 pin Brad Harrison connector (male end only)
	MS12SSLC =	Low current MS12
	MS16SS =	Electrical w/ weather-packed sealed connector
	MS16SSLC =	Low current MS16
	MS17SSLC =	Electrical w/ 4 pin Brad Harrison male connector
Electrical with Thermal Lockout	MS5SST =	MS5 (see above) w/ thermal lockout
	MS5SSLCT =	Low current MS5T
	MS10SST =	MS10 (see above) w/ thermal lockout
	MS10SSLCT =	Low current MS10T
	MS12SST =	MS12 (see above) w/ thermal lockout
	MS12SSLCT =	Low current MS12T
	MS16SST =	MS16 (see above) w/ thermal lockout
	MS16SSLCT =	Low current MS16T
	MS17SSLCT =	Low current MS17T
Electrical Visual	MS13DC =	Supplied w/ threaded connector & light
	MS14DC =	Supplied w/ 5 pin Brad Harrison connector & light (male end)
Electrical Visual with Thermal Lockout	MS13SSDCT =	MS13 (see above), direct current, w/ thermal lockout
	MS13SSDCLCT =	Low current MS13DCT
	MS14SSDCT =	MS14 (see above), direct current, w/ thermal lockout
	MS14SSDCLCT =	Low current MS14DCT

NOTES:

Box 2. Replacement element part numbers are identical to contents of Boxes 2, 3 and 4.

Box 4. Viton® is a registered trademark of DuPont Dow Elastomers.

Box 5. B porting option supplied with metric mounting holes.

Box 8. All Dirt Alarm® Indicators must be Stainless Steel. Standard indicator setting is 50 psi. For replacement indicators, contact the factory.

Top-Ported Pressure Filter VF60

Model No. of filter in photograph is VF609VZ10SD5.

Features and Benefits

- Top-ported high pressure filter
- Threaded bowl for easy element servicing
- Offered in pipe, SAE straight thread and ISO 228 porting
- Various dirt alarm options available

70 gpm
265 L/min
6000 psi
415 bar

Filter Housing Specifications

Flow Rating:	Up to 70 gpm (265 L/min) for 150 SUS (32 cSt) fluids
Max. Operating Pressure:	6000 psi (415 bar)
Min. Yield Pressure:	15,500 psi (1070 bar), per NFPA T2.6.1
Rated Fatigue Pressure:	3300 psi (230 bar), per NFPA T2.6.1-R1-2005
Temp. Range:	-20°F to 225°F (-29°C to 107°C)
Bypass Setting:	Cracking: 50 psi (3.5 bar) Full Flow: 65 psi (4.5 bar)
Porting Head: Element Case:	Ductile Iron Steel
Weight of VF60-9V:	24.0 lbs. (10.9 kg)
Element Change Clearance:	4.0" (103 mm)

Fluid Compatibility

Type Fluid	Appropriate Schroeder Media
Petroleum Based Fluids	All E-Media (cellulose) and Z-Media® (synthetic)
High Water Content	All Z-Media® (synthetic)
Invert Emulsions	10 and 25 µ Z-Media® (synthetic)
Water Glycols	3, 5, 10 and 25 µ Z-Media® (synthetic)
Phosphate Esters	All Z-Media® (synthetic) with H (EPR) seal designation
Skydrol®	3, 5, 10 and 25 µ Z-Media® (synthetic) with H.5 seal designation (EPR seals and stainless steel wire mesh in element, and light oil coating on housing exterior)

VF60 Top-Ported Pressure Filter

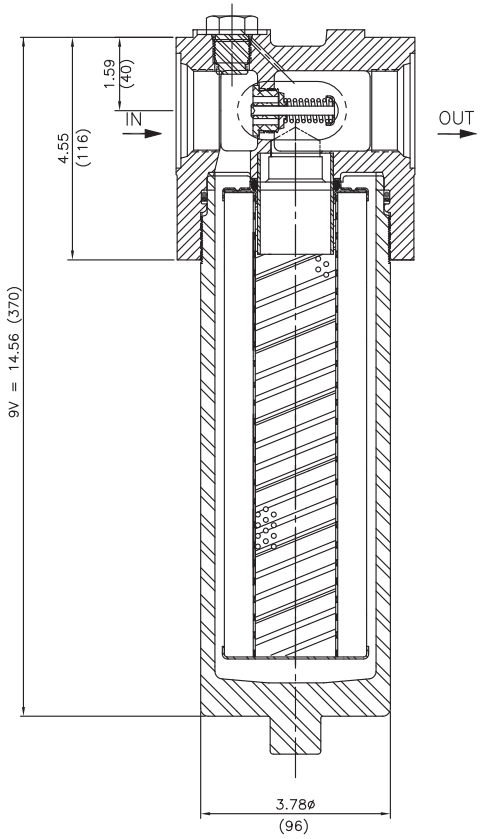

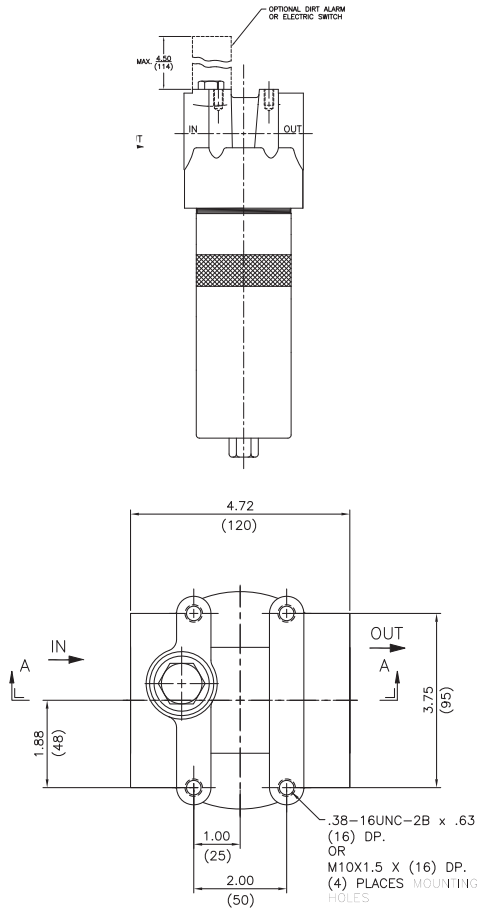

Metric dimensions in ( ).
Dimensions shown are inches (millimeters) for general information and overall envelope size only.
For complete dimensions please contact Schroeder Industries to request a certified print.

Element Performance Information & Dirt Holding Capacity

	Filtration Ratio Per ISO 4572/NFPA T3.10.8.8 Using automated particle counter (APC) calibrated per ISO 4402			Filtration Ratio per ISO 16889 Using APC calibrated per ISO 11171	
Element	$ß_x \geq 75$	$ß_x \geq 100$	$ß_x \geq 200$	$ß_x(c) \geq 200$	$ß_x(c) \geq 1000$
9VZ1	<1.0	<1.0	<1.0	<4.0	4.2
9VZ3	<1.0	<1.0	<2.0	<4.0	4.8
9VZ5	2.5	3.0	4.0	4.8	6.3
9VZ10	7.4	8.2	10.0	8.0	10.0
9VZ25	18.0	20.0	22.5	19.0	24.0

Element	DHC (gm)
9VZ1	55
9VZ3	57
9VZ5	62
9VZ10	60
9VZ25	61

Element Collapse Rating: 150 psid (10 bar) for standard elements

Flow Direction: Outside In

Element Nominal Dimensions: 9V: 2.9" (75 mm) O.D. x 9.5" (240 mm) long

Pressure Drop Information

Based on Flow Rate and Viscosity

$\Delta P_{housing}$

VF60 $\Delta P_{housing}$ for fluids with sp gr (specific gravity) = 0.86:

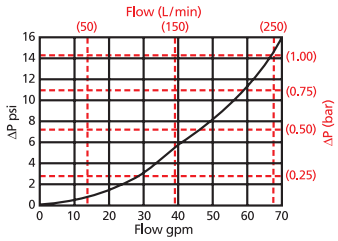

$\Delta P_{element}$

9VZ

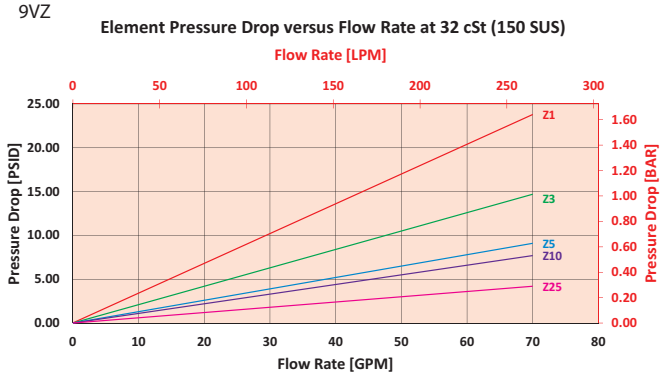

$$\Delta P_{filter} = \Delta P_{housing} + (\Delta P_{element} * V_f)$$

Exercise:

Determine ΔP_{filter} at 40 gpm (151 L/min) for VF609VZ1S using 120 SUS (25.5 cSt) fluid.

Use the housing pressure curve to determine $\Delta P_{housing}$ at 40 gpm. In this case, $\Delta P_{housing}$ is 6 psi (.42 bar) on the graph for the VF60 housing.

Use the element pressure curve to determine $\Delta P_{element}$ at 40 gpm. In this case, $\Delta P_{element}$ is 13 psi (.90 bar) according to the graph for the 9VZ1 element.

Because the viscosity in this sample is 120 SUS (25.5 cSt), we determine the Viscosity Factor (V_f) by dividing the Operating Fluid Viscosity with the Standard Viscosity of 150 SUS (32 cSt). To best determine your Operating Fluid Viscosity, please reference the chart in Appendix D.

Finally, the overall filter pressure differential, ΔP_{filter}, is calculated by adding $\Delta P_{housing}$ with the true element pressure differential, ($\Delta P_{element} * V_f$). The $\Delta P_{element}$ from the graph has to be multiplied by the viscosity factor to get the true pressure differential across the element.

Solution:

$\Delta P_{housing}$ = 6 psi [.42 bar] | $\Delta P_{element}$ = 13 psi [.90 bar]

V_f = 120 SUS (25.5 cSt) / 150 SUS (32 cSt) = .80

ΔP_{filter} = 6 psi + (13 psi * .80) = 16.4 psi

OR

ΔP_{filter} = .42 bar + (..90 bar * .80) = 1.14 bar

Note:
If your element is not graphed, use the following equation:
$\Delta P_{element}$ = Flow Rate x $\Delta P_{f.}$ Plug this variable into the overall pressure drop equation.

Ele.	ΔP
9V3	0.32
9V10	0.24

VF60 Top-Ported Pressure Filter

Filter Model Number Selection

How to Build a Valid Model Number for a Schroeder VF60:

BOX 1	BOX 2	BOX 3	BOX 4	BOX 5	BOX 6	BOX 7
VF60 –	–	–	–	–	–	–

BOX 1	BOX 2	BOX 3	BOX 4	BOX 5	BOX 6	BOX 7	
VF60 –	9 –	VZ1 –	–	S –	–	–	= VF609VZ1S

BOX 1

Filter Series
VF60

BOX 2

Element Length (in)
9

BOX 3

Element Size and Media
V3 = V size 3 µ E media (cellulose)
V10 = V size 10 µ E media (cellulose)
VZ1 = V size 1 µ Excellement® Z-Media® (synthetic)
VZ3 = V size 3 µ Excellement® Z-Media® (synthetic)
VZ5 = V size 5 µ Excellement® Z-Media® (synthetic)
VZ10 = V size 10 µ Excellement® Z-Media® (synthetic)
VZ25 = V size 25 µ Excellement® Z-Media® (synthetic)
VM150 = V size 150 µ M media (reusable metal)

BOX 4

Seal Material
Omit = Buna N
V = Viton®
H = EPR

BOX 5

Inlet Port
P = 1¼" NPTF
S = SAE-20
B = ISO 228 G-1¼"

BOX 6

Bypass
Omit = 50 PSI bypass
40 = 40 PSI bypass

BOX 7

Dirt Alarm® Options		
	Omit =	None
Visual	D5 =	Visual pop-up
Visual with Thermal Lockout	D8 =	Visual w/ thermal lockout
Electrical	MS5 =	Electrical w/ 12 in. 18 gauge 4-conductor cable
	MS5LC =	Low current MS5
	MS10 =	Electrical w/ DIN connector (male end only)
	MS10LC =	Low current MS10
	MS11 =	Electrical w/ 12 ft. 4-conductor wire
	MS12 =	Electrical w/ 5 pin Brad Harrison connector (male end only)
	MS12LC =	Low current MS12
	MS16 =	Electrical w/ weather-packed sealed connector
	MS16LC =	Low current MS16
	MS17LC =	Electrical w/ 4 pin Brad Harrison male connector
Electrical with Thermal Lockout	MS5T =	MS5 (see above) w/ thermal lockout
	MS5LCT =	Low current MS5T
	MS10T =	MS10 (see above) w/ thermal lockout
	MS10LCT =	Low current MS10T
	MS12T =	MS12 (see above) w/ thermal lockout
	MS12LCT =	Low current MS12T
	MS16T =	MS16 (see above) w/ thermal lockout
	MS16LCT =	Low current MS16T
	MS17LCT =	Low current MS17T
Electrical Visual	MS13DC =	Supplied w/ threaded connector & light
	MS14DC =	Supplied w/ 5 pin Brad Harrison connector & light (male end)
Electrical Visual with Thermal Lockout	MS13DCT =	MS13 (see above), direct current, w/ thermal lockout
	MS13DCLCT =	Low current MS13DCT
	MS14DCT =	MS14 (see above), direct current, w/ thermal lockout
	MS14DCLCT =	Low current MS14DCT

NOTES:

Box 2. Replacement element part numbers are a combination of Boxes 2, 3, and 4.

Box 2. Example: 9VZ1V synthetic media elements are only available with Viton seals.

Box 4. Viton® is a registered trademark of DuPont Dow Elastomers.

Box 5. B porting option supplied with metric mounting holes.

High-Flow, High Pressure Filter LW60

Features and Benefits

- Horizontal alignment allows straight-through flow, maximizing efficiency and minimizing pressure drop
- Propriety synthetic media designed specifically for the mining industry. Excellement-MD™ provides level of filtration not achievable using alternative wire mesh elements because of their lack of absolute ratings
- Two-inch BSPP ports are easily adaptable to Super Stecko fittings commonly used underground
- Stainless steel bypass valve that ensures smooth integration with 95/5 fluid
- Non-bypassing version available with high crush (4500 psid) cleanable metal mesh (25 micron) element

300 gpm
1135 L/min
6000 psi
415 bar

Model No. of filter in photograph is LW6039ZPZ5VB32DPG.

Filter Housing Specifications

Flow Rating:	Up to 300 gpm (1135 L/min) for use with 95/5 fluids
Max. Operating Pressure:	6000 psi (414 bar)
Min. Yield Pressure:	18,000 psi (1240 bar), per NFPA T2.6.1
Rated Fatigue Pressure:	4500 psi (310 bar), per NFPA T2.6.1
Temp. Range:	-20°F to 225°F (-29°C to 107°C)
Bypass Setting:	Cracking: 50 psi (3.4 bar) LWN60 non-bypassing model available with high crush element
Porting Cap: Housing:	Steel Steel
Weight:	550 lb. (250 kg)
Element Change Clearance:	34.0" (864 mm)

Fluid Compatibility

Type Fluid	Appropriate Schroeder Media
95/5 fluids	Specifically designed for use with 95/5 fluids applications

High-Flow, High Pressure Filter

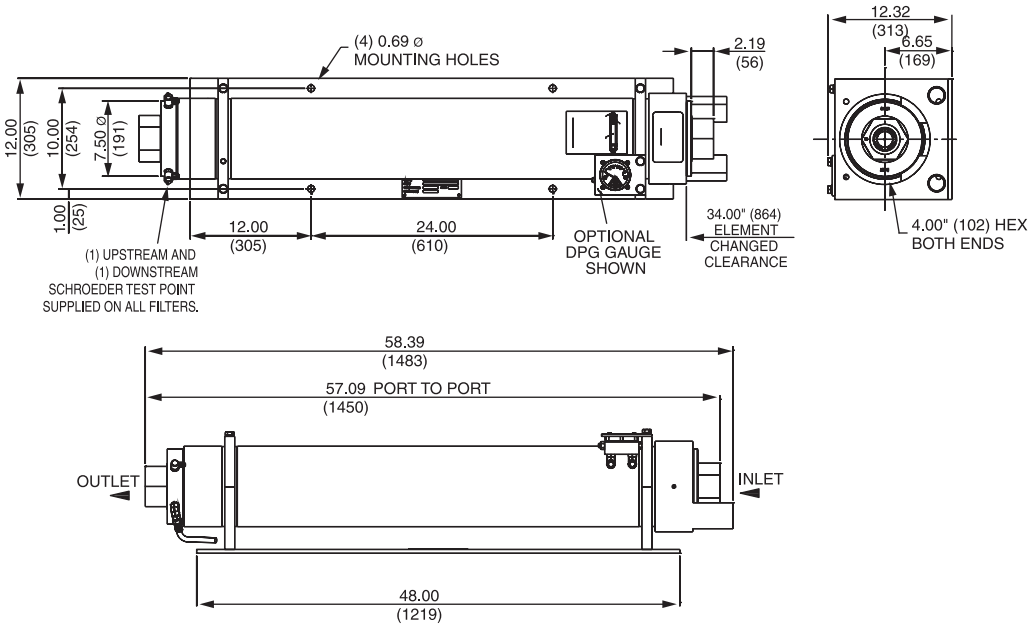

Metric dimensions in ( ).
Dimensions shown are inches (millimeters) for general information and overall envelope size only.
For complete dimensions please contact Schroeder Industries to request a certified print.

Element Performance Information & Dirt Holding Capacity

Element	Filtration Ratio per ISO 16889 Using APC calibrated per ISO 11171 $ß_x(c) \geq 1000$
39ZPZ3V	5.1
39ZPZ5V	6.1
39ZPZ10V	12.1
39ZPZ25V	17.7

Element	DHC (gm)
39ZPZ3V	449
39ZPZ5V	359
39ZPZ10V	429
39ZPZ25V	284

Element Collapse Rating:	150 psid (10 bar)
Flow Direction:	Outside In
Element Nominal Dimensions:	5.0" (127 mm) O.D. x 38.0" (965 mm) long

Pressure Drop Information
Based on Flow Rate and Viscosity

$\Delta P_{housing}$

LW60 $\Delta P_{housing}$ for fluids with sp gr (specific gravity) = 0.86:

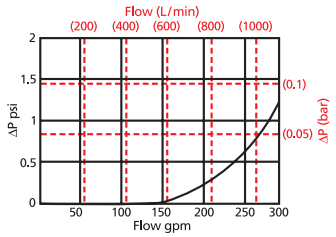

$\Delta P_{element}$

39ZPZ

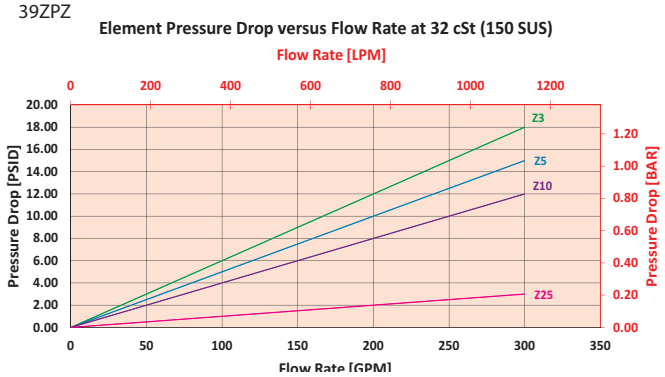

$$\Delta P_{filter} = \Delta P_{housing} + (\Delta P_{element} * V_f)$$

Exercise:

Determine ΔP_{filter} at 200 gpm (757 L/min) for LW6039ZPZ3VB32DPG using 75 SUS (16 cSt) fluid.

Use the housing pressure curve to determine $\Delta P_{housing}$ at 200 gpm. In this case, $\Delta P_{housing}$ is .25 psi (.02 bar) on the graph for the LW60 housing.

Use the element pressure curve to determine $\Delta P_{element}$ at 200 gpm. In this case, $\Delta P_{element}$ is 12 psi (.83 bar) according to the graph for the 39ZPZ3 element.

Because the viscosity in this sample is 75 SUS (16 cSt), we determine the Viscosity Factor (V_f) by dividing the Operating Fluid Viscosity with the Standard Viscosity of 150 SUS (32 cSt). To best determine your Operating Fluid Viscosity, please reference the chart in Appendix D.

Finally, the overall filter pressure differential, ΔP_{filter}, is calculated by adding $\Delta P_{housing}$ with the true element pressure differential, ($\Delta P_{element} * V_f$). The $\Delta P_{element}$ from the graph has to be multiplied by the viscosity factor to get the true pressure differential across the element.

Solution:

$\Delta P_{housing}$ = .25 psi [.02 bar] | $\Delta P_{element}$ = 12 psi [.83 bar]

V_f = 75 SUS (16 cSt) / 150 SUS (32 cSt) = .50

ΔP_{filter} = .25 psi + (12 psi * .50) = 6.25 psi

OR

ΔP_{filter} = .02 bar + (.83 bar * .50) = .44 bar

High-Flow, High Pressure Filter

Filter Model Number Selection

How to Build a Valid Model Number for a Schroeder LW60:

BOX 1		BOX 2		BOX 3		BOX 4		BOX 5
LW60	–		–		–		–	

BOX 1		BOX 2		BOX 3		BOX 4		BOX 5	
LW60	–	39ZPZ3V	–	B32	–		–	DPG	= LW6039ZPZ3VB32DPG

BOX 1

Filter Series
LW60

BOX 2

Element Part Number
39ZPZ3V = 3 µ Excellement® Z-Media® (synthetic)
39ZPZ5V = 5 µ Excellement® Z-Media® (synthetic)
39ZPZ10V = 10 µ Excellement® Z-Media® (synthetic)
39ZPZ25V = 25 µ Excellement® Z-Media® (synthetic)

BOX 3

Porting
B32 = ISO 228 G-2" (2-11 BSPP)

BOX 4

Bypass Settings
Omit = 50 psi cracking
30 = 30 psi cracking

BOX 5

Dirt Alarm® Options
DPG = Differential pressure gauge

How to Build a Valid Model Number for a Schroeder LWN60:

BOX 1		BOX 2		BOX 3		BOX 4		BOX 5
LWN60	–		–		–		–	

BOX 1		BOX 2		BOX 3		BOX 4		BOX 5	
LWN60	–	39ZPMX25V	–	B32	–		–	DPG	= LW6039ZMX25VB32DPG

BOX 1

Filter Series
LWN60 (Non-bypassing: requires MX high collapse elements)

BOX 2

Element Part Number
39ZPMX25V = 25 µ Excellement® Z-Media® (high collapse center tube)

BOX 3

Porting
B32 = ISO 228 G-2" (2-11 BSPP)

BOX 4

Bypass Settings
Omit = Blocked

BOX 5

Dirt Alarm® Options
DPG = Differential pressure gauge

Base-Ported Pressure Filter

KF30/KF50

Model No. of filter in photograph is KF30/KF501K10SD.

Features and Benefits

- Base-ported pressure filter
- Can be installed in vertical or horizontal position
- Meets HF4 automotive standard
- Element changeout from top minimizes oil spillage
- Offered in pipe, SAE straight thread, flanged and ISO 228 porting
- No-Element indicator option available
- Available with non-bypass option with high collapse element
- Integral inlet and outlet female test points option available
- Offered in conventional subplate porting
- Same day shipment model available
- Double and triple stacking of K-size elements can be replaced by single KK or 27K-size elements
- G Available with quality-protected GeoSeal® Elements (GKF30/GKF50)

100/150 gpm
380/570 L/min
KF30- 3000 psi
210 bar
KF50- 5000 psi
345 bar

Filter Housing Specifications

Flow Rating:	Up to 100 gpm (380 L/min) for 150 SUS (32 cSt) fluids With 2" porting only, up to 150 gpm (570 L/min) for 150 SUS (32 cSt) fluids
Max. Operating Pressure:	KF30- 3000 psi (210 bar) KF50- 5000 psi (345 bar)
Min. Yield Pressure:	KF30- 12,000 psi (830 bar), per NFPA T2.6.1 KF50- 15,000 psi (1025 bar), per NFPA T2.6.1
Rated Fatigue Pressure:	KF30- 2500 psi (170 bar), per NFPA T2.6.1-2005 KF50- 3500 psi (240 bar), per NFPA T2.6.1-2005
Temp. Range:	-20°F to 225°F (-29°C to 107°C)
Bypass Setting:	Cracking: 40 psi (2.8 bar) Full Flow: 61 psi (4.2 bar) Non-bypassing model has a blocked bypass.
Porting Base & Cap: Element Case:	Ductile Iron Steel
Weight of KF30-1K: Weight of KF30-2K: Weight of KF30-3K: Weight of KF50-1K: Weight of KF50-2K: Weight of KF50-3K:	48 lbs. (22 kg) 65 lbs. (30 kg) 81 lbs. (37 kg) 59.7 lbs. (27.1 kg) 80.7 lbs. (36.6 kg) 102.0 lbs. (46.3 kg)
Element Change Clearance:	8.50" (215 mm) for 1K; 17.50" (445 mm) for KK; 26.5" (673 mm) for 27K

Fluid Compatibility

Type Fluid	Appropriate Schroeder Media
Petroleum Based Fluids	All E media (cellulose), Z-Media® and ASP® Media (synthetic)
High Water Content	All Z-Media® and ASP® Media (synthetic)
Invert Emulsions	10 and 25 µ Z-Media® (synthetic), 10 µ ASP® Media
Water Glycols	3, 5, 10 and 25 µ Z-Media® (synthetic) and all ASP® Media
Phosphate Esters	All Z-Media® and ASP® Media (synthetic) with H (EPR) seal designation and 3 and 10 µ E media (cellulose) with H (EPR) seal designation
Skydrol®	3, 5, 10 and 25 µ Z-Media® (synthetic) and all ASP® Media (synthetic) with H.5 seal designation (EPR seals and stainless steel wire mesh in element, and light oil coating on housing exterior)

KF30/KF50 Base-Ported Pressure Filter

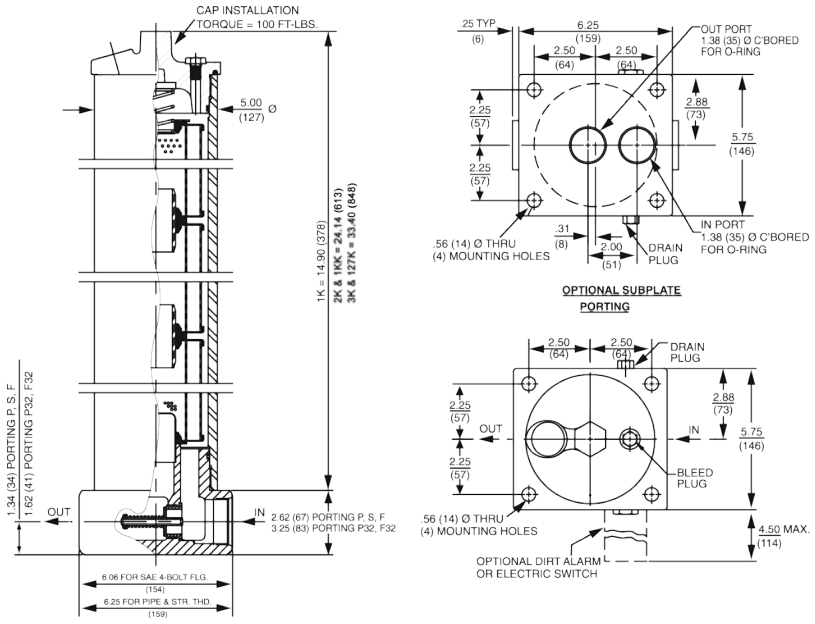

Metric dimensions in ( ).
Dimensions shown are inches (millimeters) for general information and overall envelope size only.
For complete dimensions please contact Schroeder Industries to request a certified print.

Element Performance Information & Dirt Holding Capacity

Element	Filtration Ratio Per ISO 4572/NFPA T3.10.8.8 Using automated particle counter (APC) calibrated per ISO 4402			Filtration Ratio per ISO 16889 Using APC calibrated per ISO 11171	
	$ß_x \geq 75$	$ß_x \geq 100$	$ß_x \geq 200$	$ß_x(c) \geq 200$	$ß_x(c) \geq 1000$
KZ1/KKZ1/27KZ1	<1.0	<1.0	<1.0	<4.0	4.2
KZ3/KKZ3/27KZ3	<1.0	<1.0	<2.0	<4.0	4.8
KZ5/KKZ5/27KZ5	2.5	3.0	4.0	4.8	6.3
KZ10/KKZ10/27KZ10	7.4	8.2	10.0	8.0	10.0
KZ25/KKZ25/27KZ25	18.0	20.0	22.5	19.0	24.0
KZW1	N/A	N/A	N/A	<4.0	<4.0
KZW3/KKZW3	N/A	N/A	N/A	4.0	4.8
KZW5/KKZW5	N/A	N/A	N/A	5.1	6.4
KZW10/KKZW10	N/A	N/A	N/A	6.9	8.6
KZW25/KKZW25	N/A	N/A	N/A	15.4	18.5
KZX3/KKZX3/27KZX3	<1.0	<1.0	<2.0	4.7	5.8
KZX10/KKZX10/27KZX10	7.4	8.2	10.0	8.0	9.8

Element	DHC (gm)	Element	DHC (gm)	Element	DHC (gm)	Element	DHC (gm)	Element	DHC (gm)
KZ1	112	KKZ1	224	27KZ1	336	KZW1	61		
KZ3	115	KKZ3	230	27KZ3	345	KZW3	64	KKZW3	128
KZ5	119	KKZ5	238	27KZ5	357	KZW5	63	KKZW5	126
KZ10	108	KKZ10	216	27KZ10	324	KZW10	57	KKZW10	114
KZ25	93	KKZ25	186	27KZ25	279	KZW25	79	KKZW25	158
KZX3	81*	KKZX3	163*	27KZX3	249*				
KZX10	90*	KKZX10	182*	27KZX10	279*				

* Based on 100 psi terminal pressure

Element Collapse Rating: 150 psid (10 bar) for standard elements
3000 psid (210 bar) for high collapse (ZX) versions

Flow Direction: Outside In

Element Nominal Dimensions:
K: 3.9" (99 mm) O.D. x 9.0" (230 mm) long
KK: 3.9" (99 mm) O.D. x 18.0" (460 mm) long
27K: 3.9" (99 mm) O.D. x 27.0" (690 mm) long

Pressure Drop Information

Based on Flow Rate and Viscosity

$\Delta P_{housing}$

KF30/KF50 $\Delta P_{housing}$ for fluids with sp gr (specific gravity) = 0.86:

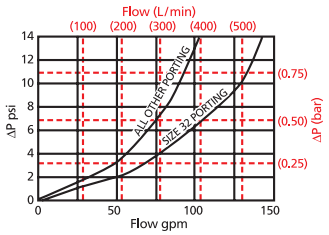

$\Delta P_{element}$

KZ/KGZ

Element Pressure Drop versus Flow Rate at 32 cSt (150 SUS)

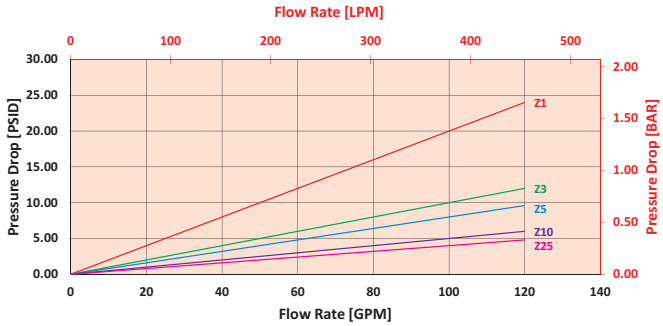

KKZ/KKGZ

Element Pressure Drop versus Flow Rate at 32 cSt (150 SUS)

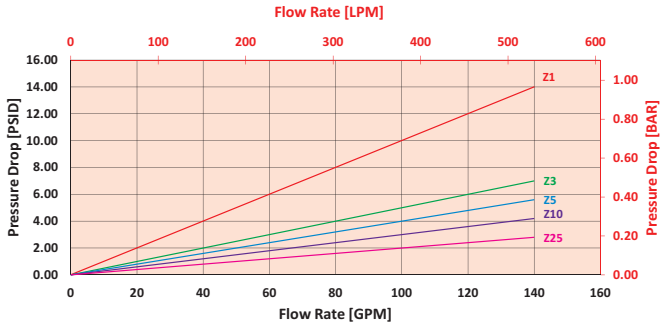

$$\Delta P_{filter} = \Delta P_{housing} + (\Delta P_{element} * V_f)$$

Exercise:

Determine ΔP_{filter} at 50 gpm (189.5 L/min) for KF301KZ10SD5 using 160 SUS (34 cSt) fluid.

Use the housing pressure curve to determine $\Delta P_{housing}$ at 50 gpm. In this case, $\Delta P_{housing}$ is 3 psi (.21 bar) on the graph for the KF30 housing.

Use the element pressure curve to determine $\Delta P_{element}$ at 50 gpm. In this case, $\Delta P_{element}$ is 2.5 psi (.17 bar) according to the graph for the KZ10 element.

Because the viscosity in this sample is 160 SUS (34 cSt), we determine the Viscosity Factor (V_f) by dividing the Operating Fluid Viscosity with the Standard Viscosity of 150 SUS (32 cSt). To best determine your Operating Fluid Viscosity, please reference the chart in Appendix D.

Finally, the overall filter pressure differential, ΔP_{filter}, is calculated by adding $\Delta P_{housing}$ with the true element pressure differential, ($\Delta P_{element} * V_f$). The $\Delta P_{element}$ from the graph has to be multiplied by the viscosity factor to get the true pressure differential across the element.

Solution:

$\Delta P_{housing}$ = 3 psi [.21 bar] | $\Delta P_{element}$ = 2.5 psi [.17 bar]

V_f = 160 SUS (34 cSt) / 150 SUS (32 cSt) = 1.1

ΔP_{filter} = 3 psi + (2.5 psi * 1.1) = 5.8 psi

OR

ΔP_{filter} = .21 bar + (.17 bar * 1.1) = .40 bar

Note:
If your element is not graphed, use the following equation:
$\Delta P_{element}$ = Flow Rate x $\Delta P_{f.}$ Plug this variable into the overall pressure drop equation.

Ele.	ΔP	Ele.	ΔP	Ele.	ΔP
K3	0.25	2K3/ KK3	0.12	3KZ1/ 27KZ1	0.05
K10	0.09	2K10/ KK10	0.05	3KZ3/ 27KZ3	0.03
K25	0.02	2K25/ KK25	0.01	3KZ5/ 27KZ5	0.02
KAS3	0.10	2KAS3/ KKAS3	0.05	3KZ10/ 27KZ10	0.02
KAS5	0.08	2KAS5/ KKAS5	0.04	3KZ25/ 27KZ25	0.01
KAS10	0.05	2KAS10/ KKAS10	0.03	3K3	0.08
KZX10	0.22	2KZX10/ KKZX10	0.11	3K10	0.03
KZW1	0.43	2KZW1	-	3K25	0.01
KZW3	0.32	2KZW3/ KKZW3	0.16	3KAS3/ 27KAS3	0.03
KZW5	0.28	2KZW5/ KKZW5	0.14	3KAS5/ 27KAS5	0.02
KZW10	0.23	2KZW10/ KKZW10	0.12	3KAS10/ 27KAS10	0.02
KZW25	0.14	2KZW25/ KKZW25	0.07	3KAS25/ 27KAS25	0.07

Base-Ported Pressure Filter

Filter Model Number Selection

Highlighted product eligible for QuickDelivery

How to Build a Valid Model Number for a Schroeder KF30:

BOX 1	BOX 2	BOX 3	BOX 4	BOX 5	BOX 6	BOX 7	BOX 8	BOX 9	BOX 10	BOX 11
KF30 –	–	–	–	–	–	–	–	–	–	

Example: NOTE: Only boxes 8 and 10 may contain more than one option

BOX 1	BOX 2	BOX 3	BOX 4	BOX 5	BOX 6	BOX 7	BOX 8	BOX 9	BOX 10	BOX 11	
GKF30 –	KG –	Z –	10 –	–	–	S –	–	D5 –	–	–	= GKF30Z10SD5

BOX 1 — Filter Series

- KF30
- KFN30 (Non-bypassing: requires ZX high collapse elements)
- GKF30 (GeoSeal®)
- KF50
- KFN50 (Non-bypassing: requires ZX high collapse elements)
- GKF50 (GeoSeal®)

BOX 2 — Number & Size of Elements

- 1 = K, KK, 27K
- 2 = K
- 3 = K

GeoSeal® Options

- 1 = KG, KKG, 27KKG
- 2 = KG
- 3 = KG

BOX 3 — Media Type

Omit =	E Media (Cellulose)
AS =	Anti-Stat Media (synthetic)
Z =	Excellement® Z-Media® (synthetic)
ZW =	Aqua-Excellement® ZW Media
ZX =	Excellement® Z-Media® (High Collapse centertube)
W =	W Media (water removal)
M =	Media (reusable metal mesh) N size only

BOX 4 — Micron Rating

1	= 1 Micron	(Z, ZW, ZX media)
3	= 3 Micron	(AS,E, Z, ZW, ZX media)
5	= 5 Micron	(AS, Z, ZW, ZX media)
10	= 10 Micron	(AS,E,M, Z, ZW, ZX media)
25	= 25 Micron	(E, M, Z, ZW, ZX media)
60	= 60 Micron	(M media)
150	= 150 Micron	(M media)
260	= 260 Micron	(M media)

BOX 5 — Seal Material

Omit	= Buna N
V	= Viton®
H	= EPR
H.5	= Skydrol® compatibility

BOX 6 — Magnet Option

Omit	= None
M	= Magnet inserts (not available w/ indicator in cap)

BOX 7 — Porting

P	= 1 ½" NPTF
P32	= 2" NPTF
S	= SAE-24
F	= 1 ½" SAE 4-bolt flange (KF30 Code 61) (KF50 Code 62)
F32	= 2" SAE 4-bolt flange Code 61(KF30) *KF30 Only
O	= Subplate
B24	= ISO 228 G-1 ½"

BOX 8 — Bypass

Omit	= 40 PSI Bypass
X	= Blocked bypass
50	= 50 psi bypass setting
60	= 60 psi bypass setting

(Omit Box 8 if non-bypassing filter is used)

BOX 9 — Test Point

Omit	= None
L	= Two ¼" NPTF inlet & outlet female test ports
U	= Series 1215 7/16 UNF Schroeder Check Test Point installed in cap (upstream)
UU	= Series 1215 7/16 UNF Schroeder Check Test Point installed in block (upstream and downstream)

BOX 10 — Dirt Alarm® Options

	Omit =	None
Visual	D =	Pointer
	D5 =	Visual pop-up
	D5C =	D5 in cap
	D9 =	All stainless D5
Visual with Thermal Lockout	D8 =	Visual w/ thermal lockout
	D8C =	D8 in cap
Electrical	MS5 =	Electrical w/ 12 in. 18 gauge 4-conductor cable
	MS5LC =	Low current MS5
	MS10 =	Electrical w/ DIN connector (male end only)
	MS10LC =	Low current MS10
	MS11 =	Electrical w/ 12 ft. 4-conductor wire
	MS12 =	Electrical w/ 5 pin Brad Harrison connector (male end only)
	MS12LC =	Low current MS12
	MS16 =	Electrical w/ weather-packed sealed connector
	MS16LC =	Low current MS16
	MS17LC =	Electrical w/ 4 pin Brad Harrison male connector
Electrical with Thermal Lockout	MS5T =	MS5 (see above) w/ thermal lockout
	MS5LCT =	Low current MS5T
	MS10T =	MS10 (see above) w/ thermal lockout
	MS10LCT =	Low current MS10T
	MS12T =	MS12 (see above) w/ thermal lockout
	MS12LCT =	Low current MS12T
	MS16T =	MS16 (see above) w/ thermal lockout
	MS16LCT =	Low current MS16T
	MS17LCT =	Low current MS17T
Electrical Visual	MS =	Cam operated switch w/ ½" conduit female connection
	MS13DC =	Supplied w/ threaded connector & light
	MS14DC =	Supplied w/ 5 pin Brad Harrison connector & light (male end)
Electrical Visual with Thermal Lockout	MS13DCT =	MS13 (see above), direct current, w/ thermal lockout
	MS13DCLCT =	Low current MS13DCT
	MS14DCT =	MS14 (see above), direct current, w/ thermal lockout
	MS14DCLCT =	Low current MS14DCT

BOX 11 — Additional Options

Omit	= None
N	= No-Element Indicator (not available w/ KFN30/KFN50/ GKF30/GKF50 or housings w/ indicator in cap)
C	= Electrical indicator in cap vs. in base standard
G509	= Dirt Alarm and drain opposite standard
G588	= Electric Switch and drain opposite standard

NOTES:

Box 2. Number of elements must equal 1 when using KK or 27K elements. Replacement element part numbers are identical to contents of Boxes 2, 3, 4 and 5. Double and triple stacking of K-size elements can be replaced by single KK and 27K elements, respectively. ZW media not available in 27K length. For standard elements, a plastic connector SAP P/N: 7630900(LF-1997) is used to connect two or three K elements. For high collapse, a steel connector is required SAP P/N: 7608360 (LF-3255C).

Box 5. H.5 seal designation includes the following: EPR seals, stainless steel wire mesh on elements, and light oil coating on housing exterior. Viton® is a registered trademark of DuPont Dow Elastomers. Skydrol® is a registered trademark of Solutia Inc.

Box 7. For options F & F32, bolt depth .75" (19 mm).

For option O, O-rings included; hardware not included.

Box 8. When X is paired with a standard filter series, a standard bushing and spring plate will be used.

Box 9. Standard indicator setting for non-bypassing model is 50 psi unless otherwise specified.

Box 10. Options N, are not available with KFN30, KFN50. N option should be used in conjunction with dirt alarm.

Base-Ported Pressure Filter TF50

Model No. of filter in photograph is TF502A10P.

Features and Benefits

- Base-ported pressure filter
- Can be installed in vertical or horizontal position
- Element changeout from top minimizes oil spillage
- Offered in pipe, SAE straight thread, flanged and ISO 228 porting
- Available with non-bypass option with high collapse element
- Integral inlet and outlet female test points option available
- Offered in conventional subplate porting

40 gpm
150 L/min
5000 psi
345 bar

Filter Housing Specifications

Flow Rating:	Up to 40 gpm (150 L/min) for 150 SUS (32 cSt) fluids
Max. Operating Pressure:	5000 psi (345 bar)
Min. Yield Pressure:	15,000 psi (1035 bar), per NFPA T2.6.1
Rated Fatigue Pressure:	3500 psi (240 bar), per NFPA T2.6.1-2005
Temp. Range:	-20°F to 225°F (-29°C to 107°C)
Bypass Setting:	Cracking: 40 psi (2.8 bar) Full Flow: 69 psi (4.8 bar) Non-bypassing model has a blocked bypass.
Porting Base: Element Case & Cap:	Ductile Iron Steel
Weight of TF50-1A: Weight of TF50-2A:	24.4 lbs. (11.1 kg) 29.8 lbs. (13.5 kg)
Element Change Clearance:	8.50" (215 mm)

Fluid Compatibility

Type Fluid	Appropriate Schroeder Media
Petroleum Based Fluids	All E media (cellulose) and Z-Media® (synthetic)
High Water Content	All Z-Media® (synthetic)
Invert Emulsions	10 and 25 µ Z-Media® (synthetic)
Water Glycols	3, 5, 10 and 25 µ Z-Media® (synthetic)
Phosphate Esters	All Z-Media® (synthetic) with H (EPR) seal designation
Skydrol®	3, 5, 10 and 25 µ Z-Media® (synthetic) with H.5 seal designation (EPR seals and stainless steel wire mesh in element, and light oil coating on housing exterior)

TF50 Base-Ported Pressure Filter

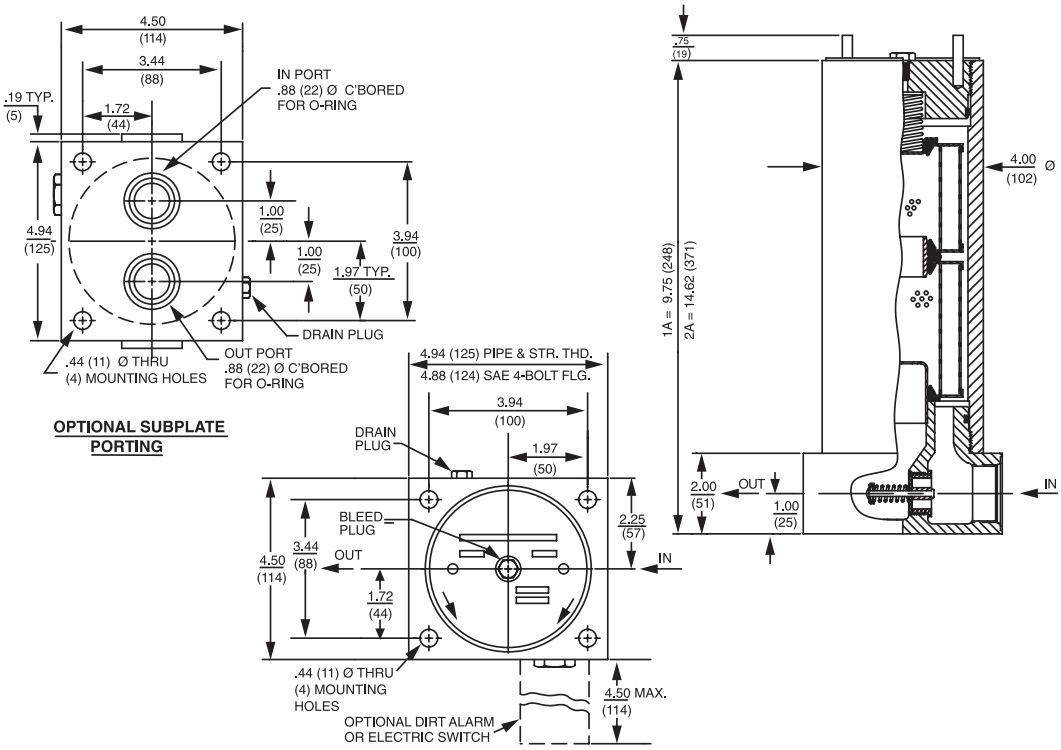

Metric dimensions in ( ).
Dimensions shown are inches (millimeters) for general information and overall envelope size only.
For complete dimensions please contact Schroeder Industries to request a certified print.

Element Performance Information & Dirt Holding Capacity

	Filtration Ratio Per ISO 4572/NFPA T3.10.8.8 Using automated particle counter (APC) calibrated per ISO 4402			Filtration Ratio per ISO 16889 Using APC calibrated per ISO 11171	
Element	$ß_x \geq 75$	$ß_x \geq 100$	$ß_x \geq 200$	$ß_x^{(c)} \geq 200$	$ß_x^{(c)} \geq 1000$
AZ1	<1.0	<1.0	<1.0	<4.0	4.2
AZ3	<1.0	<1.0	<2.0	<4.0	4.8
AZ5	2.5	3.0	4.0	4.8	6.3
AZ10	7.4	8.2	10.0	8.0	10.0
AZ25	18.0	20.0	22.5	19.0	24.0
CCZX3	<1.0	<1.0	<2.0	4.7	5.8
CCZX10	7.4	8.2	10.0	8.0	10.0

Element	DHC (gm)
AZ1	25
AZ3	26
AZ5	30
AZ10	28
AZ25	28
CCZX3	26*
CCZX10	28*

Element Collapse Rating: 150 psid (10 bar) for standard elements
3000 psid (210 bar) for high collapse (ZX) versions

Flow Direction: Outside In

* Based on 100 psi terminal pressure

Element Nominal Dimensions: A: 3.0" (75 mm) O.D. x 4.5" (115 mm) long
CC: 3.0" (75 mm) O.D. x 9.5" (240 mm) long

Pressure Drop Information

Based on Flow Rate and Viscosity

$\Delta P_{housing}$

TF50 $\Delta P_{housing}$ for fluids with sp gr (specific gravity) = 0.86:

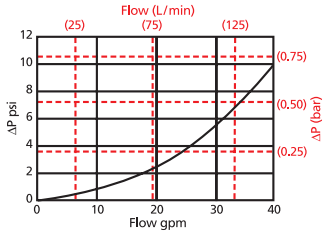

$\Delta P_{element}$

1AZ

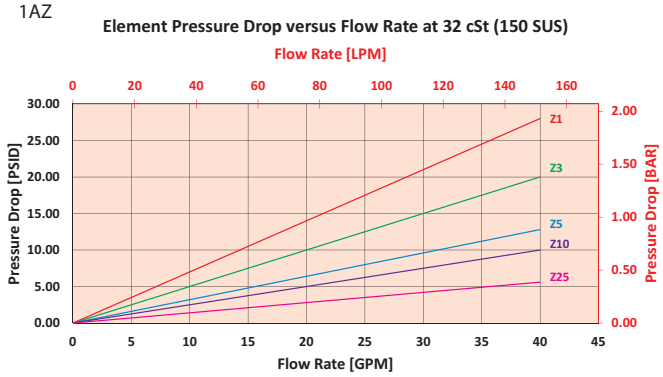

2AZ

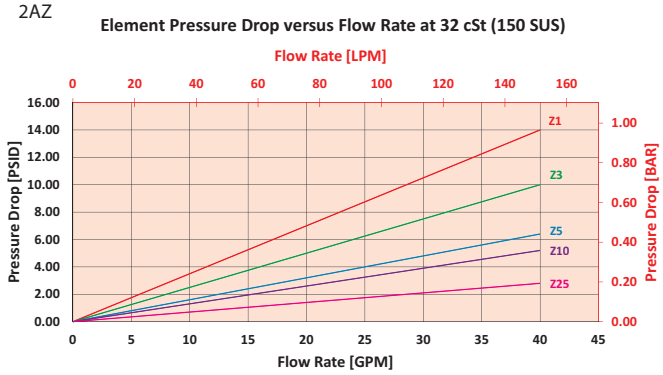

$$\Delta P_{filter} = \Delta P_{housing} + (\Delta P_{element} * V_f)$$

Exercise:

Determine ΔP_{filter} at 15 gpm (57 L/min) for TF501AZ10SD5 using 175 SUS (37.2 cSt) fluid.

Use the housing pressure curve to determine $\Delta P_{housing}$ at 15 gpm. In this case, $\Delta P_{housing}$ is 1.8 psi (.12 bar) on the graph for the TF50 housing.

Use the element pressure curve to determine $\Delta P_{element}$ at 15 gpm. In this case, $\Delta P_{element}$ is 3.8 psi (.26 bar) according to the graph for the AZ10 element.

Because the viscosity in this sample is 175 SUS (37.2 cSt), we determine the Viscosity Factor (V_f) by dividing the Operating Fluid Viscosity with the Standard Viscosity of 150 SUS (32 cSt). To best determine your Operating Fluid Viscosity, please reference the chart in Appendix D.

Finally, the overall filter pressure differential, ΔP_{filter}, is calculated by adding $\Delta P_{housing}$ with the true element pressure differential, ($\Delta P_{element} * V_f$). The $\Delta P_{element}$ from the graph has to be multiplied by the viscosity factor to get the true pressure differential across the element.

Solution:

$\Delta P_{housing}$ = 1.8 psi [.12 bar] | $\Delta P_{element}$ = 3.8 psi [.26 bar]

V_f = 175 SUS (37.2 cSt) / 150 SUS (32 cSt) = 1.2

ΔP_{filter} = 1.8 psi + (3.8 psi * 1.2) = 6.4 psi

OR

ΔP_{filter} = .12 bar + (.26 bar * 1.2) = .43 bar

Note:
If your element is not graphed, use the following equation:
$\Delta P_{element}$ = Flow Rate x ΔP_f Plug this variable into the overall pressure drop equation.

Ele.	ΔP	Ele.	ΔP
A3	0.53	AA3	0.16
A10	0.36	AA10	0.18
A25	0.05	AA25	0.03
CCZX3	0.29		
CCZX10	0.26		

TF50 Base-Ported Pressure Filter

Filter Model Number Selection

How to Build a Valid Model Number for a Schroeder TF50:

BOX 1	BOX 2	BOX 3	BOX 4	BOX 5	BOX 6	BOX 7	BOX 8	BOX 9	BOX 10
TF50									

BOX 1	BOX 2	BOX 3	BOX 4	BOX 5	BOX 6	BOX 7	BOX 8	BOX 9	BOX 10	
TF50	1	AZ5			S		D5			= TF501AZ5SD5

BOX 1

Filter Series
TF50
TFN50 (Non-by-passing: requires ZX high collapse elements)

BOX 2

Number
1
2 (AZ elements only)

BOX 3

Media Type	
AZ1	= 1 µ Excellement® Z-Media® (synthetic)
AZ3	= 3 µ Excellement® Z-Media® (synthetic)
AZ5	= 5 µ Excellement® Z-Media® (synthetic)
AZ10	= 10 µ Excellement® Z-Media® (synthetic)
AZ25	= 25 µ Excellement® Z-Media® (synthetic)
CCZX1	= 1 µ Excellement® Z-Media® (high collapse center tube)
CCZX3	= 3 µ Excellement® Z-Media® (high collapse center tube)
CCZX5	= 5 µ Excellement® Z-Media® (high collapse center tube)
CCZX10	= 10 µ Excellement® Z-Media® (high collapse center tube)
CCZX25	= 25 µ Excellement® Z-Media® (high collapse center tube)

BOX 4

Seal Material	
Omit	= Buna N
V	= Viton®
H	= EPR
H.5	= Skydrol® compatibility

BOX 5

Magnet option	
Omit	= None
M	= Magnet inserts (not available w/ indicator in cap or TFN50)

BOX 6

Porting	
P	= 1" NPTF
S	= SAE-16
F	= 1" SAE 4-bolt flange Code 61
O	= Subplate
B	= ISO 228 G-1"

BOX 7

Bypass	
Omit	= 40 PSI Bypass
X	= Blocked bypass
50	= 50 psi bypass setting
60	= 60 psi bypass setting

BOX 8

Test Points	
L	= Two 1/4" NPTF inlet and outlet female test ports
U	= Series 1215 7/16 UNF Schroeder Check Test Point installation in cap (upstream)
UU	= Series 1215 7/16 UNF Schroeder Check Test Point installation in block (upstream and downstream)

BOX 9

Dirt Alarm® Options		
None	Omit =	None
Visual	D =	Pointer
	D5 =	Visual pop-up
	D5C =	D5 in cap
	D9 =	All stainless D5
Visual with Thermal Lockout	D8 =	Visual w/ thermal lockout
	D8C =	D8 in cap
Electrical	MS5 =	Electrical w/ 12 in. 18 gauge 4-conductor cable
	MS5LC =	Low current MS5
	MS10 =	Electrical w/ DIN connector (male end only)
	MS10LC =	Low current MS10
	MS11 =	Electrical w/ 12 ft. 4-conductor wire
	MS12 =	Electrical w/ 5 pin Brad Harrison connector (male end only)
	MS12LC =	Low current MS12
	MS16 =	Electrical w/ weather-packed sealed connector
	MS16LC =	Low current MS16
	MS17LC =	Electrical w/ 4 pin Brad Harrison male connector
Electrical with Thermal Lockout	MS5T =	MS5 (see above) w/ thermal lockout
	MS5LCT =	Low current MS5T
	MS10T =	MS10 (see above) w/ thermal lockout
	MS10LCT =	Low current MS10T
	MS12T =	MS12 (see above) w/ thermal lockout
	MS12LCT =	Low current MS12T
	MS16T =	MS16 (see above) w/ thermal lockout
	MS16LCT =	Low current MS16T
	MS17LCT =	Low current MS17T
Electrical Visual	MS =	Cam operated switch w/ 1/2" conduit female connection
	MS13 =	Supplied w/ threaded connector & light
	MS14 =	Supplied w/ 5 pin Brad Harrison connector & light (male end)
Electrical Visual with Thermal Lockout	MS13DCT =	MS13 (see above), direct current, w/ thermal lockout
	MS13DCLCT =	Low current MS13DCT
	MS14DCT =	MS14 (see above), direct current, w/ thermal lockout
	MS14DCLCT =	Low current MS14DCT

BOX 10

Additional Options	
Omit	= None
N	= No-Element indicator (not available with TFN50)
G509	= Dirt alarm and drain opposite standard
G588	= Electrical switch and drain opposite standard

NOTES:

Box 7. When X is paired with a standard filter series, a standard bushing and spring plate will be used.

Base-Ported Pressure Filter KC50

Model No. of filter in photograph is KC501KZ10PD.

Features and Benefits

- Base-ported pressure filter
- Patented dirt-tolerant cap design
- Can be installed in vertical or horizontal position
- Meets HF4 automotive standard
- Element changeout from top minimizes oil spillage
- Ofered in pipe, SAE straight thread, flanged and ISO 228 porting
- No-Element indicator option available
- Available with non-bypass option with high collapse element
- Integral inlet and outlet female test points option available
- Offered in conventional subplate porting
- Double and triple stacking of K-size elements can be replaced by single KK or 27K-size elements
- G Available with quality-protected GeoSeal® Elements (GKC50)

100/150 gpm
380/570 L/min
5000 psi
345 bar

Filter Housing Specifications

Flow Rating:	Up to 100 gpm (380 L/min) for 150 SUS (32 cSt) fluids With 2" porting only, up to 150 gpm (570 L/min) for 150 SUS (32 cSt) fluids
Max. Operating Pressure:	5000 psi (345 bar)
Min. Yield Pressure:	15,000 psi (1035 bar), per NFPA T2.6.1
Rated Fatigue Pressure:	3500 psi (240 bar), per NFPA T2.6.1-2005
Temp. Range:	-20°F to 225°F (-29°C to 107°C)
Bypass Setting:	Cracking: 40 psi (2.8 bar) Optional Cracking: 50 psi (3.5 bar) Full Flow: 61 psi (4.2 bar) Non-bypassing model has a blocked bypass.
Porting Base & Cap:	Ductile Iron
Element Case:	Steel
Weight of KF30-1K: Weight of KF30-2K: Weight of KF30-3K:	66.8 lbs. (30.3 kg) 87.8 lbs. (39.8 kg) 109.6 lbs. (49.7 kg)
Element Change Clearance:	8.50" (215 mm) for 1K; 17.50" (445 mm) for KK; 26.5" (673 mm) for 27K

Fluid Compatibility

Type Fluid	Appropriate Schroeder Media
Petroleum Based Fluids	All E-Media (cellulose) and Z-Media® and ASP® Media (synthetic)
High Water Content	All Z-Media® and ASP® Media (synthetic)
Invert Emulsions	10 and 25 µ Z-Media® (synthetic), 10 µ ASP® Media (synthetic)
Water Glycols	3, 5, 10 and 25 µ Z-Media® (synthetic), and all ASP® Media
Phosphate Esters	All Z-Media® and ASP® Media (synthetic) with H (EPR) seal designation and 3 and 10 µ E media (cellulose) with H (EPR) seal designation
Skydrol®	3, 5, 10 and 25 µ Z-Media® (synthetic), and all ASP® Media (synthetic) with H.5 seal designation (EPR seals and stainless steel wire mesh in element, and light oil coating on housing exterior)

KC50 Base-Ported Pressure Filter

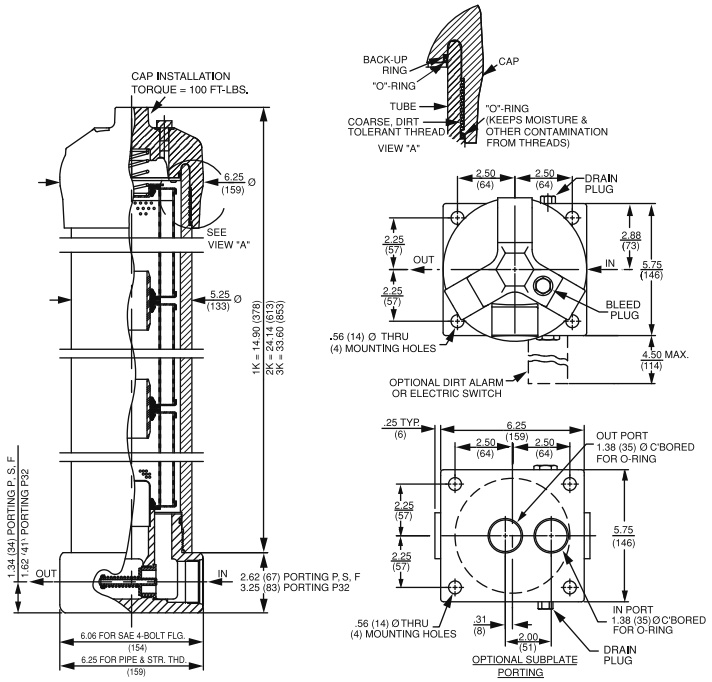

Metric dimensions in ( ).
Dimensions shown are inches (millimeters) for general information and overall envelope size only.
For complete dimensions please contact Schroeder Industries to request a certified print.

Element Performance Information & Dirt Holding Capacity

Element	Filtration Ratio Per ISO 4572/NFPA T3.10.8.8 Using automated particle counter (APC) calibrated per ISO 4402			Filtration Ratio per ISO 16889 Using APC calibrated per ISO 11171	
	$ß_x \geq 75$	$ß_x \geq 100$	$ß_x \geq 200$	$ß_x(c) \geq 200$	$ß_x(c) \geq 1000$
KZ1/KKZ1/27KZ1	<1.0	<1.0	<1.0	<4.0	4.2
KZ3/KKZ3/27KZ3	<1.0	<1.0	<2.0	<4.0	4.8
KZ5/KKZ5/27KZ5	2.5	3.0	4.0	4.8	6.3
KZ10/KKZ10/27KZ10	7.4	8.2	10.0	8.0	10.0
KZ25/KKZ25/27KZ25	18.0	20.0	22.5	19.0	24.0
KZW1	N/A	N/A	N/A	<4.0	<4.0
KZW3/KKZW3	N/A	N/A	N/A	4.0	4.8
KZW5/KKZW5	N/A	N/A	N/A	5.1	6.4
KZW10/KKZW10	N/A	N/A	N/A	6.9	8.6
KZW25/KKZW25	N/A	N/A	N/A	15.4	18.5
KZX3/KKZX3/27KZX3	<1.0	<1.0	<2.0	4.7	5.8
KZX10/KKZX10/27KZX10	7.4	8.2	10.0	8.0	9.8

Element	DHC (gm)	Element	DHC (gm)	Element	DHC (gm)	Element	DHC (gm)	Element	DHC (gm)
KZ1	112	KKZ1	224	27KZ1	336	KZW1	61		
KZ3	115	KKZ3	230	27KZ3	345	KZW3	64	KKZW3	128
KZ5	119	KKZ5	238	27KZ5	357	KZW5	63	KKZW5	126
KZ10	108	KKZ10	216	27KZ10	324	KZW10	57	KKZW10	114
KZ25	93	KKZ25	186	27KZ25	279	KZW25	79	KKZW25	158
KZX3	81*	KKZX3	163*	27KZX3	249*				
KZX10	90*	KKZX10	182*	27KZX10	279*				

* Based on 100 psi terminal pressure

Element Collapse Rating: 150 psid (10 bar) for standard elements
3000 psid (210 bar) for high collapse (ZX) versions

Flow Direction: Outside In

Element Nominal Dimensions:
K: 3.9" (99 mm) O.D. x 9.0" (230 mm) long
KK: 3.9" (99 mm) O.D. x 18.0" (460 mm) long
27K: 3.9" (99 mm) O.D. x 27.0" (690 mm) long

Pressure Drop Information

Based on Flow Rate and Viscosity

$\Delta P_{housing}$

KC50 $\Delta P_{housing}$ for fluids with sp gr (specific gravity) = 0.86:

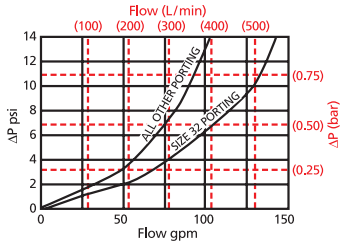

$\Delta P_{element}$

KZ/KGZ

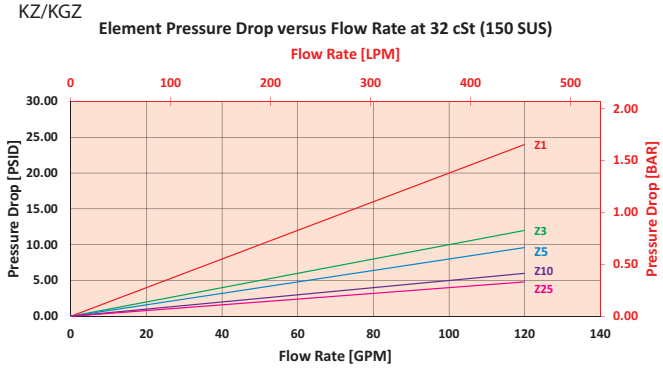

2KZ/KKGZ

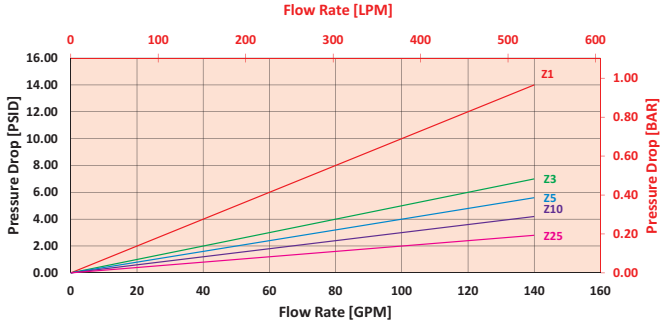

$$\Delta P_{filter} = \Delta P_{housing} + (\Delta P_{element} * V_f)$$

Exercise:

Determine ΔP_{filter} at 50 gpm (189.5 L/min) for KC501KZ10SD5 using 160 SUS (34 cSt) fluid.

Use the housing pressure curve to determine $\Delta P_{housing}$ at 50 gpm. In this case, $\Delta P_{housing}$ is 3 psi (.21 bar) on the graph for the KC50 housing.

Use the element pressure curve to determine $\Delta P_{element}$ at 50 gpm. In this case, $\Delta P_{element}$ is 2.5 psi (.17 bar) according to the graph for the KZ10 element.

Because the viscosity in this sample is 160 SUS (34 cSt), we determine the Viscosity Factor (V_f) by dividing the Operating Fluid Viscosity with the Standard Viscosity of 150 SUS (32 cSt). To best determine your Operating Fluid Viscosity, please reference the chart in Appendix D.

Finally, the overall filter pressure differential, ΔP_{filter}, is calculated by adding $\Delta P_{housing}$ with the true element pressure differential, ($\Delta P_{element} * V_f$). The $\Delta P_{element}$ from the graph has to be multiplied by the viscosity factor to get the true pressure differential across the element.

Solution:

$\Delta P_{housing}$ = 3 psi [.21 bar] | $\Delta P_{element}$ = 2.5 psi [.17 bar]

V_f = 160 SUS (34 cSt) / 150 SUS (32 cSt) = 1.1

ΔP_{filter} = 3 psi + (2.5 psi * 1.1) = 5.8 psi

OR

ΔP_{filter} = .21 bar + (.17 bar * 1.1) = .40 bar

Note:
If your element is not graphed, use the following equation:
$\Delta P_{element}$ = Flow Rate x $\Delta P_{f.}$ Plug this variable into the overall pressure drop equation.

Ele.	ΔP	Ele.	ΔP	Ele.	ΔP
K3	0.25	2K3/ KK3	0.12	3KZ1/ 27KZ1	0.05
K10	0.09	2K10/ KK10	0.05	3KZ3/ 27KZ3	0.03
K25	0.02	2K25/ KK25	0.01	3KZ5/ 27KZ5	0.02
KAS3	0.10	2KAS3/ KKAS3	0.05	3KZ10/ 27KZ10	0.02
KAS5	0.08	2KAS5/ KKAS5	0.04	3KZ25/ 27KZ25	0.01
KAS10	0.05	2KAS10/ KKAS10	0.03	3K3	0.08
KZX10	0.22	2KZX10/ KKZX10	0.11	3K10	0.03
KZW1	0.43	2KZW1	-	3K25	0.01
KZW3	0.32	2KZW3/ KKZW3	0.16	3KAS3/ 27KAS3	0.03
KZW5	0.28	2KZW5/ KKZW5	0.14	3KAS5/ 27KAS5	0.02
KZW10	0.23	2KZW10/ KKZW10	0.12	3KAS10/ 27KAS10	0.02
KZW25	0.14	2KZW25/ KKZW25	0.07	3KAS25/ 27KAS25	0.07

KC50 Base-Ported Pressure Filter

Filter Model Number Selection

How to Build a Valid Model Number for a Schroeder KC50:

BOX 1	BOX 2	BOX 3	BOX 4	BOX 5	BOX 6	BOX 7	BOX 8	BOX 9	BOX 10	BOX 11
KC50 –	–	–	–	–	–	–	–	–	–	–

BOX 1	BOX 2	BOX 3	BOX 4	BOX 5	BOX 6	BOX 7	BOX 8	BOX 9	BOX 10	BOX 11	
KC50 –	1K –	Z –	10 –	–	–	S –	–	–	D5 –	–	= KC501KZ10SD5

BOX 1

Filter Series

- KC50
- KCN50 (Non-bypassing: requires ZX high collapse elements)
- GKC50 (GeoSeal®)
- WKC50 (Water)

BOX 2

Number & Size of Elements

1	K, KK, 27K
2	K
3	K
GeoSeal® Options	
1	KG, KKG, 27KG
2	KG
3	KG

BOX 3

Media Type

Omit =	E Media (Cellulose) (KC50 only)
AS =	Anti-Stat Media (synthetic)
Z =	Excellement® Z-Media® (synthetic)
ZX =	Excellement® Z-Media® (High Collapse centertube) (KCN50 Only)
ZW =	Aqua-Excellement ZW Media (KC50 Only)
W =	W Media (water removal)
M =	Media (reusable metal mesh) (KC50 & KCN50 Only)

BOX 4

Micron Rating

1	= 1 Micron	(Z, ZW, ZX media)
3	= 3 Micron	(AS,E, Z, ZW, ZX media)
5	= 5 Micron	(AS, Z, ZW, ZX media)
10	= 10 Micron	(AS,E,M, Z, ZW, ZX media)
25	= 25 Micron	(E,M, Z, ZW, ZX media)
60	= 60 Micron	(M media)
150	= 150 Micron	(M media)
260	= 260 Micron	(M media)

BOX 5

Seal Material

Omit	= Buna N
V	= Viton®
H	= EPR
H.5	= Skydrol® compatibility

BOX 6

Magnet Option

Omit	= None
M	= Magnet inserts (not available w/ indicator in cap)

BOX 7

Porting

P	= 1 ½" NPTF
P32	= 2" NPTF
S	= SAE-24
F	= 1 ½" SAE 4-bolt flange Code 62
O	= Subplate
B24	= ISO 228 G-1 ½"

BOX 8

Bypass

Omit	= 40 PSI Bypass
X	= Blocked bypass
50	= 50 psi bypass setting

(Omit Box 8 if KCN50)

BOX 9

Test Points

Omit	= None
L	= Two ¼" NPTF inlet & outlet female test ports
U	= Series 1215 7/16 UNF Schroeder Check Test Point installed in cap (upstream)
UU	= Series 1215 7/16 UNF Schroeder Check Test Point installed in block (upstream and downstream)

BOX 10

Dirt Alarm® Options

None	Omit =	None
Visual	D =	Pointer
	D5 =	Visual pop-up
	D5C =	D5 in cap
	D9 =	All stainless D5
Visual with Thermal Lockout	D8 =	Visual w/ thermal lockout
	D8C =	D8 in cap
Electrical	MS5 =	Electrical w/ 12 in. 18 gauge 4-conductor cable
	MS5LC =	Low current MS5
	MS10 =	Electrical w/ DIN connector (male end only)
	MS10LC =	Low current MS10
	MS11 =	Electrical w/ 12 ft. 4-conductor wire
	MS12 =	Electrical w/ 5 pin Brad Harrison connector (male end only)
	MS12LC =	Low current MS12
	MS16 =	Electrical w/ weather-packed sealed connector
	MS16LC =	Low current MS16
	MS17LC =	Electrical w/ 4 pin Brad Harrison male connector
Electrical with Thermal Lockout	MS5T =	MS5 (see above) w/ thermal lockout
	MS5LCT =	Low current MS5T
	MS10T =	MS10 (see above) w/ thermal lockout
	MS10LCT =	Low current MS10T
	MS12T =	MS12 (see above) w/ thermal lockout
	MS12LCT =	Low current MS12T
	MS16T =	MS16 (see above) w/ thermal lockout
	MS16LCT =	Low current MS16T
	MS17LCT =	Low current MS17T
Electrical Visual	MS =	Cam operated switch w/ ½" conduit female connection
	MS13DC=	Supplied w/ threaded connector & light
	MS14DC =	Supplied w/ 5 pin Brad Harrison connector & light (male end)
Electrical Visual with Thermal Lockout	MS13DCT =	MS13 (see above), direct current, w/ thermal lockout
	MS13DCLCT =	Low current MS13DCT
	MS14DCT =	MS14 (see above), direct current, w/ thermal lockout
	MS14DCLCT =	Low current MS14DCT

BOX 11

Additional Options

Omit	= None
N	= No-Element Indicator (not available w/ KCN50 or GKC50 housings w/ indicator in cap)
G509	= Dirt Alarm and drain opposite standard
G588	= Electric Switch and drain opposite standard

NOTES:

Box 2. Number of elements must equal 1 when using KK or 27K elements. Replacement element part numbers are identical to contents of Boxes 2, 3, 4 and 5. Double and triple stacking of K-size elements can be replaced by single KK and 27K elements, respectively. ZW media not available in 27K length. For standard elements, a plastic connector SAP P/N: 7630900 (LF-1997) is used to connect two or three K elements. For high collapse, a steel connector is required SAP P/N: 7608360 (LF-3255C).

Box 5. H.5 seal designation includes the following: EPR seals, stainless steel wire mesh on elements, and light oil coating on housing exterior. Viton® is a registered trademark of DuPont Dow Elastomers. Skydrol® is a registered trademark of Solutia Inc.

Box 7. For option F, bolt depth .75" (19 mm). For option O, O-rings included; hardware not included.

Box 8. When X is paired with a standard filter series, a standard bushing and spring plate will be used.

Box 10. Standard indicator setting for non-bypassing model is 50 psi unless otherwise specified.

Box 11. Option N, are not available with KCN50/GKC50. N option should be used in conjunction with dirt alarm.

Base-Ported Pressure Filter

MKF50/ MKC50

200 gpm
760 L/min
5000 psi
345 bar

Model No. of filter in photograph are MKF504K10PD5 and MKC504K10PD5.

Features and Benefits

- Base-ported high pressure dual filter manifold mounted
- Meets HF4 automotive standard
- Element changeout from top minimizes oil spillage
- Offered in pipe porting (contact factory for other porting options)
- No-Element indicator option available
- Available with non-bypass option with high collapse element
- Integral inlet and outlet female test points option available
- Double and triple stacking of K-size elements can be replaced by single KK or 27K-size elements
- G Available with quality-protected GeoSeal® Elements (GMKF50)

Filter Housing Specifications

Flow Rating:	Up to 200 gpm (760 L/min) for 150 SUS (32 cSt) fluids
Max. Operating Pressure:	5000 psi (345 bar)
Min. Yield Pressure:	15,000 psi (1035 bar), per NFPA T2.6.1
Rated Fatigue Pressure:	3500 psi (240 bar), per NFPA T2.6.1-2005
Temp. Range:	-20°F to 225°F (-29°C to 107°C)
Bypass Setting:	Cracking: 40 psi (2.8 bar) Optional Cracking: 50 psi (3.5 bar) Full Flow: 61 psi (4.2 bar) Non-bypassing model has a blocked bypass.
Porting Base & Cap: Element Case:	Ductile Iron Steel
Weight of MKF50-2K: Weight of MKF50-4K: Weight of MKF50-6K: Weight of MKC50-2K: Weight of MKC50-4K: Weight of MKC50-6K:	214.0 lbs. (97.3 kg) 243.0 lbs. (110.2 kg) 284.4 lbs. (129.0 kg) 216.0 lbs. (98.0 kg) 245.0 lbs. (111.1 kg) 286.4 lbs. (129.9 kg)
Element Change Clearance:	8.50" (215 mm) for 1K; 17.50" (445 mm) for KK; 26.5" (673 mm) for 27K

Fluid Compatibility

Type Fluid	Appropriate Schroeder Media
Petroleum Based Fluids	All E-Media (cellulose) and Z-Media® and ASP® Media (synthetic)
High Water Content	All Z-Media® and ASP® Media (synthetic)
Invert Emulsions	10 and 25 µ Z-Media® (synthetic), 10 µ ASP® Media (synthetic)
Water Glycols	3, 5, 10 and 25 µ Z-Media® (synthetic), and all ASP® Media
Phosphate Esters	All Z-Media® and ASP® Media (synthetic) with H (EPR) seal designation and 3 and 10 µ E media (cellulose) with H (EPR) seal designation
Skydrol®	3, 5, 10 and 25 µ Z-Media® (synthetic), and all ASP® Media (synthetic) with H.5 seal designation (EPR seals and stainless steel wire mesh in element, and light oil coating on housing exterior)

MKF50/ MKC50

Base-Ported Pressure Filter

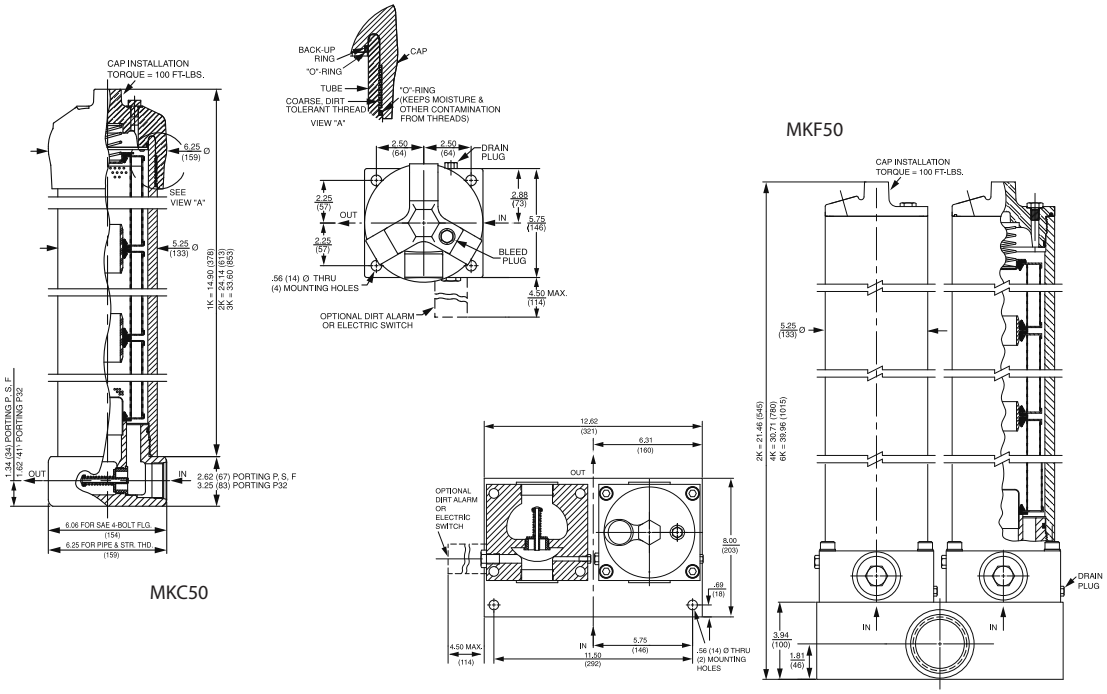

Metric dimensions in ( ).
Dimensions shown are inches (millimeters) for general information and overall envelope size only.
For complete dimensions please contact Schroeder Industries to request a certified print.

Element Performance Information & Dirt Holding Capacity

Element	Filtration Ratio Per ISO 4572/NFPA T3.10.8.8 Using automated particle counter (APC) calibrated per ISO 4402			Filtration Ratio per ISO 16889 Using APC calibrated per ISO 11171	
	$ß_x \geq 75$	$ß_x \geq 100$	$ß_x \geq 200$	$ß_x(c) \geq 200$	$ß_x(c) \geq 1000$
KZ1/KKZ1/27KZ1	<1.0	<1.0	<1.0	<4.0	4.2
KZ3/KKZ3/27KZ3	<1.0	<1.0	<2.0	<4.0	4.8
KZ5/KKZ5/27KZ5	2.5	3.0	4.0	4.8	6.3
KZ10/KKZ10/27KZ10	7.4	8.2	10.0	8.0	10.0
KZ25/KKZ25/27KZ25	18.0	20.0	22.5	19.0	24.0
KZW1	N/A	N/A	N/A	<4.0	<4.0
KZW3/KKZW3	N/A	N/A	N/A	4.0	4.8
KZW5/KKZW5	N/A	N/A	N/A	5.1	6.4
KZW10/KKZW10	N/A	N/A	N/A	6.9	8.6
KZW25/KKZW25	N/A	N/A	N/A	15.4	18.5
KZX3/KKZX3/27KZX3	<1.0	<1.0	<2.0	4.7	5.8
KZX10/KKZX10/27KZX10	7.4	8.2	10.0	8.0	9.8

Element	DHC (gm)	Element	DHC (gm)	Element	DHC (gm)	Element	DHC (gm)	Element	DHC (gm)
KZ1	112	KKZ1	224	27KZ1	336	KZW1	61		
KZ3	115	KKZ3	230	27KZ3	345	KZW3	64	KKZW3	128
KZ5	119	KKZ5	238	27KZ5	357	KZW5	63	KKZW5	126
KZ10	108	KKZ10	216	27KZ10	324	KZW10	57	KKZW10	114
KZ25	93	KKZ25	186	27KZ25	279	KZW25	79	KKZW25	158
KZX3	81*	KKZX3	163*	27KZX3	249*				
KZX10	90*	KKZX10	182*	27KZX10	279*				

* Based on 100 psi terminal pressure

Element Collapse Rating: 150 psid (10 bar) for standard elements
3000 psid (210 bar) for high collapse (ZX) versions

Flow Direction: Outside In

Element Nominal Dimensions: K: 3.9" (99 mm) O.D. x 9.0" (230 mm) long
KK: 3.9" (99 mm) O.D. x 18.0" (460 mm) long
27K: 3.9" (99 mm) O.D. x 27.0" (690 mm) long

Pressure Drop Information

Based on Flow Rate and Viscosity

$\Delta P_{housing}$

MKF50/MKC50 $\Delta P_{housing}$ for fluids with sp gr (specific gravity) = 0.86:

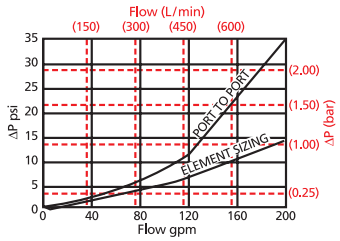

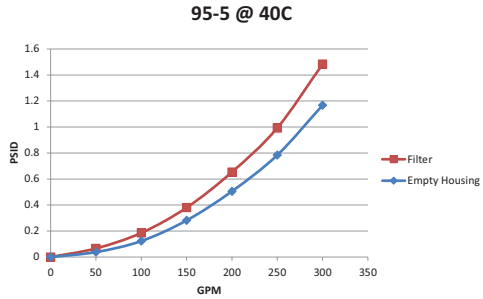

$\Delta P_{element}$

4KZ/2KZ

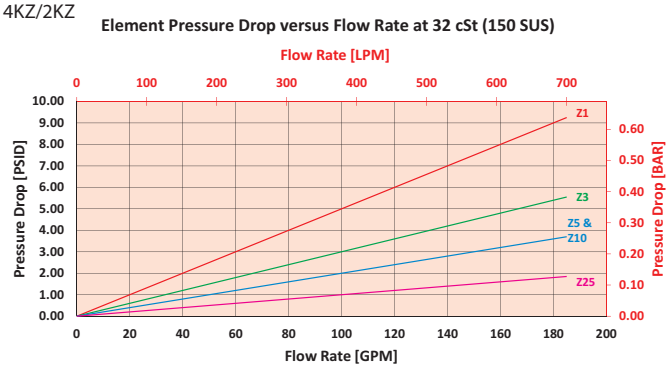

6KZ/2-27KZ

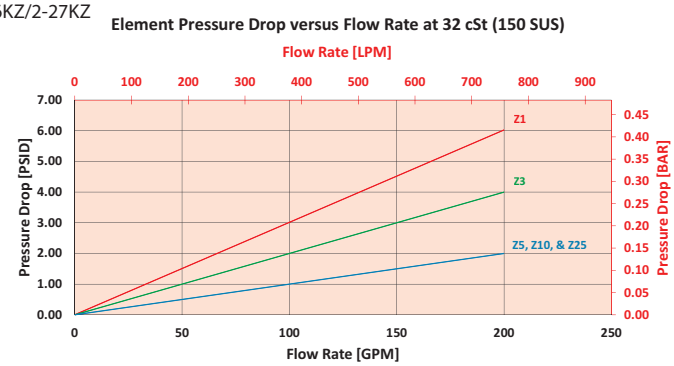

$$\Delta P_{filter} = \Delta P_{housing} + (\Delta P_{element} * V_f)$$

Exercise:

Determine ΔP_{filter} at 100 gpm (379 L/min) for MKF504KZ10PD5 using 160 SUS (34 cSt) fluid.

Use the housing pressure curve to determine $\Delta P_{housing}$ at 100 gpm. In this case, $\Delta P_{housing}$ is 8 psi (.55 bar) on the graph for the MKF50 housing.

Use the element pressure curve to determine $\Delta P_{element}$ at 100 gpm. In this case, $\Delta P_{element}$ is 8 psi (.14 bar) according to the graph for the KZ10 element.

Because the viscosity in this sample is 160 SUS (34 cSt), we determine the Viscosity Factor (V_f) by dividing the Operating Fluid Viscosity with the Standard Viscosity of 150 SUS (32 cSt). To best determine your Operating Fluid Viscosity, please reference the chart in Appendix D.

Finally, the overall filter pressure differential, ΔP_{filter}, is calculated by adding $\Delta P_{housing}$ with the true element pressure differential, ($\Delta P_{element} * V_f$). The $\Delta P_{element}$ from the graph has to be multiplied by the viscosity factor to get the true pressure differential across the element.

Solution:

$\Delta P_{housing}$ = 8 psi [.55 bar] | $\Delta P_{element}$ = 2 psi [.14 bar]

V_f = 160 SUS (34 cSt) / 150 SUS (32 cSt) = 1.1

ΔP_{filter} = 8 psi + (2 psi * 1.1) = 10.2 psi

OR

ΔP_{filter} = .55 bar + (.14 bar * 1.1) = .70 bar

Note:
If your element is not graphed, use the following equation:
$\Delta P_{element}$ = Flow Rate x ΔP_f Plug this variable into the overall pressure drop equation.

Ele.	ΔP	Ele.	ΔP	Ele.	ΔP
2KZ1	0.10	2K3	0.12	4K3/ KK3	0.06
2KZ3	0.05	2K10	0.05	4K10/ KK10	0.02
2KZ5	0.04	2K25	0.01	4K25/ KK25	0.01
2KZ10	0.03	2KAS3	0.05	4KAS3/ KKAS3	0.03
2KZ25	0.02	2KAS5	0.04	4KAS5/ KKAS5	0.02
KZW1	0.43	2KAS10	0.03	4KAS10/ KKAS10	0.02
KZW3	0.32	2KZX10	0.11	4KZX10	0.06
KZX5	0.28	2KZW3	0.16	6KAS3/ 27KAS3	0.02
KZW10	0.23	2KZW5	0.14	6KAS5/ 27KAS5	0.01
KZW25	0.14	2KZW10	0.12	6KAS10/ 27KAS10	0.01
		2KZW25	0.07	6KZX10	0.04

MKF50/ MKC50

Base-Ported Pressure Filter

Filter Model Number Selection

How to Build a Valid Model Number for a Schroeder MFK50:

BOX 1	BOX 2	BOX 3	BOX 4	BOX 5	BOX 6	BOX 7	BOX 8	BOX 9	BOX 10
MKF50 –	–	–	–	–	–	–	–	–	–

BOX 1	BOX 2	BOX 3	BOX 4	BOX 5	BOX 6	BOX 7	BOX 8	BOX 9	BOX 10	
MKF50 –	2K –	Z –	10 –	–	P –	–	–	D5 –	–	= MKF502KZ10PD5

BOX 1 — Filter Series

- MKF50
- MKFN50 (Non-bypassing: requires ZX high collapse elements)
- GMKF50 (GeoSeal®)
- MKC50
- MKCN50 (Non-bypassing: requires ZX high collapse elements)
- WKC50 (Water)

BOX 2 — Number & Size of Elements

2	K, KK, 27K
4	K
6	K
GeoSeal® Options	
2	KG, KKG, 27KG
4	KG
6	KG

BOX 3 — Media Type

Omit =	E Media (Cellulose) (MKF50 only)
AS =	Anti-Stat Media (synthetic)
Z =	Excellement® Z-Media® (synthetic)
ZX =	Excellement® Z-Media® (High Collapse centertube) (MKFN50 Only)
ZW =	Aqua-Excellement ZW Media (MKF50 Only)
W =	W Media (water removal)
M =	Media (reusable metal mesh) (MKF50 & MKFN50 Only)

BOX 4 — Micron Rating

1	= 1 Micron	(DZ, Z, ZW, ZX media)
3	= 3 Micron	(AS,DZ, E, Z, ZW, ZX media)
5	= 5 Micron	(AS, DZ, Z, ZW, ZX media)
10	= 10 Micron	(AS, DZ, E, M, Z, ZW, ZX media)
25	= 25 Micron	(E, DZ, M, Z, ZW, ZX media)
60	= 60 Micron	(M media)
150	= 150 Micron	(M media)
260	= 260 Micron	(M media)

BOX 5 — Seal Material

Omit	= Buna N
V	= Viton®
H	= EPR
H.5	= Skydrol® compatibility

BOX 6 — Porting

P	= 2½" NPTF
F40	= 2½" SAE 4-bolt flange Code 61
F32	= 2" 4 SAE bolt flange Code 61
P32	= 2" NPTF
B32	= ISO 228 G-2"

BOX 7 — Bypass

Omit	= None
X	= Blocked bypass
50	= 50 PSI Bypass (Omit Box 7 if a non-bypassing filter is used)

BOX 8 — Test points

Omit	= None
L	= Two ¼" NPTF inlet and outlet female test ports
U	= Series 1215 7/16 UNF Schroeder Check Test Point installed in cap (upstream)

BOX 9 — Dirt Alarm® Options

None	Omit =	None
Visual	D =	Pointer
	D5 =	Visual pop-up
	D5C =	D5 in cap
	D9 =	All stainless D5
Visual with Thermal Lockout	D8 =	Visual w/ thermal lockout
	D8C =	D8 in cap
Electrical	MS5 =	Electrical w/ 12 in. 18 gauge 4-conductor cable
	MS5LC =	Low current MS5
	MS10 =	Electrical w/ DIN connector (male end only)
	MS10LC =	Low current MS10
	MS11 =	Electrical w/ 12 ft. 4-conductor wire
	MS12 =	Electrical w/ 5 pin Brad Harrison connector (male end only)
	MS12LC =	Low current MS12
	MS16 =	Electrical w/ weather-packed sealed connector
	MS16LC =	Low current MS16
	MS17LC =	Electrical w/ 4 pin Brad Harrison male connector
Electrical with Thermal Lockout	MS5T =	MS5 (see above) w/ thermal lockout
	MS5LCT =	Low current MS5T
	MS10T =	MS10 (see above) w/ thermal lockout
	MS10LCT =	Low current MS10T
	MS12T =	MS12 (see above) w/ thermal lockout
	MS12LCT =	Low current MS12T
	MS16T =	MS16 (see above) w/ thermal lockout
	MS16LCT =	Low current MS16T
	MS17LCT =	Low current MS17T
Electrical Visual	MS =	Cam operated switch w/ ½" conduit female connection
	MS13 =	Supplied w/ threaded connector & light
	MS14 =	Supplied w/ 5 pin Brad Harrison connector & light (male end)
Electrical Visual with Thermal Lockout	MS13DCT =	MS13 (see above), direct current, w/ thermal lockout
	MS13DCLCT =	Low current MS13DCT
	MS14DCT =	MS14 (see above), direct current, w/ thermal lockout
	MS14DCLCT =	Low current MS14DCT

BOX 10 — Additional Options

Omit	= None
N	= No-Element Indicator (not available w/ MKFN30/MKCN50 or housings w/ indicator in cap)

NOTES:

Box 2. Number of elements must equal 2 when using KK or 27K elements. Replacement element part numbers are identical to contents of Boxes 2, 3, 4 and 5. Double and triple stacking of K-size elements can be replaced by single KK and 27K elements, respectively. ZW media not available in 27K length. For standard elements, a plastic connector SAP P/N: 7630900 (LF-1997) is used to connect two or three K elements. For high collapse, a steel connector is required SAP P/N: 7608360 (LF-3255C).

Box 5. H.5 seal designation includes the following: EPR seals, stainless steel wire mesh on elements, and light oil coating on housing exterior. Viton® is a registered trademark of DuPont Dow Elastomers. Skydrol® is a registered trademark of Solutia Inc.

Box 7. When X is paired with a standard filter series, a standard bushing and spring plate will be used.

Box 9. Standard indicator setting for non-bypassing model is 50 psi unless otherwise specified.

Box 10. N option should be used in conjunction with dirt alarm.

Base-Ported Pressure Filter KC65

Model No. of filter in photograph is KC651K10FD9.

Features and Benefits

- Base-ported high pressure filter
- Patented dirt-tolerant cap design
- Can be installed in vertical or horizontal position
- Meets HF4 automotive standard
- Element changeout from top minimizes oil spillage
- Offered in flanged porting
- No-Element indicator option available
- Available with non-bypass option with high collapse element
- Integral inlet and outlet female test points option available
- Double and triple stacking of K-size element can be replaced by single KK or 27K-size element
- G Available with quality-protected GeoSeal® Elements (GKC65)

100 gpm
380 L/min
6500 psi
450 bar

Filter Housing Specifications

Flow Rating:	Up to 100 gpm (380 L/min) for 150 SUS (32 cSt) fluids
Max. Operating Pressure:	6500 psi (450 bar)
Min. Yield Pressure:	19,500 psi (1345 bar), per NFPA T2.6.1
Rated Fatigue Pressure:	5000 psi (345 bar), per NFPA T2.6.1-2005
Temp. Range:	-20°F to 225°F (-29°C to 107°C)
Bypass Setting:	Cracking: 40 psi (2.8 bar) Full Flow: 75 psi (5.2 bar) Non-bypassing model has a blocked bypass.
Porting Base & Cap: Element Case:	Ductile Iron Steel
Weight of KC65-1K: Weight of KC65-2K: Weight of KC65-3K:	80 lbs. (36.3 kg) 102 lbs. (46.3 kg) 124 lbs. (56.3 kg)
Element Change Clearance:	8.50" (215 mm) for 1K; 17.50" (445 mm) for KK; 26.5" (673 mm) for 27K

Fluid Compatibility

Type Fluid	Appropriate Schroeder Media
Petroleum Based Fluids	All E media (cellulose) and Z-Media® (synthetic)
High Water Content	All Z-Media® and ASP® Media (synthetic)
Invert Emulsions	10 and 25 µ Z-Media® (synthetic), 10 µ ASP® Media (synthetic)
Water Glycols	3, 5, 10 and 25 µ Z-Media® (synthetic) and all ASP® Media (synthetic)
Phosphate Esters	All Z-Media® and ASP® Media (synthetic) with H (EPR) seal designation and 3 and 10 µ E media (cellulose) with H (EPR) seal designation
Skydrol®	3, 5, 10 and 25 µ Z-Media® (synthetic) and ASP® Media (synthetic) with H.5 seal designation (EPR seals and stainless steel wire mesh in element, and light oil coating on housing exterior)

KC65 Base-Ported Pressure Filter

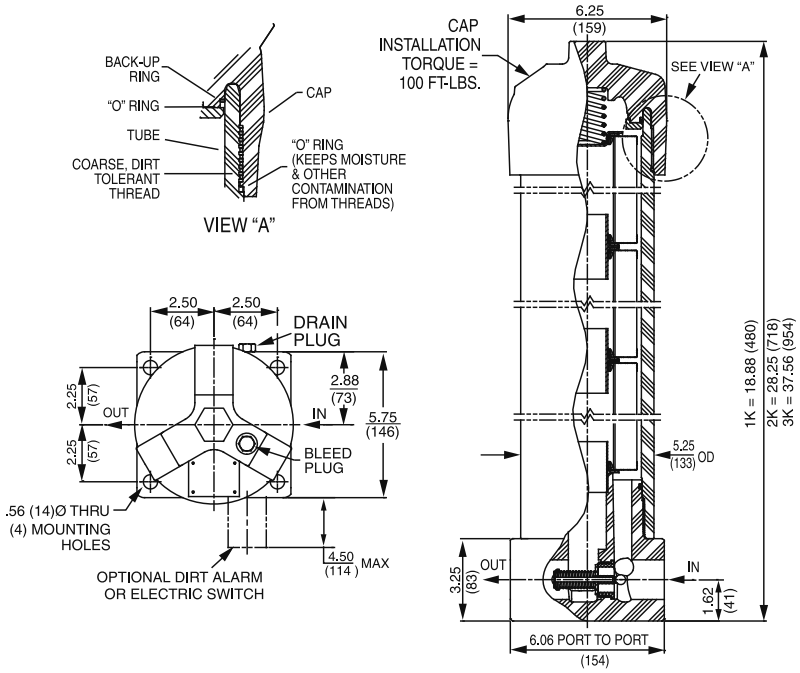

Metric dimensions in ( ).
Dimensions shown are inches (millimeters) for general information and overall envelope size only.
For complete dimensions please contact Schroeder Industries to request a certified print.

Element Performance Information & Dirt Holding Capacity

	Filtration Ratio Per ISO 4572/ NFPA T3.10.8.8 Using automated particle counter (APC) calibrated per ISO 4402			Filtration Ratio per ISO 16889 Using APC calibrated per ISO 11171	
Element	$ß_x \geq 75$	$ß_x \geq 100$	$ß_x \geq 200$	$ß_x(c) \geq 200$	$ß_x(c) \geq 1000$
KZ1/KKZ1/27KZ1	<1.0	<1.0	<1.0	<4.0	4.2
KZ3/KKZ3/27KZ3	<1.0	<1.0	<2.0	<4.0	4.8
KZ5/KKZ5/27KZ5	2.5	3.0	4.0	4.8	6.3
KZ10/KKZ10/27KZ10	7.4	8.2	10.0	8.0	10.0
KZ25/KKZ25/27KZ25	18.0	20.0	22.5	19.0	24.0
KZW1	N/A	N/A	N/A	<4.0	<4.0
KZW3/KKZW3	N/A	N/A	N/A	4.0	4.8
KZW5/KKZW5	N/A	N/A	N/A	5.1	6.4
KZW10/KKZW10	N/A	N/A	N/A	6.9	8.6
KZW25/KKZW25	N/A	N/A	N/A	15.4	18.5
KZX3/KKZX3/27KZX3	<1.0	<1.0	<2.0	4.7	5.8
KZX10/KKZX10/27KZX10	7.4	8.2	10.0	8.0	9.8

Element	DHC (gm)	Element	DHC (gm)	Element	DHC (gm)	Element	DHC (gm)	Element	DHC (gm)
KZ1	112	KKZ1	224	27KZ1	336	KZW1	61		
KZ3	115	KKZ3	230	27KZ3	345	KZW3	64	KKZW3	128
KZ5	119	KKZ5	238	27KZ5	357	KZW5	63	KKZW5	126
KZ10	108	KKZ10	216	27KZ10	324	KZW10	57	KKZW10	114
KZ25	93	KKZ25	186	27KZ25	279	KZW25	79	KKZW25	158
KZX3	81*	KKZX3	163*	27KZX3	249*				
KZX10	90*	KKZX10	182*	27KZX10	279*				

* Based on 100 psi terminal pressure

Element Collapse Rating: 150 psid (10 bar) for standard elements
3000 psid (210 bar) for high collapse (ZX) versions

Flow Direction: Outside In

Element Nominal Dimensions:
K: 3.9" (99 mm) O.D. x 9.0" (230 mm) long
KK: 3.9" (99 mm) O.D. x 18.0" (460 mm) long
27K: 3.9" (99 mm) O.D. x 27.0" (690 mm) long

Pressure Drop Information

Based on Flow Rate and Viscosity

$\Delta P_{housing}$

KC65 $\Delta P_{housing}$ for fluids with sp gr (specific gravity) = 0.86:

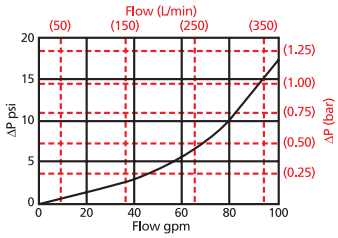

$\Delta P_{element}$

KZ/KGZ

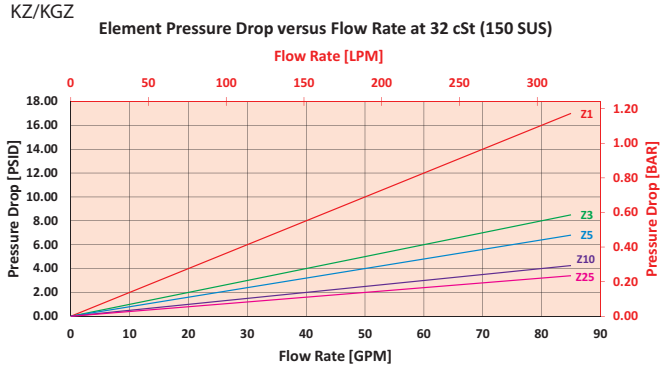

2KZ/KKZ

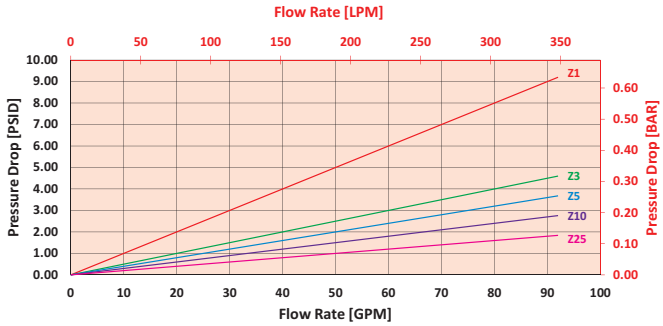

$$\Delta P_{filter} = \Delta P_{housing} + (\Delta P_{element} * V_f)$$

Exercise:

Determine ΔP_{filter} at 50 gpm (189.5 L/min) for KC651KZ10FD9 using 160 SUS (34 cSt) fluid.

Use the housing pressure curve to determine $\Delta P_{housing}$ at 50 gpm. In this case, $\Delta P_{housing}$ is 4 psi (.27 bar) on the graph for the KC65 housing.

Use the element pressure curve to determine $\Delta P_{element}$ at 50 gpm. In this case, $\Delta P_{element}$ is 2.5 psi (.17 bar) according to the graph for the KZ10 element.

Because the viscosity in this sample is 160 SUS (34 cSt), we determine the Viscosity Factor (V_f) by dividing the Operating Fluid Viscosity with the Standard Viscosity of 150 SUS (32 cSt). To best determine your Operating Fluid Viscosity, please reference the chart in Appendix D.

Finally, the overall filter pressure differential, ΔP_{filter}, is calculated by adding $\Delta P_{housing}$ with the true element pressure differential, ($\Delta P_{element} * V_f$). The $\Delta P_{element}$ from the graph has to be multiplied by the viscosity factor to get the true pressure differential across the element.

Solution:

$\Delta P_{housing}$ = 4 psi [.27 bar] | $\Delta P_{element}$ = 2.5 psi [.17 bar]

V_f = 160 SUS (34 cSt) / 150 SUS (32 cSt) = 1.1

ΔP_{filter} = 4 psi + (2.5 psi * 1.1) = 6.8 psi

OR

ΔP_{filter} = .27 bar + (.17 bar * 1.1) = .46 bar

Note:
If your element is not graphed, use the following equation:
$\Delta P_{element}$ = Flow Rate x $\Delta P_{f.}$ Plug this variable into the overall pressure drop equation.

Ele.	ΔP	Ele.	ΔP	Ele.	ΔP
K3	0.25	2K3/ KK3	0.12	3KZ1/ 27KZ1	0.05
K10	0.09	2K10/ KK10	0.05	3KZ3/ 27KZ3	0.03
K25	0.02	2K25/ KK25	0.01	3KZ5/ 27KZ5	0.02
KAS3	0.10	2KAS3/ KKAS3	0.05	3KZ10/ 27KZ10	0.02
KAS5	0.08	2KAS5/ KKAS5	0.04	3KZ25/ 27KZ25	0.01
KAS10	0.05	2KAS10/ KKAS10	0.03	3K3	0.08
KZX10	0.22	2KZX10/ KKZX10	0.11	3K10	0.03
KZW1	0.43	2KZW1	-	3K25	0.01
KZW3	0.32	2KZW3/ KKZX3	0.16	3KAS3/ 27KAS3	0.03
KZW5	0.28	2KZW5/ KKZX5	0.14	3KAS5/ 27KAS5	0.02
KZW10	0.23	2KZW10/ KKZX10	0.12	3KAS10/ 27KAS10	0.02
KZW25	0.14	2KZW25/ KKZX25	0.07	3KZX10/ 27KZX10	0.07

KC65 Base-Ported Pressure Filter

Filter Model Number Selection

How to Build a Valid Model Number for a Schroeder KC65:

BOX 1	BOX 2	BOX 3	BOX 4	BOX 5	BOX 6	BOX 7	BOX 8	BOX 9	BOX 10	BOX 11
KC65 –	–	–	–	–	–	–	–	–	–	–

BOX 1	BOX 2	BOX 3	BOX 4	BOX 5	BOX 6	BOX 7	BOX 8	BOX 9	BOX 10	BOX 11	
KC65 –	1K –	Z –	10 –	–	–	F –	–	–	D5 –	–	= KC651KZ10FED5

BOX 1

Filter Series

- KC65
- KCN65 (Non-bypassing: requires ZX high collapse elements)
- GKC65 (GeoSeal®)

BOX 2

Number & Size of Elements

1	K, KK, 27K
2	K
GeoSeal® Options	
1	KG, KKG, 27KG
2	KG
3	KG

BOX 3

Media Type

Omit =	E Media (Cellulose)
AS =	Anti-Stat Media (synthetic)
Z =	Excellement® Z-Media® (synthetic)
ZX =	Excellement® Z-Media® (High Collapse centertube) (KCN65 Only)
ZW =	Aqua-Excellement ZW Media (KC65 Only)
W =	W Media (water removal)
M =	Media (reusable metal mesh) (KC65 & KCN65 Only)

BOX 4

Micron Rating

1 = 1 Micron	(Z, ZW, ZX media)
3 = 3 Micron	(AS, E, Z, ZW, ZX media)
5 = 5 Micron	(AS, Z, ZW, ZX media)
10 = 10 Micron	(AS, E, M, Z, ZW, ZX media)
25 = 25 Micron	(E, M, Z, ZW, ZX media)
60 = 60 Micron	(M media)
150 = 150 Micron	(M media)
260 = 260 Micron	(M media)

BOX 5

Seal Material

Omit	= Buna N
V	= Viton®
H	= EPR
H.5	= Skydrol® compatibility

BOX 6

Magnet Option

Omit	= None
M	= Magnet inserts (not available w/ indicator in cap)

BOX 7

Porting

F = 1 ½" SAE 4-bolt flange Code 62

BOX 8

Bypass

Omit	= 40 PSI Bypass
X	= Blocked bypass
50	= 50 psi bypass setting

(Omit Box 8 if a KCN65 is selected)

BOX 9

Test Points

Omit	= None
L	= Two ¼" NPTF inlet & outlet female test ports
U	= Series 1215 7⁄16 UNF Schroeder Check Test Point installed in cap (upstream)
UU	= Series 1215 7⁄16 UNF Schroeder Check Test Point installed in block (upstream and downstream)

BOX 10

Dirt Alarm® Options

None	Omit =	None
Visual	D9 =	All stainless D5
Electrical	MS5SS =	Electrical w/ 12 in. 18 gauge 4-conductor cable
	MS5SSLC =	Low current MS5
	MS10SS =	Electrical w/ DIN connector (male end only)
	MS10SSLC =	Low current MS10
	MS11SS =	Electrical w/ 12 ft. 4-conductor wire
	MS12SS=	Electrical w/ 5 pin Brad Harrison connector (male end only)
	MS12SSLC =	Low current MS12
	MS16SS =	Electrical w/ weather-packed sealed connector
	MS16SSLC =	Low current MS16
	MS17SSLC =	Electrical w/ 4 pin Brad Harrison male connector
Electrical with Thermal Lockout	MS5T =	MS5 (see above) w/ thermal lockout
	MS5LCT =	Low current MS5T
	MS10T =	MS10 (see above) w/ thermal lockout
	MS10LCT =	Low current MS10T
	MS12T =	MS12 (see above) w/ thermal lockout
	MS12LCT =	Low current MS12T
	MS16T =	MS16 (see above) w/ thermal lockout
	MS16LCT =	Low current MS16T
	MS17LCT =	Low current MS17T
Electrical Visual	MS =	Cam operated switch w/ ½" conduit female connection
	MS13DC =	Supplied w/ threaded connector & light
	MS14DC =	Supplied w/ 5 pin Brad Harrison connector & light (male end)
Electrical Visual with Thermal Lockout	MS13DCT =	MS13 (see above), direct current, w/ thermal lockout
	MS13DCLCT =	Low current MS13DCT
	MS14DCT =	MS14 (see above), direct current, w/ thermal lockout
	MS14DCLCT =	Low current MS14DCT

BOX 11

Additional Options

Omit	= None
N	= No-Element Indicator (not available w/ KFN65 or housings w/ indicator in cap)
G509	= Dirt Alarm and drain opposite standard

NOTES:

Box 2. Number of elements must equal 1 when using KK or 27K elements. Replacement element part numbers are identical to contents of Boxes 2, 3, 4 and 5. Double and triple stacking of K-size elements can be replaced by single KK and 27K elements, respectively. ZW media not available in 27K length. For standard elements, a plastic connector SAP P/N: 7630900 (LF-1997) is used to connect two or three K elements. For high collapse, a steel connector is required SAP P/N: 7608360 (LF-3255C).

Box 5. H.5 seal designation includes the following: EPR seals, stainless steel wire mesh on elements, and light oil coating on housing exterior. Viton® is a registered trademark of DuPont Dow Elastomers. Skydrol® is a registered trademark of Solutia Inc.

Box 7. For option F, bolt depth 1.12" (30 mm).

Box 8. When X is paired with a standard filter series, a standard bushing and spring plate will be used.

Box 10. Standard indicator setting for non-bypassing model is 50 psi unless otherwise specified.

Box 11. Option N is not available with KCN65. N option should be used in conjunction with dirt alarm.

Base-Ported Pressure Filter MKC65

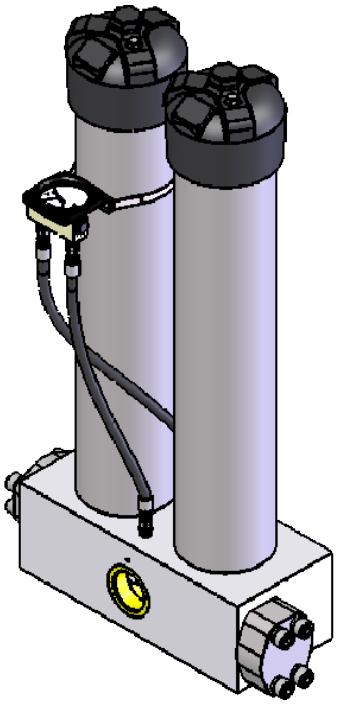

Model No. of filter in photograph is MKC654K10BD5.

Features and Benefits

- Base-ported high pressure dual filter manifold mounted
- Meets HF4 automotive standard
- Element changeout from top minimizes oil spillage
- Offered in pipe porting (contact factory for other porting options)
- No-Element indicator option available
- Available with non-bypass option with high collapse element
- Integral inlet and outlet female test points option available
- Double and triple stacking of K-size elements can be replaced by single KK or 27K-size elements

200 gpm
760 L/min
300 gpm*
1,136 L/min*
6000 psi
413 bar

Filter Housing Specifications

Flow Rating:	Up to 200 gpm (760 L/min) for 150 SUS (32 cSt) fluids Up to 300 gpm (1,136 L/min) for Water/Oil Emulsions
Max. Operating Pressure:	6000 psi (413 bar)
Min. Yield Pressure:	18,000 psi (1240 bar), per NFPA T2.6.1
Rated Fatigue Pressure:	4500 psi (310 bar), per NFPA T2.6.1-2005
Temp. Range:	-20°F to 225°F (-29°C to 107°C)
Bypass Setting:	Cracking: 40 psi (2.8 bar) Optional Cracking: 50 psi (3.5 bar) Full Flow: 61 psi (4.2 bar) Non-bypassing model has a blocked bypass.
Porting Base & Cap: Element Case:	Ductile Iron Steel
Weight of MKC65-2K: Weight of MKC65-4K: Weight of MKC65-6K:	216.0 lbs. (98.0 kg) 245.0 lbs. (111.1 kg) 286.4 lbs. (129.9 kg)
Element Change Clearance:	8.50" (215 mm) for 1K; 17.50" (445 mm) for KK; 26.5" (673 mm) for 27K

Fluid Compatibility

Type Fluid	Appropriate Schroeder Media
Petroleum Based Fluids	All E-Media (cellulose) and Z-Media® and ASP® Media (synthetic)
High Water Content	All Z-Media® and ASP® Media (synthetic)
Invert Emulsions	10 and 25 µ Z-Media® (synthetic), 10 µ ASP® Media (synthetic)
Water Glycols	3, 5, 10 and 25 µ Z-Media® (synthetic), and all ASP® Media
Phosphate Esters	All Z-Media® and ASP® Media (synthetic) with H (EPR) seal designation and 3 and 10 µ E media (cellulose) with H (EPR) seal designation
Skydrol®	3, 5, 10 and 25 µ Z-Media® (synthetic), and all ASP® Media (synthetic) with H.5 seal designation (EPR seals and stainless steel wire mesh in element, and light oil coating on housing exterior)

*Rated for Water/Oil Emulsions

MKC65 Base-Ported Pressure Filter

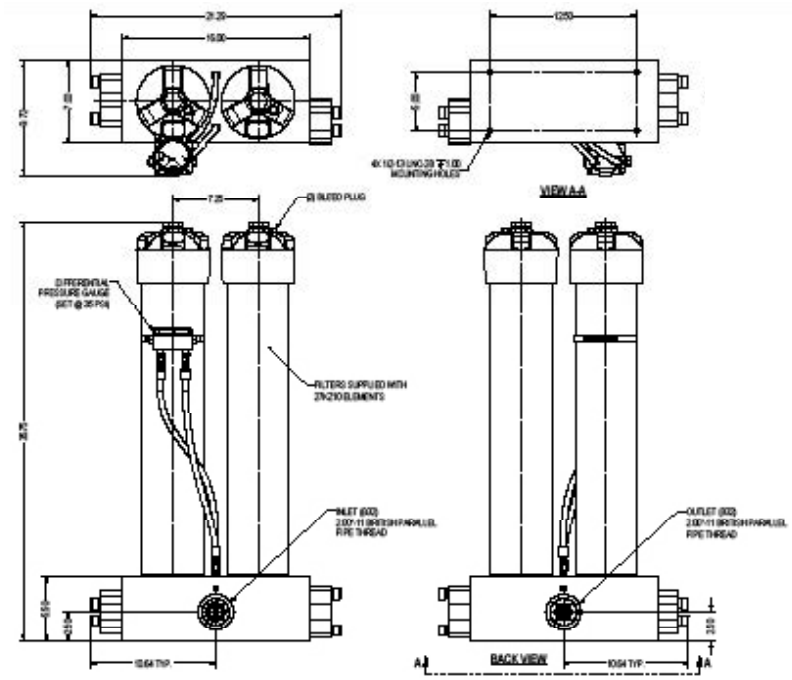

Metric dimensions in ( ).
Dimensions shown are inches (millimeters) for general information and overall envelope size only.
For complete dimensions please contact Schroeder Industries to request a certified print.

Element Performance Information & Dirt Holding Capacity

Element	Filtration Ratio Per ISO 4572/NFPA T3.10.8.8 Using automated particle counter (APC) calibrated per ISO 4402			Filtration Ratio per ISO 16889 Using APC calibrated per ISO 11171	
	$ß_x \geq 75$	$ß_x \geq 100$	$ß_x \geq 200$	$ß_x(c) \geq 200$	$ß_x(c) \geq 1000$
KZ1/KKZ1/27KZ1	<1.0	<1.0	<1.0	<4.0	4.2
KZ3/KKZ3/27KZ3	<1.0	<1.0	<2.0	<4.0	4.8
KZ5/KKZ5/27KZ5	2.5	3.0	4.0	4.8	6.3
KZ10/KKZ10/27KZ10	7.4	8.2	10.0	8.0	10.0
KZ25/KKZ25/27KZ25	18.0	20.0	22.5	19.0	24.0
KZW1	N/A	N/A	N/A	<4.0	<4.0
KZW3/KKZW3	N/A	N/A	N/A	4.0	4.8
KZW5/KKZW5	N/A	N/A	N/A	5.1	6.4
KZW10/KKZW10	N/A	N/A	N/A	6.9	8.6
KZW25/KKZW25	N/A	N/A	N/A	15.4	18.5
KZX3/KKZX3/27KZX3	<1.0	<1.0	<2.0	4.7	5.8
KZX10/KKZX10/27KZX10	7.4	8.2	10.0	8.0	9.8

Element	DHC (gm)	Element	DHC (gm)	Element	DHC (gm)	Element	DHC (gm)	Element	DHC (gm)
KZ1	112	KKZ1	224	27KZ1	336	KZW1	61		
KZ3	115	KKZ3	230	27KZ3	345	KZW3	64	KKZW3	128
KZ5	119	KKZ5	238	27KZ5	357	KZW5	63	KKZW5	126
KZ10	108	KKZ10	216	27KZ10	324	KZW10	57	KKZW10	114
KZ25	93	KKZ25	186	27KZ25	279	KZW25	79	KKZW25	158
KZX3	81*	KKZX3	163*	27KZX3	249*				
KZX10	90*	KKZX10	182*	27KZX10	279*				

* Based on 100 psi termianl pressure

Element Collapse Rating: 150 psid (10 bar) for standard elements
3000 psid (210 bar) for high collapse (ZX) versions

Flow Direction: Outside In

Element Nominal Dimensions: K: 3.9" (99 mm) O.D. x 9.0" (230 mm) long
KK: 3.9" (99 mm) O.D. x 18.0" (460 mm) long
27K: 3.9" (99 mm) O.D. x 27.0" (690 mm) long

Pressure Drop Information

Based on Flow Rate and Viscosity

$\Delta P_{housing}$

MKC65 $\Delta P_{housing}$ for fluids with sp gr (specific gravity) = 0.86:

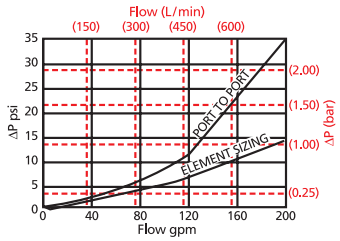

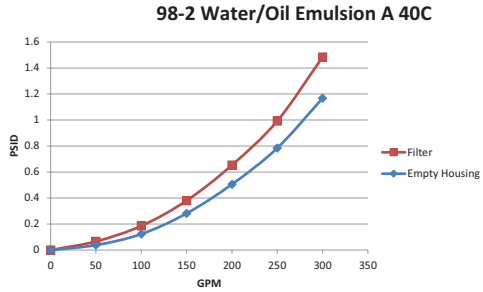

$\Delta P_{element}$

4KZ/2KZ

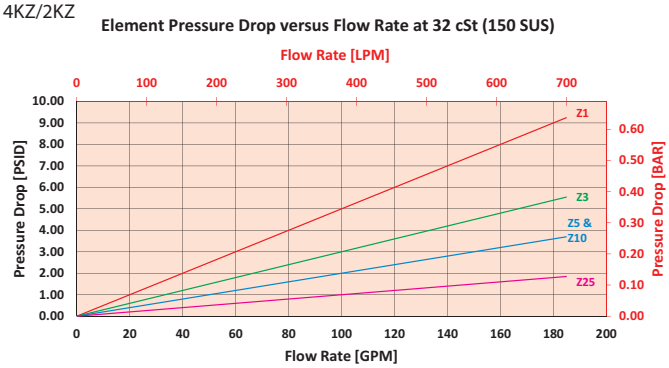

6KZ/2-27KZ

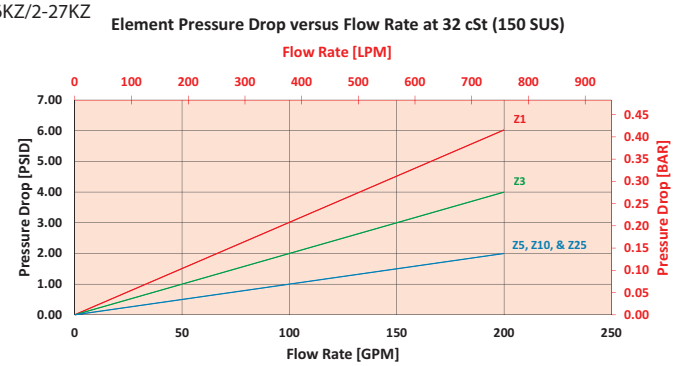

$$\Delta P_{filter} = \Delta P_{housing} + (\Delta P_{element} * V_f)$$

Exercise:

Determine ΔP_{filter} at 100 gpm (379 L/min) for MKC654KZ10PD5 using 160 SUS (34 cSt) fluid.

Use the housing pressure curve to determine $\Delta P_{housing}$ at 100 gpm. In this case, $\Delta P_{housing}$ is 8 psi (.55 bar) on the graph for the MKC65 housing.

Use the element pressure curve to determine $\Delta P_{element}$ at 100 gpm. In this case, $\Delta P_{element}$ is 8 psi (.14 bar) according to the graph for the KZ10 element.

Because the viscosity in this sample is 160 SUS (34 cSt), we determine the Viscosity Factor (V_f) by dividing the Operating Fluid Viscosity with the Standard Viscosity of 150 SUS (32 cSt). To best determine your Operating Fluid Viscosity, please reference the chart in Appendix D.

Finally, the overall filter pressure differential, ΔP_{filter}, is calculated by adding $\Delta P_{housing}$ with the true element pressure differential, ($\Delta P_{element} * V_f$). The $\Delta P_{element}$ from the graph has to be multiplied by the viscosity factor to get the true pressure differential across the element.

Solution:

$\Delta P_{housing}$ = 8 psi [.55 bar] | $\Delta P_{element}$ = 2 psi [.14 bar]

V_f = 160 SUS (34 cSt) / 150 SUS (32 cSt) = 1.1

ΔP_{filter} = 8 psi + (2 psi * 1.1) = 10.2 psi

OR

ΔP_{filter} = .55 bar + (.14 bar * 1.1) = .70 bar

Note:
If your element is not graphed, use the following equation:
$\Delta P_{element}$ = Flow Rate x ΔP_f Plug this variable into the overall pressure drop equation.

Ele.	ΔP	Ele.	ΔP	Ele.	ΔP
2KZ1	0.10	2K3	0.12	4K3/ KK3	0.06
2KZ3	0.05	2K10	0.05	4K10/ KK10	0.02
2KZ5	0.04	2K25	0.01	4K25/ KK25	0.01
2KZ10	0.03	2KAS3	0.05	4KAS3/ KKAS3	0.03
2KZ25	0.02	2KAS5	0.04	4KAS5/ KKAS5	0.02
KZW1	0.43	2KAS10	0.03	4KAS10/ KKAS10	0.02
KZW3	0.32	2KZX10	0.11	4KZX10	0.06
KZX5	0.28	2KZW3	0.16	6KAS3/ 27KAS3	0.02
KZW10	0.23	2KZW5	0.14	6KAS5/ 27KAS5	0.01
KZW25	0.14	2KZW10	0.12	6KAS10/ 27KAS10	0.01
		2KZW25	0.07	6KZX10	0.04

MKC65 Base-Ported Pressure Filter

Filter Model Number Selection

How to Build a Valid Model Number for a Schroeder MKC65:

BOX 1	BOX 2	BOX 3	BOX 4	BOX 5	BOX 6	BOX 7	BOX 8	BOX 9	BOX 10
MKC65 –	–	–	–	–	–	–	–	–	–

BOX 1	BOX 2	BOX 3	BOX 4	BOX 5	BOX 6	BOX 7	BOX 8	BOX 9	BOX 10	
MKC65 –	2K –	Z –	10 –	–	B –	–	–	D5 –	–	= MKC652KZ10BD5

BOX 1 — Filter Series

MKC65

BOX 2 — Number & Size of Elements

2	K, KK, 27K
4	K
6	K
GeoSeal® Options	
2	KG, KKG, 27KG
4	KG
6	KG

BOX 3 — Media Type

Omit =	E Media (Cellulose)
AS =	Anti-Stat Media (synthetic)
Z =	Excellement® Z-Media® (synthetic)
ZX =	Excellement® Z-Media® (High Collapse centertube)
ZW =	Aqua-Excellement ZW Media
W =	W Media (water removal)
M =	Media (reusable metal mesh)

BOX 4 — Micron Rating

1	= 1 Micron	(DZ, Z, ZW, ZX media)
3	= 3 Micron	(AS,DZ, E, Z, ZW, ZX media)
5	= 5 Micron	(AS, DZ, Z, ZW, ZX media)
10	= 10 Micron	(AS, DZ, E, M, Z, ZW, ZX media)
25	= 25 Micron	(E, DZ, M, Z, ZW, ZX media)
60	= 60 Micron	(M media)
150	= 150 Micron	(M media)
260	= 260 Micron	(M media)

BOX 5 — Seal Material

Omit	= Buna N
V	= Viton®
H	= EPR
H.5	= Skydrol® compatibility

BOX 6 — Porting Option

B = 2" BSPP

BOX 7 — Bypass

Omit	= 40 PSI Bypass
X	= Blocked bypass
50	= 50 PSI Bypass

(Omit Box 7 if non bypassing unit)

BOX 8 — Test Points

L	= Two ¼" NPTF inlet and outlet female test ports
U	= Series 1215 7/16 UNF Schroeder Check Test Point installed in cap (upstream)

BOX 9 — Dirt Alarm® Options

None	Omit =	None
Visual	D =	Pointer
	D5 =	Visual pop-up
	D5C =	D5 in cap
	D9 =	All stainless D5
	DPG =	Differential pressure gauge
Visual with Thermal Lockout	D8 =	Visual w/ thermal lockout
	D8C =	D8 in cap
Electrical	MS5 =	Electrical w/ 12 in. 18 gauge 4-conductor cable
	MS5LC =	Low current MS5
	MS10 =	Electrical w/ DIN connector (male end only)
	MS10LC =	Low current MS10
	MS11 =	Electrical w/ 12 ft. 4-conductor wire
	MS12 =	Electrical w/ 5 pin Brad Harrison connector (male end only)
	MS12LC =	Low current MS12
	MS16 =	Electrical w/ weather-packed sealed connector
	MS16LC =	Low current MS16
	MS17LC =	Electrical w/ 4 pin Brad Harrison male connector
Electrical with Thermal Lockout	MS5T =	MS5 (see above) w/ thermal lockout
	MS5LCT =	Low current MS5T
	MS10T =	MS10 (see above) w/ thermal lockout
	MS10LCT =	Low current MS10T
	MS12T =	MS12 (see above) w/ thermal lockout
	MS12LCT =	Low current MS12T
	MS16T =	MS16 (see above) w/ thermal lockout
	MS16LCT =	Low current MS16T
	MS17LCT =	Low current MS17T
Electrical Visual	MS =	Cam operated switch w/ ½" conduit female connection
	MS13 =	Supplied w/ threaded connector & light
	MS14 =	Supplied w/ 5 pin Brad Harrison connector & light (male end)
Electrical Visual with Thermal Lockout	MS13DCT =	MS13 (see above), direct current, w/ thermal lockout
	MS13DCLCT =	Low current MS13DCT
	MS14DCT =	MS14 (see above), direct current, w/ thermal lockout
	MS14DCLCT =	Low current MS14DCT

BOX 10 — Additional Options

Omit	= None
N	= No-Element Indicator

NOTES:

Box 2. Number of elements must equal 2 when using KK or 27K elements. Replacement element part numbers are identical to contents of Boxes 2, 3, 4 and 5. Double and triple stacking of K-size elements can be replaced by single KK and 27K elements, respectively. ZW media not available in 27K length. For standard elements, a plastic connector SAP P/N: 7630900 (LF-1997) is used to connect two or three K elements. For high collapse, a steel connector is required SAP P/N: 7608360 (LF-3255C).

Box 5. H.5 seal designation includes the following: EPR seals, stainless steel wire mesh on elements, and light oil coating on housing exterior. Viton® is a registered trademark of DuPont Dow Elastomers. Skydrol® is a registered trademark of Solutia Inc.

Box 7. When X is paired with a standard filter series, a standard bushing and spring plate will be used.

Box 9. Standard indicator setting for non-bypassing model is 50 psi unless otherwise specified.

Box 10. N option should be used in conjunction with dirt alarm.

Hydrostatic Top-Ported Pressure Filter

HS60/ MHS60

120 gpm
450 L/min
6000 psi
415 bar

Features and Benefits

- Full flow reverse flow check valve diverts flow past the element in hydrostatic applications
- Top-ported design capable of handling 100 gpm flow
- Offered in SAE straight thread and flange porting
- Thread on bowl with drain plug for easy element service
- 6000 psi cyclic
- Certified for Offshore Standard DNVGL-OS-D101 "Marine and Machinery Systems and Equipment"
- Contact factory for higher flow applications

Model No. of filters in photograph are HS6013HZ3F24 and MHS6013HZ3F24.

Filter Housing Specifications

Flow Rating:	Up to 120 gpm (450 L/min)
Max. Operating Pressure:	6000 psi (415 bar) only for flange ported models
Min. Yield Pressure:	Contact factory
Rated Fatigue Pressure:	6000 psi (415 bar) (only with 4-bolt flange porting)
Temp. Range:	-20°F to 225°F (-29°C to 107°C)
Bypass Setting:	Cracking: 87 psi (5.9 bar)
Porting Head: Element Case:	Ductile Iron Steel
Weight of HS60-13H: Weight of MHS60:	75 lbs. (34.2 kg) 160 lbs. (72.6 kg)
Element Change Clearance:	4.0" (103 mm)

Fluid Compatibility

Type Fluid	Appropriate Schroeder Media
High Water Content	All Z-Media® (synthetic)
Invert Emulsions	10 and 25 µ Z-Media® (synthetic)
Water Glycols	3, 5, 10 and 25 µ Z-Media® (synthetic)
Phosphate Esters	All Z-Media® (synthetic) with H (EPR) seal designation

HS60/ MHS60

Hydrostatic Top-Ported Pressure Filter

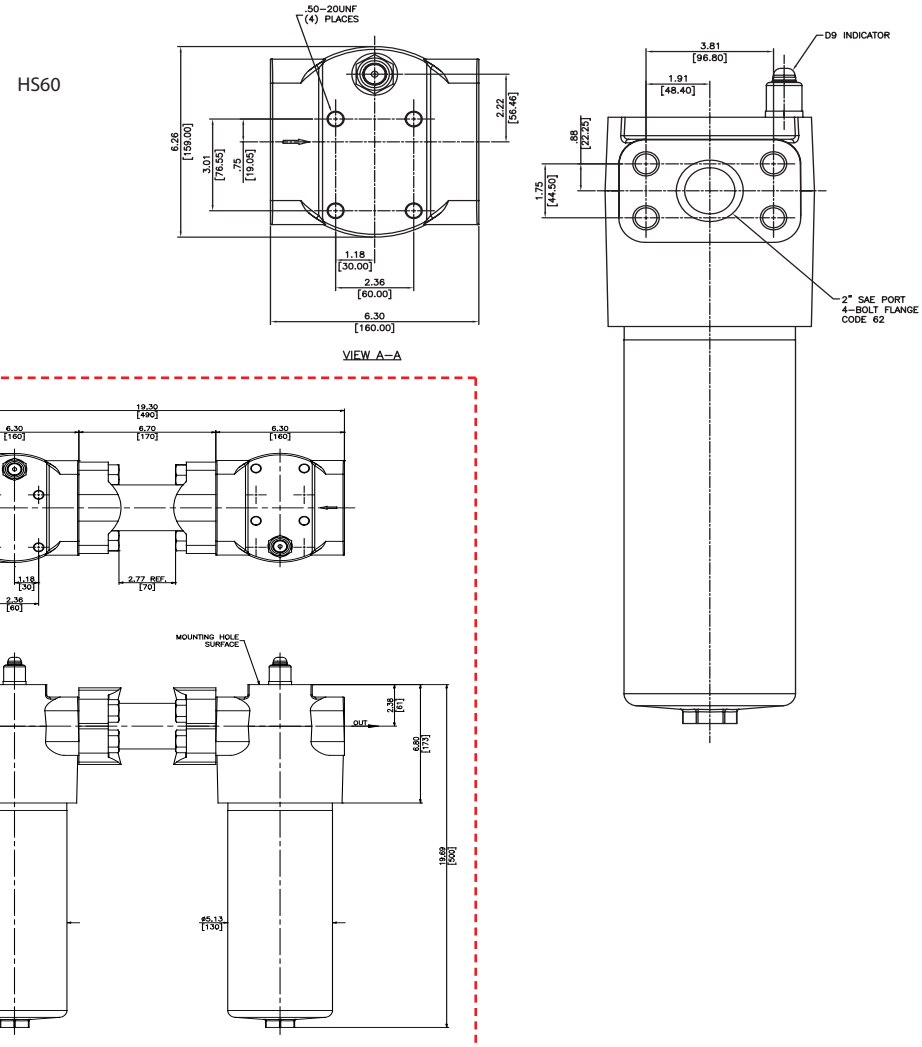

Metric dimensions in ( ).
Dimensions shown are inches (millimeters) for general information and overall envelope size only.
For complete dimensions please contact Schroeder Industries to request a certified print.

Element Performance Information & Dirt Holding Capacity

	Filtration Ratio Per ISO 4572/NFPA T3.10.8.8 Using automated particle counter (APC) calibrated per ISO 4402			Filtration Ratio per ISO 16889 Using APC calibrated per ISO 11171	
Element	$ß_x \geq 75$	$ß_x \geq 100$	$ß_x \geq 200$	$ß_x(c) \geq 200$	$ß_x(c) \geq 1000$
13HZ3/13HZX3	<1.0	<1.0	<2.0	<4.0	4.8
13HZ5/13HZX5	2.5	3.0	4.0	4.8	6.3
13HZ10/13HZX10	7.4	8.2	10.0	8.0	10.0
13HZ25/13HZX25	18.0	20.0	22.5	19.0	24.0

Element	DHC (gm)	Element	DHC (gm)
13HZ3	100.7	13HZX3	75.7
13HZ5	113.2	13HZX5	74.1
13HZ10	119.7	13HZX10	81.4
13HZ25	123.5	13HZX25	92.9

Element Collapse Rating: 290 psi (20 bar) for standard elements
3045 psi (210 bar) for high collapse (ZX) versions

Flow Direction: Outside In

Element Nominal Dimensions: 13HZ : 3.5" (90 mm) O.D. x 13" (325 mm) long

Pressure Drop Information

Based on Flow Rate and Viscosity

$\Delta P_{housing}$

HS60/MHS60 $\Delta P_{housing}$ for fluids with sp gr (specific gravity) = 0.86:

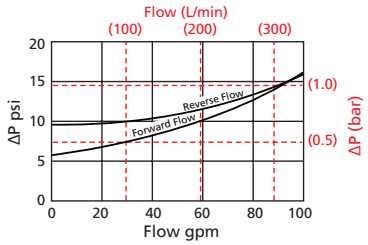

$\Delta P_{element}$

13HZ

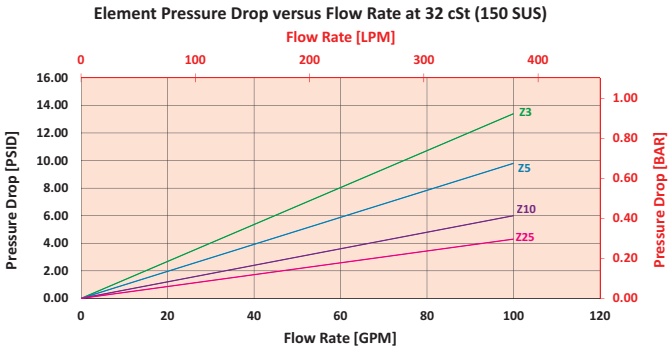

$$\Delta P_{filter} = \Delta P_{housing} + (\Delta P_{element} * V_f)$$

Exercise:

Determine ΔP_{filter} at 30 gpm (113.7 L/min) for HS6013HZ10S24D13 using 160 SUS (34 cSt) fluid.

Use the housing pressure curve to determine $\Delta P_{housing}$ at 30 gpm. In this case, $\Delta P_{housing}$ is 7 psi (.48 bar) on the graph for the HS60 housing.

Use the element pressure curve to determine $\Delta P_{element}$ at 30 gpm. In this case, $\Delta P_{element}$ is 2 psi (.14 bar) according to the graph for the 13HZ10 element.

Because the viscosity in this sample is 160 SUS (34 cSt), we determine the Viscosity Factor (V_f) by dividing the Operating Fluid Viscosity with the Standard Viscosity of 150 SUS (32 cSt). To best determine your Operating Fluid Viscosity, please reference the chart in Appendix D.

Finally, the overall filter pressure differential, ΔP_{filter}, is calculated by adding $\Delta P_{housing}$ with the true element pressure differential, ($\Delta P_{element} * V_f$). The $\Delta P_{element}$ from the graph has to be multiplied by the viscosity factor to get the true pressure differential across the element.

Solution:

$\Delta P_{housing}$ = 7 psi [.48 bar] | $\Delta P_{element}$ = 2 psi [.14 bar]

V_f = 160 SUS (34 cSt) / 150 SUS (32 cSt) = 1.1

ΔP_{filter} = 7 psi + (2 psi * 1.1) = 9.2 psi

OR

ΔP_{filter} = .48 bar + (.14 bar * 1.1) = .63 bar

Note:
If your element is not graphed, use the following equation:
$\Delta P_{element}$ = Flow Rate x $\Delta P_{f.}$ Plug this variable into the overall pressure drop equation.

Ele.	ΔP
13HZX3	0.176
13HZX5	0.104
13HZX10	0.054
13HZX25	0.048

HS60/ MHS60

Hydrostatic Top-Ported Pressure Filter

Filter Model Number Selection

How to Build a Valid Model Number for a Schroeder HS60:

BOX 1		BOX 2		BOX 3		BOX 4		BOX 5
HS60	–		–		–		–	

Example: NOTE: One option per box

BOX 1		BOX 2		BOX 3		BOX 4		BOX 5	
HS60	–	13HZ3	–		–	F24	–	D13	= HS6013HZ3F24D13

BOX 1

Filter Series
HS60
HSN60 (Non-bypassing: requires ZX high collapse elements)
MHS60
MHSN60 (Non-bypassing: requires ZX high collapse elements)

BOX 2

Element Part Number
13HZ3 = 3 µ Excellement® Z-Media® (synthetic)
13HZ5 = 5 µ Excellement® Z-Media® (synthetic)
13HZ10 = 10 µ Excellement® Z-Media® (synthetic)
13HZ25 = 25 µ Excellement® Z-Media® (synthetic)
13HZX3 = 3 µ Excellement® Z-Media® (high collapse center tube)
13HZX5 = 5 µ Excellement® Z-Media® (high collapse center tube)
13HZX10 = 10 µ Excellement® Z-Media® (high collapse center tube)
13HZX25 = 25 µ Excellement® Z-Media® (high collapse center tube)

BOX 3

Seal Material
Omit = Buna N
V = Viton®
H = EPR

BOX 4

Porting Options
S24 = SAE-24
F24 = 1½" SAE 4-bolt flange Code 62
F32 = 2"SAE 4-bolt flange Code 62

BOX 5

Dirt Alarm® Options		
None	Omit =	None
Visual	D13 =	Visual pop-up
Electrical	MS5SS =	Electrical w/ 12 in. 18 gauge 4-conductor cable
	MS5SSLC =	Low current MS5
	MS10SS =	Electrical w/ DIN connector (male end only)
	MS10SSLC =	Low current MS10
	MS11SS =	Electrical w/ 12 ft. 4-conductor wire
	MS12SS=	Electrical w/ 5 pin Brad Harrison connector (male end only)
	MS12SSLC =	Low current MS12
	MS16SS =	Electrical w/ weather-packed sealed connector
	MS16SSLC =	Low current MS16
	MS17SSLC =	Electrical w/ 4 pin Brad Harrison male connector
Electrical with Thermal Lockout	MS5SST =	MS5 (see above) w/ thermal lockout
	MS5SSLCT =	Low current MS5T
	MS10SST =	MS10 (see above) w/ thermal lockout
	MS10SSLCT =	Low current MS10T
	MS12SST =	MS12 (see above) w/ thermal lockout
	MS12SSLCT =	Low current MS12T
	MS16SST =	MS16 (see above) w/ thermal lockout
	MS16SSLCT =	Low current MS16T
	MS17SSLCT =	Low current MS17T
Electrical Visual	MS13SS =	Supplied w/ threaded connector & light
	MS14SS =	Supplied w/ 5 pin Brad Harrison connector & light (male end)
Electrical Visual with Thermal Lockout	MS13SSDCT =	MS13 (see above), direct current, w/ thermal lockout
	MS13SSDCLCT =	Low current MS13DCT
	MS14SSDCT =	MS14 (see above), direct current, w/ thermal lockout
	MS14SSDCLCT =	Low current MS14DCT

NOTES:

Box 2. Replacement element part numbers are identical to contents of Boxes 2 and 3.

Box 3. Viton® is a registered trademark of DuPont Dow Elastomers.

Box 5. All Dirt Alarm® Indicators must be Stainless Steel. Standard indicator setting is 75 psi. For replacement indicators, contact the factory.

Hydrostatic Base-Ported Filter KFH50

Model No. of filter in photograph is KFH501K10SD5.

Features and Benefits

- Base-ported Hydrostatic high pressure filter
- Hydrostatic transmission filter for reversing loop systems
- Filters in the "in to out" direction, bypasses in reverse direction
- Element changeout from top minimizes oil spillage
- Offered in pipe, SAE straight thread, flanged and ISO 228 porting
- Integral inlet and outlet female test points option available
- Offered in conventional subplate porting
- Completion of application questionnaire a requirement L-2549 (contact factory)
- Double and triple stacking of K-size elements can be replaced by single KK or 27K-size elements

70 gpm
265 L/min
5000 psi
345 bar

Filter Housing Specifications

Flow Rating:	Up to 70 gpm (265 L/min) for 150 SUS (32 cSt) fluids
Max. Operating Pressure:	5000 psi (345 bar)
Min. Yield Pressure:	15,000 psi (1035 bar), per NFPA T2.6.1
Rated Fatigue Pressure:	3500 psi (240 bar), per NFPA T2.6.1-2005
Temp. Range:	-20°F to 225°F (-29°C to 107°C)
Bypass Setting:	Cracking: 40 psi (2.8 bar) Full Flow: 61 psi (4.2 bar)
Porting Base & Cap: Element Case:	Ductile Iron Steel
Weight of KFH50-1K: Weight of KFH50-2K: Weight of KFH50-3K:	60.0 lbs. (27.2 kg) 80.3 lbs. (36.4 kg) 100.5 lbs. (45.6 kg)
Element Change Clearance:	8.50" (215 mm) for 1K; 17.50" (445 mm) for KK; 26.5" (673 mm) for 27K

Fluid Compatibility

Type Fluid	Appropriate Schroeder Media
Petroleum Based Fluids	All E media (cellulose), Z-Media® and ASP® Media (synthetic)
High Water Content	All Z-Media® (synthetic)
Invert Emulsions	10 and 25 µ Z-Media® (synthetic)
Water Glycols	3, 5, 10 and 25 µ Z-Media® (synthetic)
Phosphate Esters	All Z-Media® (synthetic) with H (EPR) seal designation and 3 and 10 µ E media (cellulose) with H (EPR) seal designation
Skydrol®	3, 5, 10 and 25 µ Z-Media® (synthetic) with H.5 seal designation (EPR seals and stainless steel wire mesh in element, and light oil coating on housing exterior)

KFH50 Hydrostatic Base-Ported Filter

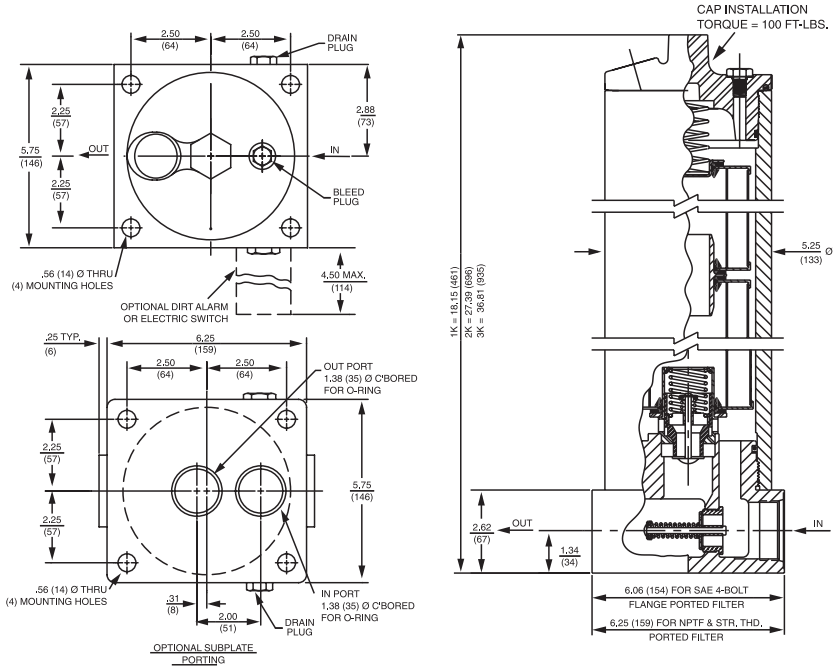

Metric dimensions in ( ).
Dimensions shown are inches (millimeters) for general information and overall envelope size only.
For complete dimensions please contact Schroeder Industries to request a certified print.

Element Performance Information & Dirt Holding Capacity

	Filtration Ratio Per ISO 4572/NFPA T3.10.8.8 Using automated particle counter (APC) calibrated per ISO 4402			Filtration Ratio per ISO 16889 Using APC calibrated per ISO 11171	
Element	$ß_x \geq 75$	$ß_x \geq 100$	$ß_x \geq 200$	$ß_x(c) \geq 200$	$ß_x(c) \geq 1000$
KZ1/KKZ1/27KZ1	<1.0	<1.0	<1.0	<4.0	4.2
KZ3/KKZ3/27KZ3	<1.0	<1.0	<2.0	<4.0	4.8
KZ5/KKZ5/27KZ5	2.5	3.0	4.0	4.8	6.3
KZ10/KKZ10/27KZ10	7.4	8.2	10.0	8.0	10.0
KZ25/KKZ25/27KZ25	18.0	20.0	22.5	19.0	24.0
KZW1	N/A	N/A	N/A	<4.0	<4.0
KZW3/KKZW3	N/A	N/A	N/A	4.0	4.8
KZW5/KKZW5	N/A	N/A	N/A	5.1	6.4
KZW10/KKZW10	N/A	N/A	N/A	6.9	8.6
KZW25/KKZW25	N/A	N/A	N/A	15.4	18.5
KZX3/KKZX3/27KZX3	<1.0	<1.0	<2.0	4.7	5.8
KZX10/KKZX10/27KZX10	7.4	8.2	10.0	8.0	9.8

Element	DHC (gm)	Element	DHC (gm)	Element	DHC (gm)	Element	DHC (gm)	Element	DHC (gm)
KZ1	112	KKZ1	224	27KZ1	336	KZW1	61		
KZ3	115	KKZ3	230	27KZ3	345	KZW3	64	KKZW3	128
KZ5	119	KKZ5	238	27KZ5	357	KZW5	63	KKZW5	126
KZ10	108	KKZ10	216	27KZ10	324	KZW10	57	KKZW10	114
KZ25	93	KKZ25	186	27KZ25	279	KZW25	79	KKZW25	158
KZX3	81*	KKZX3	163*	27KZX3	249*				
KZX10	90*	KKZX10	182*	27KZX10	279*				

* Based on 100 psi terminal pressure

Element Collapse Rating: 150 psid (10 bar) for standard elements
3000 psid (210 bar) for high collapse (ZX) versions

Flow Direction: Outside In

Element Nominal Dimensions:
K: 3.9" (99 mm) O.D. x 9.0" (230 mm) long
KK: 3.9" (99 mm) O.D. x 18.0" (460 mm) long
27K: 3.9" (99 mm) O.D. x 27.0" (690 mm) long

Pressure Drop Information

Based on Flow Rate and Viscosity

$\Delta P_{housing}$

KFH50 $\Delta P_{housing}$ for fluids with sp gr (specific gravity) = 0.86:

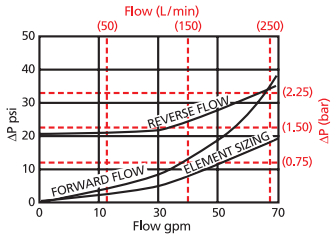

$\Delta P_{element}$

KZ

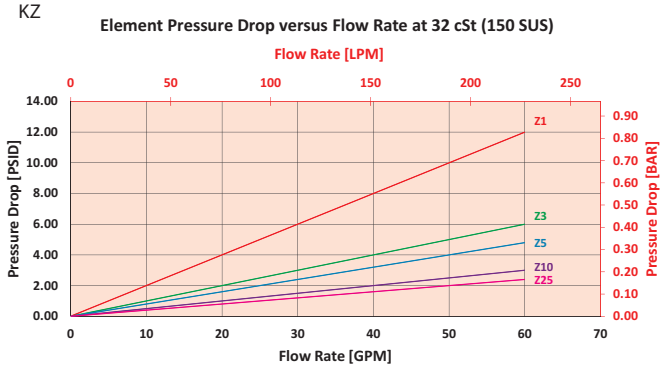

2KZ/KKZ

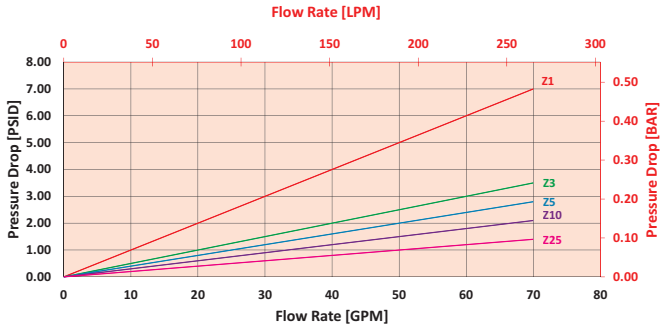

$$\Delta P_{filter} = \Delta P_{housing} + (\Delta P_{element} * V_f)$$

Exercise:

Determine ΔP_{filter} at 30 gpm (113.7 L/min) for KFH501KZ10SD5 using 160 SUS (34 cSt) fluid.

Use the housing pressure curve to determine $\Delta P_{housing}$ at 30 gpm. In this case, $\Delta P_{housing}$ is 9 psi (.62 bar) on the graph for the KFH50 housing.

Use the element pressure curve to determine $\Delta P_{element}$ at 30 gpm. In this case, $\Delta P_{element}$ is 1.5 psi (.10 bar) according to the graph for the KZ10 element.

Because the viscosity in this sample is 160 SUS (34 cSt), we determine the Viscosity Factor (V_f) by dividing the Operating Fluid Viscosity with the Standard Viscosity of 150 SUS (32 cSt). To best determine your Operating Fluid Viscosity, please reference the chart in Appendix D.

Finally, the overall filter pressure differential, ΔP_{filter}, is calculated by adding $\Delta P_{housing}$ with the true element pressure differential, ($\Delta P_{element} * V_f$). The $\Delta P_{element}$ from the graph has to be multiplied by the viscosity factor to get the true pressure differential across the element.

Solution:

$\Delta P_{housing}$ = 9 psi [.62 bar] | $\Delta P_{element}$ = 1.5 psi [.10 bar]

V_f = 160 SUS (34 cSt) / 150 SUS (32 cSt) = 1.1

ΔP_{filter} = 9 psi + (1.5 psi * 1.1) = 10.7 psi

OR

ΔP_{filter} = .62 bar + (.10 bar * 1.1) = .73 bar

Note:
If your element is not graphed, use the following equation:
$\Delta P_{element}$ = Flow Rate x $\Delta P_{f.}$ Plug this variable into the overall pressure drop equation.

Ele.	ΔP	Ele.	ΔP	Ele.	ΔP
K3	0.25	2K3/ KK3	0.12	3KZ1/ 27KZ1	0.05
K10	0.09	2K10/ KK10	0.05	3KZ3/ 27KZ3	0.03
K25	0.02	2K25/ KK25	0.01	3KZ5/ 27KZ5	0.02
KAS3	0.10	2KAS3/ KKAS3	0.05	3KZ10/ 27KZ10	0.02
KAS5	0.08	2KAS5/ KKAS5	0.04	3KZ25/ 27KZ25	0.01
KAS10	0.05	2KAS10/ KKAS10	0.03	3K3	0.08
KZX10	0.22	2KZX10/ KKZX10	0.11	3K10	0.03
KZW1	0.43	2KZW1	-	3K25	0.01
KZW3	0.32	2KZW3/ KKZW3	0.16	3KAS3/ 27KAS3	0.03
KZW5	0.28	2KZW5/ KKZW5	0.14	3KAS5/ 27KAS5	0.02
KZW10	0.23	2KZW10/ KKZW10	0.12	3KAS10/ 27KAS10	0.02
KZW25	0.14	2KZW25/ KKZW25	0.07	3KAS25/ 27KAS25	0.07

KFH50 Hydrostatic Base-Ported Filter

Filter Model Number Selection

How to Build a Valid Model Number for a Schroeder KFH50:

BOX 1	BOX 2	BOX 3	BOX 4	BOX 5	BOX 6	BOX 7	BOX 8	BOX 9
KFH50 –	–	–	–	–	–	–	–	–

Example: NOTE: Only box 6 may contain more than one option

BOX 1	BOX 2	BOX 3	BOX 4	BOX 5	BOX 6	BOX 7	BOX 8	BOX 9	
KFH50 –	1 –	KZ5 –	–	S –	–	–	D5 –	G509	= KFH501KZ5SD5G509

BOX 1

Filter Series
KFH50

BOX 2

Number of Elements
1
2
3

BOX 3

Element Part Number			
K Length	KK Length	27K Length	
K3	KK3	27K3	= 3 µ E media (cellulose)
K10	KK10	27K10	= 10 µ E media (cellulose)
K25			= 25 µ E media (cellulose)
KZ1	KKZ1	27KZ1	= 1 µ Excellement® Z-Media® (synthetic)
KZ3	KKZ3	27KZ3	= 3 µ Excellement® Z-Media® (synthetic)
KZ5	KKZ5	27KZ5	= 5 µ Excellement® Z-Media® (synthetic)
KZ10	KKZ10	27KZ10	= 10 µ Excellement® Z-Media® (synthetic)
KZ25	KKZ25	27KZ25	= 25 µ Excellement® Z-Media® (synthetic)
KZW1			= 1 µ Aqua-Excellement™ ZW media
KZW3	KKZW3		= 3 µ Aqua-Excellement™ ZW media
KZW5	KKZW5		= 5 µ Aqua-Excellement™ ZW media
KZW10	KKZW10		= 10 µ Aqua-Excellement™ ZW media
KZW25	KKZW25		= 25 µ Aqua-Excellement™ ZW media
KW	KKW	27KW	= W media (water removal)
KM10			= K size 10 µ M media (reusable metal)
KM25			= K size 25 µ M media (reusable metal)
KM60			= K size 60 µ M media (reusable metal)
KM150			= K size 150 µ M media (reusable metal)
KM260			= K size 260 µ M media (reusable metal)

BOX 4

Seal Material
Omit = Buna N
V = Viton®
H = EPR
H.5 = Skydrol® compatibility

BOX 5

Porting
P = 1½" NPTF
S = SAE-24
F = 1½" SAE 4-bolt flange Code 62
O = Subplate
B = ISO 228 G-1½"

BOX 6

Bypass
Omit = 40 PSI Bypass
50 = 50 PSI Bypass

BOX 7

Test Points
Omit = None
L = Two ¼" NPTF inlet and outlet female test ports
U = Series 1215 7/16 UNF Schroeder Check Test Point installation in cap (upstream)
UU = Series 1215 7/16 UNF Schroeder Check Test Point installation in block (upstream and downstream)

BOX 8

Dirt Alarm® Options		
None	Omit =	None
Visual	D =	Pointer
	D5 =	Visual pop-up
	D5C =	D5 in cap
	D9 =	All stainless D5
Visual with Thermal Lockout	D8 =	Visual w/ thermal lockout
	D8C =	D8 in cap
Electrical	MS5 =	Electrical w/ 12 in. 18 gauge 4-conductor cable
	MS5LC =	Low current MS5
	MS10 =	Electrical w/ DIN connector (male end only)
	MS10LC =	Low current MS10
	MS11 =	Electrical w/ 12 ft. 4-conductor wire
	MS12 =	Electrical w/ 5 pin Brad Harrison connector (male end only)
	MS12LC =	Low current MS12
	MS16 =	Electrical w/ weather-packed sealed connector
	MS16LC =	Low current MS16
	MS17LC =	Electrical w/ 4 pin Brad Harrison male connector
Electrical with Thermal Lockout	MS5T =	MS5 (see above) w/ thermal lockout
	MS5LCT =	Low current MS5T
	MS10T =	MS10 (see above) w/ thermal lockout
	MS10LCT =	Low current MS10T
	MS12T =	MS12 (see above) w/ thermal lockout
	MS12LCT =	Low current MS12T
	MS16T =	MS16 (see above) w/ thermal lockout
	MS16LCT =	Low current MS16T
	MS17LCT =	Low current MS17T
Electrical Visual	MS =	Cam operated switch w/ ½" conduit female connection
	MS13DC =	Supplied w/ threaded connector & light
	MS14DC =	Supplied w/ 5 pin Brad Harrison connector & light (male end)
Electrical Visual with Thermal Lockout	MS13DCT =	MS13 (see above), direct current, w/ thermal lockout
	MS13DCLCT =	Low current MS13DCT
	MS14DCT =	MS14 (see above), direct current, w/ thermal lockout
	MS14DCLCT =	Low current MS14DCT

BOX 9

Additional Options
Omit = None
G509 = Dirt alarm and drain opposite standard

NOTES:

Box 2. Number of elements must equal 1 when using KK or 27K elements.

Box 3. Replacement element part numbers are identical to contents of Boxes 3 and 4. Double and triple stacking of K-size elements can be replaced by single KK and 27K elements, respectively. ZW media not available in 27K length.

Box 4. H.5 seal designation includes the following: EPR seals, stainless steel wire mesh on elements, and light oil coating on housing exterior. Viton® is a registered trademark of DuPont Dow Elastomers. Skydrol® is a registered trademark of Solutia Inc.

Box 5. For option F, bolt depth .75" (19 mm). For option O, O-rings included; hardware not included.

In-Line Filter LC60

8 gpm
30 L/min
6000 psi
415 bar

Features and Benefits (LC60)

- Compact design allows for in-line installation.
- Small profile allows filter to be mounted in tight areas.
- Quick and easy cartridge element change outs.
- Durable, compact design.
- Uses 10 micron stainless steel wire mesh filtration.
- Perfect for pilot pressure circuits and pressure compensated pump protection.

Model No. of filter in photograph is LC601SSD10S.

Filter Housing Specifications

Flow Rating:	Up to 8 gpm (30 L/min) for 150 SUS (32 cSt) fluids
Max. Operating Pressure:	6000 psi (414 bar)
Min. Yield Pressure:	18000 psi (1241 bar), per NFPA T2.6.1
Rated Fatigue Pressure:	6000 psi (414 bar), per NFPA T2.6.1
Temp. Range:	-20°F to 225°F (-29°C to 107°C)
Porting Head: Element Case:	Steel Steel
Weight:	0.93 lbs. (0.42 kg)
Element Change Clearance:	2.50" (63.5 mm)

Fluid Compatibility

Type Fluid	Appropriate Schroeder Media
Petroleum Based Fluids	All Stainless Steel Wire Mesh
Invert Emulsions	10 µ Stainless Steel Wire Mesh
Water Glycols	10 µ Stainless Steel Wire Mesh

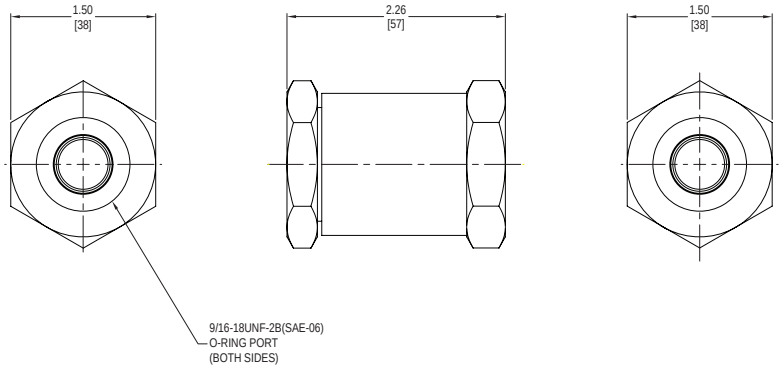

Metric dimensions in ( ).
Dimensions shown are inches (millimeters) for general information and overall envelope size only.
For complete dimensions please contact Schroeder Industries to request a certified print.

LC60 In-Line Filter

Element Performance Information & Dirt Holding Capacity

Element	Filtration Ratio Per ISO 4572/NFPA T3.10.8.8 Using automated particle counter (APC) calibrated per ISO 4402			Filtration Ratio per ISO 16889 Using APC calibrated per ISO 11171	
	$ß_x \geq 75$	$ß_x \geq 100$	$ß_x \geq 200$	$ß_x(c) \geq 200$	$ß_x(c) \geq 1000$

Please contact manufacture for more details

Pressure Drop Information

Based on Flow Rate and Viscosity

$\Delta P_{housing}$

LC60 $\Delta P_{housing}$ for fluids with sp gr (specific gravity) = 0.86:

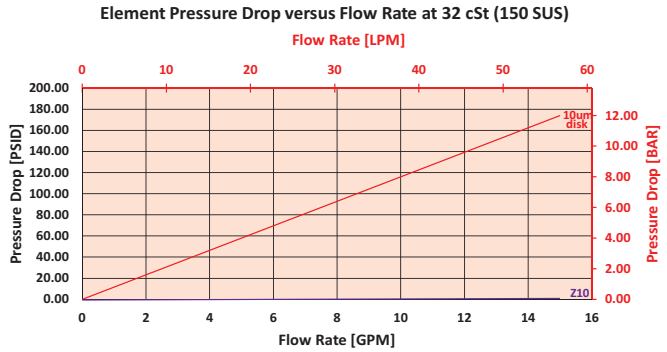

Filter Model Number Selection

How to Build a Valid Model Number for a Schroeder LC60:

BOX 1		BOX 2		BOX 3		BOX 4		BOX 5
LC60	–		–		–		–	

Example:

BOX 1		BOX 2		BOX 3		BOX 4		BOX 5	
LC60	–	1	–	SSD10	–		–	S	= LC601SSD10S

BOX 1

Filter Series
LC60

BOX 2

Number of Elements
1

BOX 3

Element Part Number
SSD10 = 10 µ Stainless Steel Wire Mesh

BOX 4

Seal Material
Omit = Buna N

BOX 5

Porting
S = SAE-6

Features and Benefits (LC35)

- Compact design allows for in-line installation.
- Small profile allows filter to be mounted in tight areas.
- Quick and easy cartridge element change outs.
- Durable, compact design.
- Uses 10 or 40 micron Sintered Bronze filtration.
- Perfect for pilot pressure circuits and pressure compensated pump protection.

15 gpm
57 L/min
3500 psi
241 bar

Model No. of filter in photograph is LC351BS10S.

Filter Housing Specifications

Flow Rating:	Up to 15 gpm (57 L/min) for 150 SUS (32 cSt) fluids
Max. Operating Pressure:	3500 psi (241 bar)
Min. Yield Pressure:	10500 psi (724 bar), per NFPA T2.6.1
Rated Fatigue Pressure:	2200 psi (152 bar), per NFPA T2.6.1
Temp. Range:	-20°F to 225°F (-29°C to 107°C)
Porting Head:	Steel
Element Case:	Steel
Weight:	1.32 lbs. (0.60 kg)
Element Change Clearance:	3.25" (82.6 mm)

Fluid Compatibility

Type Fluid	Appropriate Schroeder Media
Petroleum Based Fluids	All Sintered Bronze
Invert Emulsions	10 and 40 µ Sintered Bronze
Water Glycols	10 and 40 µ Sintered Bronze

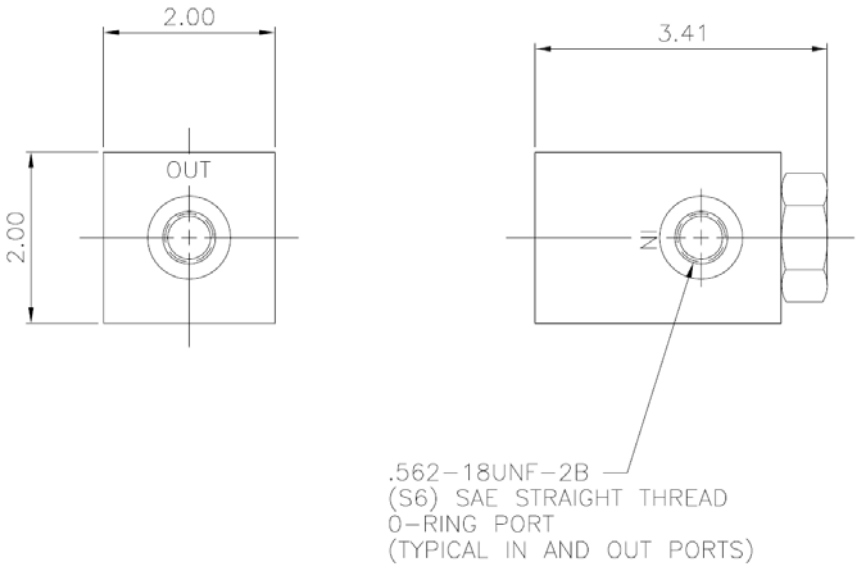

Metric dimensions in ( ).
Dimensions shown are inches (millimeters) for general information and overall envelope size only.
For complete dimensions please contact Schroeder Industries to request a certified print.

LC35 In-Line Filter

Element Performance Information & Dirt Holding Capacity

Element	Filtration Ratio Per ISO 4572/NFPA T3.10.8.8 Using automated particle counter (APC) calibrated per ISO 4402			Filtration Ratio per ISO 16889 Using APC calibrated per ISO 11171	
	$ß_x \geq 75$	$ß_x \geq 100$	$ß_x \geq 200$	$ß_x(c) \geq 200$	$ß_x(c) \geq 1000$

Please contact manufacturer for more details

Pressure Drop Information

Based on Flow Rate and Viscosity

$\Delta P_{housing}$

LC35 $\Delta P_{housing}$ for fluids with sp gr (specific gravity) = 0.86:

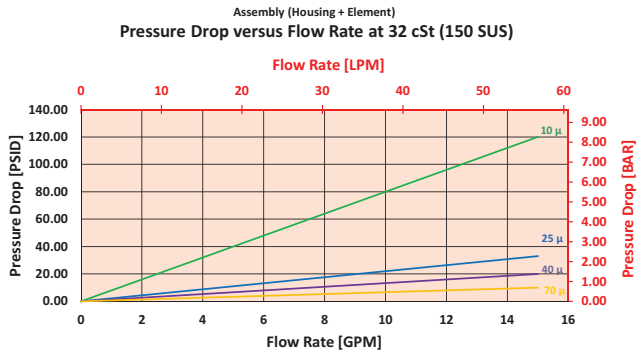

Filter Model Number Selection

How to Build a Valid Model Number for a Schroeder LC35:

BOX 1		BOX 2		BOX 3		BOX 4		BOX 5
LC35	–		–		–		–	

Example:

BOX 1		BOX 2		BOX 3		BOX 4		BOX 5	
LC35	–	1	–	BS10	–		–	S	= LC351BS10S

BOX 1

Filter Series
LC35

BOX 2

Number of Elements
1

BOX 3

Element Part Number
BS10 = 10 µ Sintered Bronze
BS25 = 25 µ Sintered Bronze
BS40 = 40 µ Sintered Bronze
BS70 = 70 µ Sintered Bronze

BOX 4

Seal Material
Omit = Buna N

BOX 5

Porting
S = SAE-6

In-Line Filter LI50

Model No. of filter in photograph is LI50IZ10SMS13DC.

Features and Benefits

- In-line pressure filter
- Designed for high pressure last chance protection
- Available with indicator, which is unique for in-line filters of this kind.
- Cap handles provide for easy element changeout

35 gpm
130 L/min
5000 psi
345 bar

Filter Housing Specifications

Flow Rating:	35 gpm (130 L/min)
Max. Operating Pressure:	5000 psi (345 bar)
Min. Yield Pressure:	300 psi (21 bar), per NFPA T2.6.1
Rated Fatigue Pressure:	Contact Factory
Temp. Range:	-20°F to 225°F (-29°C to 107°C)
Bypass Setting:	Cracking: 50 psi (3.4 bar) Full Flow: 55 psi (3.8 bar)
Housing: Cap:	Ductile Iron Steel
Weight:	10.0 lbs. (4.5 kg)
Element Change Clearance:	7.1 (178 mm)

Fluid Compatibility

Type Fluid	Appropriate Schroeder Media
Petroleum Based Fluids	Z-Media® and ASP® media (synthetic)
High Water Content	All Z-Media® and ASP® media (synthetic)
Invert Emulsions	10 and 25 µ Z-Media® and 10 µ ASP® media (synthetic)
Water Glycols	3, 5, 10 and 25 µ Z-Media® and all ASP® media (synthetic)
Phosphate Esters	All Z-Media® (synthetic) with H (EPR) seal designation and all ASP® media (synthetic)

LI50 In-Line Filter

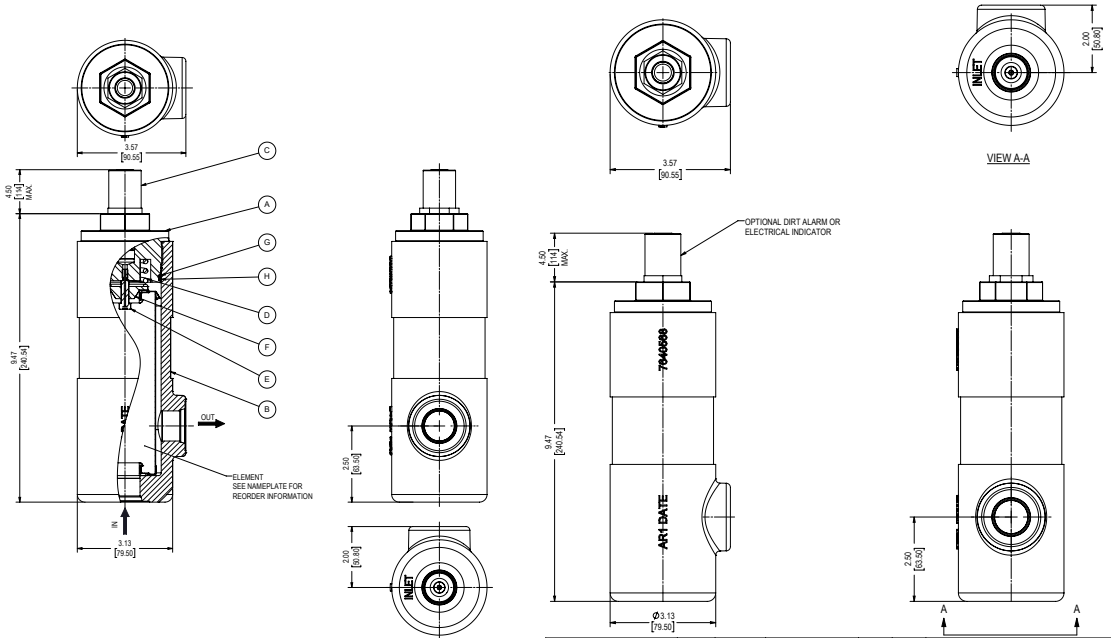

Metric dimensions in ( ).

Element Performance Information & Dirt Holding Capacity

Element	Filtration Ratio Per ISO 4572/NFPA T3.10.8.8 Using automated particle counter (APC) calibrated per ISO 4402			Filtration Ratio per ISO 16889 Using APC calibrated per ISO 11171	
	$ß_x \geq 75$	$ß_x \geq 100$	$ß_x \geq 200$	$ß_{x(c)} \geq 200$	$ß_{x(c)} \geq 1000$
IZ1	<1.0	<1.0	<1.0	<4.0	4.2
IZ3	<1.0	<1.0	<2.0	<4.0	4.8
IZ5	2.5	3.0	4.0	4.8	6.3
IZ10	7.4	8.2	10.0	8.0	10.0
IZ25	18.0	20.0	22.5	19.0	24.0

Element	DHC (gm)
IZ1	8.3
IZ3	7.1
IZ5	7.9
IZ10	7.0
IZ25	

Element Collapse Rating: 290 psid

Flow Direction: Inside Out

Element Nominal Dimensions: 2.04" OD x
(52mm OD x 155 mm long)
6.12" long

Pressure Drop Information
Based on Flow Rate and Viscosity

$\Delta P_{housing}$

IZ $\Delta P_{housing}$ for fluids with sp gr (specific gravity) = 0.86:

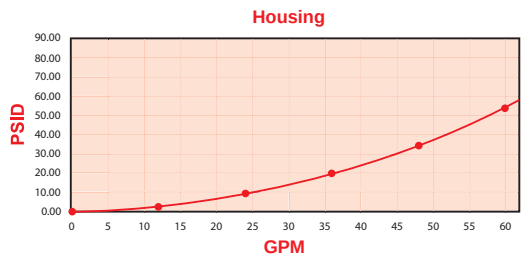

$\Delta P_{element}$

IZ

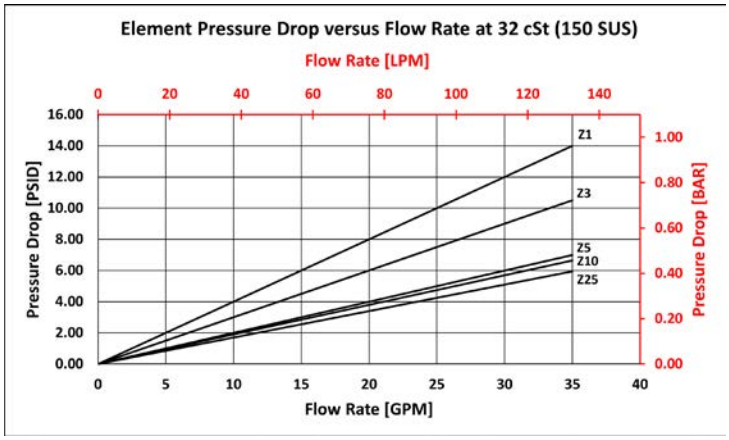

$$\Delta P_{filter} = \Delta P_{housing} + (\Delta P_{element} * V_f)$$

Exercise:

Determine ΔP_{filter} at 200 gpm (758 L/min) for LI50IZ10SMS13DC using 160 SUS (34 cSt) fluid.

Use the housing pressure curve to determine $\Delta P_{housing}$ at 35 gpm. In this case, $\Delta P_{housing}$ is 19 psi (1.31 bar) on the graph for the LI50 housing.

Use the element pressure curve to determine $\Delta P_{element}$ at 35 gpm. In this case, $\Delta P_{element}$ is 7 psi (.48 bar) according to the graph for the IZ10 element.

Because the viscosity in this sample is 160 SUS (34 cSt), we determine the Viscosity Factor (V_f) by dividing the Operating Fluid Viscosity with the Standard Viscosity of 150 SUS (32 cSt). To best determine your Operating Fluid Viscosity, please reference the chart in Appendix D.

Finally, the overall filter pressure differential, ΔP_{filter}, is calculated by adding $\Delta P_{housing}$ with the true element pressure differential, ($\Delta P_{element} * V_f$). The $\Delta P_{element}$ from the graph has to be multiplied by the viscosity factor to get the true pressure differential across the element.

Solution:

$\Delta P_{housing}$ = 19 psi [1.31 bar] | $\Delta P_{element}$ = 7 psi [.48 bar]

V_f = 160 SUS (34 cSt) / 150 SUS (32 cSt) = 1.1

ΔP_{filter} = 2 psi + (7 psi * 1.1) = 9.7 psi

OR

ΔP_{filter} = 1.31 bar + (.48 bar * 1.1) = 1.84 bar

In-Line Filter

Filter Model Number Selection

How to Build a Valid Model Number for a Schroeder QT:

BOX 1		BOX 2		BOX 3		BOX 4		BOX 5
LI50	–		–		–		–	

Example: NOTE: One option per box

BOX 1		BOX 2		BOX 3		BOX 4		BOX 5	
LI50	–	IZ10	–		–	S	–	MS13DC	= LI50IZ10SMS13DC

BOX 1	BOX 2	BOX 3	BOX 4	BOX 5
Filter Series	**Element Part Number**	**Seal Material**	**Porting**	**Indicator**
LI50	IZ1 IZ3 IZ5 IZ10 IZ25	Omit = Buna	S = SAE12	MS13DC = MS13DC indicator

In-Line Filter LC50

9 gpm
35 L/min
5000 psi
345 bar

Features and Benefits

- Compact design allows for in-line installation on hose reels
- High quality synthetic ZX-Media high collapse elements ensure all fluid is filtered
- Available with SAE or NPT threading
- Convenient 2 ¼" Hex for easy service

Model No. of filter in photograph is LC501LZX10S.

Filter Housing Specifications

Flow Rating:	Up to 9 gpm (35 L/min) for 150 SUS (32 cSt) fluids
Max. Operating Pressure:	5000 psi (350 bar)
Min. Yield Pressure:	15,000 psi (1050 bar)
Rated Fatigue Pressure:	5000 psi (350 bar), per NFPA T2.6.1-R1-2005
Temp. Range:	-20°F to 225°F (-29°C to 107°C)
Body and Cap:	Steel
Element Case:	Steel
Weight of LC50:	3.63 lbs. (1.65 kg)
Element Change Clearance:	3.25" (83 mm)

Fluid Compatibility

Type Fluid	Appropriate Schroeder Media
Petroleum Based Fluids	All Z-Media® (synthetic)
High Water Content	All Z-Media® (synthetic)
Invert Emulsions	10 and 25 µ Z-Media® (synthetic)
Water Glycols	10 and 25 µ Z-Media® (synthetic)

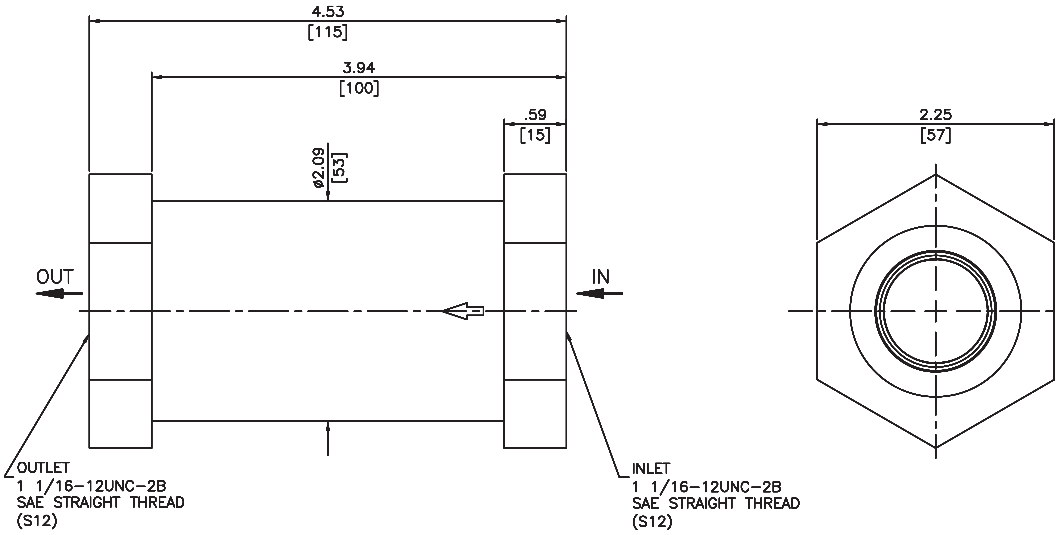

Metric dimensions in ( ).
Dimensions shown are inches (millimeters) for general information and overall envelope size only.
For complete dimensions please contact Schroeder Industries to request a certified print.

LC50 In-Line Filter

Element Performance Information & Dirt Holding Capacity

Element	Filtration Ratio per ISO 16889 Using APC calibrated per ISO 11171 $ß_x(c) \geq 200$	$ß_x(c) \geq 1000$
LZX3	<4.0	4.8
LZX10	8.0	10.0
LZX25	19.0	24.0

Element	DHC (gm)	Element	DHC (gm)
LZX3	1.1	LZX25	1.0
LZX10	1.0	LZX40	0.9

Element Collapse Rating: 3000 psi (207 bar)

Flow Direction: Outside In

Element Nominal Dimensions: 1.4" (43 mm) O.D. x 1.7" (35 mm) long

Pressure Drop Information

Based on Flow Rate and Viscosity

$\Delta P_{housing}$

LC50 $\Delta P_{housing}$ for fluids with sp gr (specific gravity) = 0.86:

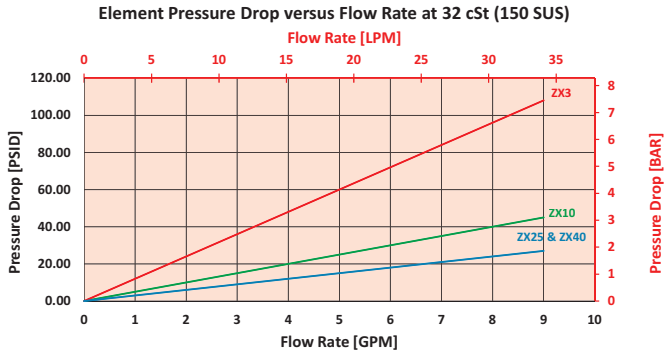

Filter Model Number Selection

How to Build a Valid Model Number for a Schroeder LC50:

BOX 1		BOX 2		BOX 3		BOX 4		BOX 5
LC50	–		–		–		–	

BOX 1		BOX 2		BOX 3		BOX 4		BOX 5	
LC50	–	1	–	LZX10	–		–	S	= LC501LZX10S

BOX 1 — Filter Series

LC50 (non-bypassing only)

BOX 2 — Number of Elements

1

BOX 3 — Element Part Number

LZX3 = 3 µ Excellement® Z-Media® (high collapse center tube)

LZX10 = 10 µ Excellement® Z-Media® (high collapse center tube)

LZX25 = 25 µ Excellement® Z-Media® (high collapse center tube)

LZX40 = 40 µ Excellement® Z-Media® (high collapse center tube)

BOX 4 — Seal Material

Omit = Buna N

V = Viton®

BOX 5 — Porting

S = SAE-12

P = ¾"NPT

High-Pressure Sandwich Filter NOF30-05

Model No. of filter in photograph is NOF301NNZX305D5.

Features and Benefits

- Sandwich filter configured for D05 subplate
- Withstands high pressure surges, high static pressure loads
- 3000 psi collapse elements

12 gpm
45 L/min
3000 psi
210 bar

Filter Housing Specifications

Flow Rating:	Up to 12 gpm (45 L/min) for 150 SUS (32 cSt) fluids
Max. Operating Pressure:	3000 psi (210 bar)
Min. Yield Pressure:	10,000 psi (690 bar), per NFPA T2.6.1
Rated Fatigue Pressure:	Contact Factory
Temp. Range:	-20°F to 225°F (-29°C to 107°C)
Bypass Setting:	High collapse elements are standard
Porting Base & Cap:	Aluminum
Element Case:	Aluminum
Weight of NOF30-1NN:	6.6 lbs. (3.0 kg)
Element Change Clearance:	4.50" (115 mm)

Fluid Compatibility

Type Fluid	Appropriate Schroeder Media
Petroleum Based Fluids	All Z-Media® (synthetic)
High Water Content	3, 10 and 25 µ Z-Media® (synthetic)
Invert Emulsions	10 and 25 µ Z-Media® (synthetic)
Water Glycols	3, 10 and 25 µ Z-Media® (synthetic)

NOF30-05 High-Pressure Sandwich Filter

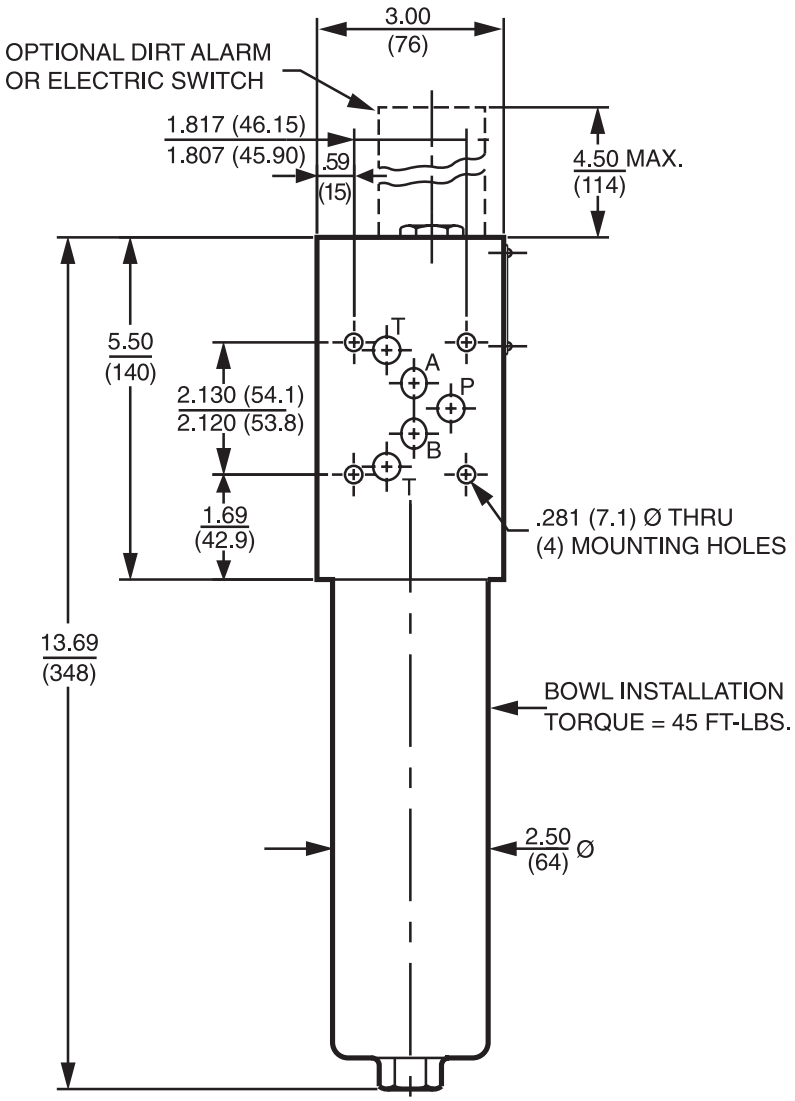

D05 PATTERN

Metric dimensions in ( ).
Dimensions shown are inches (millimeters) for general information and overall envelope size only.
For complete dimensions please contact Schroeder Industries to request a certified print.

Element Performance Information & Dirt Holding Capacity

	Filtration Ratio Per ISO 4572/NFPA T3.10.8.8 Using automated particle counter (APC) calibrated per ISO 4402			Filtration Ratio per ISO 16889 Using APC calibrated per ISO 11171	
Element	$ß_x \geq 75$	$ß_x \geq 100$	$ß_x \geq 200$	$ß_{x(c)} \geq 200$	$ß_{x(c)} \geq 1000$
NNZX3	<1.0	<1.0	<2.0	4.7	5.8
NNZX10	7.4	8.2	10.0	8.0	9.8

Element	DHC (gm)
NNZX3	11*
NNZX10	13*

*Based on 100 psi terminal pressure

Element Collapse Rating: 3000 psid (210 bar) for high collapse (ZX) versions

Flow Direction: Outside In

Element Nominal Dimensions: 1.75" (45 mm) O.D. x 8.00" (200 mm) long

Pressure Drop Information

Based on Flow Rate and Viscosity

$\Delta P_{housing}$

NOF30-05 $\Delta P_{housing}$ for fluids with sp gr (specific gravity) = 0.86:

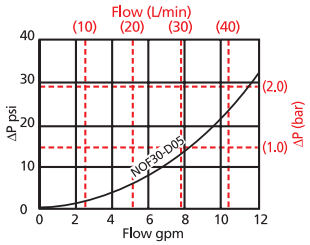

$\Delta P_{element}$

1NNZX

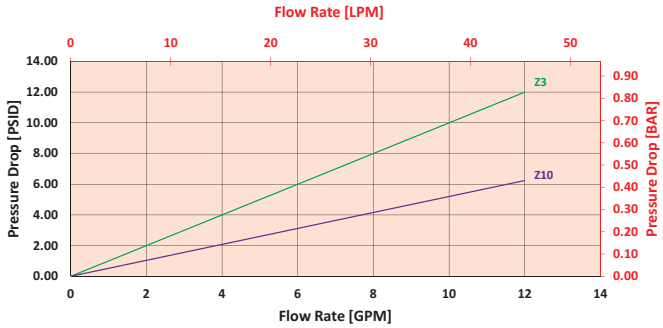

$$\Delta P_{filter} = \Delta P_{housing} + (\Delta P_{element} * V_f)$$

Exercise:

Determine ΔP_{filter} at 5 gpm (19 L/min) for NOF301NNZX1005D5 using 160 SUS (34 cSt) fluid.

Use the housing pressure curve to determine $\Delta P_{housing}$ at 5 gpm. In this case, $\Delta P_{housing}$ is 5 psi (.34 bar) on the graph for the NOF30 housing.

Use the element pressure curve to determine $\Delta P_{element}$ at 5 gpm. In this case, $\Delta P_{element}$ is 3 psi (.21 bar) according to the graph for the NNZX10 element.

Because the viscosity in this sample is 160 SUS (34 cSt), we determine the Viscosity Factor (V_f) by dividing the Operating Fluid Viscosity with the Standard Viscosity of 150 SUS (32 cSt). To best determine your Operating Fluid Viscosity, please reference the chart in Appendix D.

Finally, the overall filter pressure differential, ΔP_{filter}, is calculated by adding $\Delta P_{housing}$ with the true element pressure differential, ($\Delta P_{element}$*V_f). The $\Delta P_{element}$ from the graph has to be multiplied by the viscosity factor to get the true pressure differential across the element.

Solution:

$\Delta P_{housing}$ = 5 psi [.34 bar] | $\Delta P_{element}$ = 3 psi [.21 bar]

V_f = 160 SUS (34 cSt) / 150 SUS (32 cSt) = 1.1

ΔP_{filter} = 5 psi + (3 psi * 1.1) = 8.3 psi

OR

ΔP_{filter} = .34 bar + (.21 bar * 1.1) = .57 bar

NOF30-05 High-Pressure Sandwich Filter

Filter Model Number Selection

How to Build a Valid Model Number for a Schroeder NOF30-05:

BOX 1		BOX 2		BOX 3		BOX 4		BOX 5		BOX 6		BOX 7
NOF30	–		–		–		–		–		–	

BOX 1		BOX 2		BOX 3		BOX 4		BOX 5		BOX 6		BOX 7	
NOF30	–	1	–	NNZX3	–		–	05	–		–	D5	= NOF301NNZX305D5

BOX 1

Filter Series
NOF30

BOX 2

Number & Size of Elements
1

BOX 3

Element Part Number	
NNZX3	= NN size 3 µ high collapse media
NNZX10	= NN size 10 µ high collapse media
NNZX25	= NN size 25 µ high collapse media

BOX 4

Seal Material	
Omit	= Buna N
V	= Viton®
W	= Buna N

BOX 5

Porting	
05	= D05 subplate pattern

BOX 6

Options
Omit = None

BOX 7

Dirt Alarm® Options		
None	Omit =	None
Visual	D5 =	Visual pop-up
Visual with Thermal Lockout	D8 =	Visual w/ thermal lockout
Electrical	MS5 =	Electrical w/ 12 in. 18 gauge 4-conductor cable
	MS5LC =	Low current MS5
	MS10 =	Electrical w/ DIN connector (male end only)
	MS10LC =	Low current MS10
	MS11 =	Electrical w/ 12 ft. 4-conductor wire
	MS12 =	Electrical w/ 5 pin Brad Harrison connector (male end only)
	MS12LC =	Low current MS12
	MS16 =	Electrical w/ weather-packed sealed connector
	MS16LC =	Low current MS16
	MS17LC =	Electrical w/ 4 pin Brad Harrison male connector
Electrical with Thermal Lockout	MS5T =	MS5 (see above) w/ thermal lockout
	MS5LCT =	Low current MS5T
	MS10T =	MS10 (see above) w/ thermal lockout
	MS10LCT =	Low current MS10T
	MS12T =	MS12 (see above) w/ thermal lockout
	MS12LCT =	Low current MS12T
	MS16T =	MS16 (see above) w/ thermal lockout
	MS16LCT =	Low current MS16T
	MS17LCT =	Low current MS17T
	MS13DC =	Supplied w/ threaded connector & light
	MS14DC =	Supplied w/ 5 pin Brad Harrison connector & light (male end)
Electrical Visual with Thermal Lockout	MS13DCT =	MS13 (see above), direct current, w/ thermal lockout
	MS13DCLCT =	Low current MS13DCT
	MS14DCT =	MS14 (see above), direct current, w/ thermal lockout
	MS14DCLCT =	Low current MS14DCT

NOTES:

Box 3. Replacement element part numbers are identical to contents of Boxes 3 and 4.

Box 4. For options V and W, all aluminum parts are anodized. Viton® is a registered trademark of DuPont Dow Elastomers.

High-Pressure Servo Sandwich Filter

NOF50

Model No. of filter in photograph is NOF501SVZX3760.

Features and Benefits

- Localized protection at the servo helps to eliminate downtime and protect critical applications from contamination-related servo valve failures
- Sandwich style 4-bolt design – no additional lines to connect
- Designed to protect these commonly installed servo valves: Moog 761 & 62, Vickers SM4-20 and Parker BD15
- High collapse elements, rated to 3000 psi (210 bar)
- Easily applied to new and existing systems
- All steel construction

15 gpm
57 L/min
5000 psi
345 bar

Filter Housing Specifications

Flow Rating:	Up to 15 gpm (57 L/min) for 150 SUS (32 cSt) fluids
Max. Operating Pressure:	5000 psi (345 bar)
Min. Yield Pressure:	15,000 psi (1034 bar), per NFPA T2.6.1
Rated Fatigue Pressure:	4000 psi (276 bar) per NFPA T2-6.1 R2-2005
Temp. Range:	-20°F to 225°F (-29°C to 107°C)
Non-Bypass Model:	Standard with high collapse elements
Porting Head: Element Case:	Steel Steel
Weight of NOF50-1SV:	17 lb. (7.7 kg)
Element Change Clearance:	4.50" (115 mm)

Fluid Compatibility

Type Fluid	Appropriate Schroeder Media
Petroleum Based Fluids	All Z-Media® (synthetic)
High Water Content	3, 10 and 25 µ Z-Media® (synthetic)
Invert Emulsions	10 and 25 µ Z-Media® (synthetic)
Water Glycols	3, 10 and 25 µ Z-Media® (synthetic)

NOF50 High-Pressure Servo Sandwich Filter

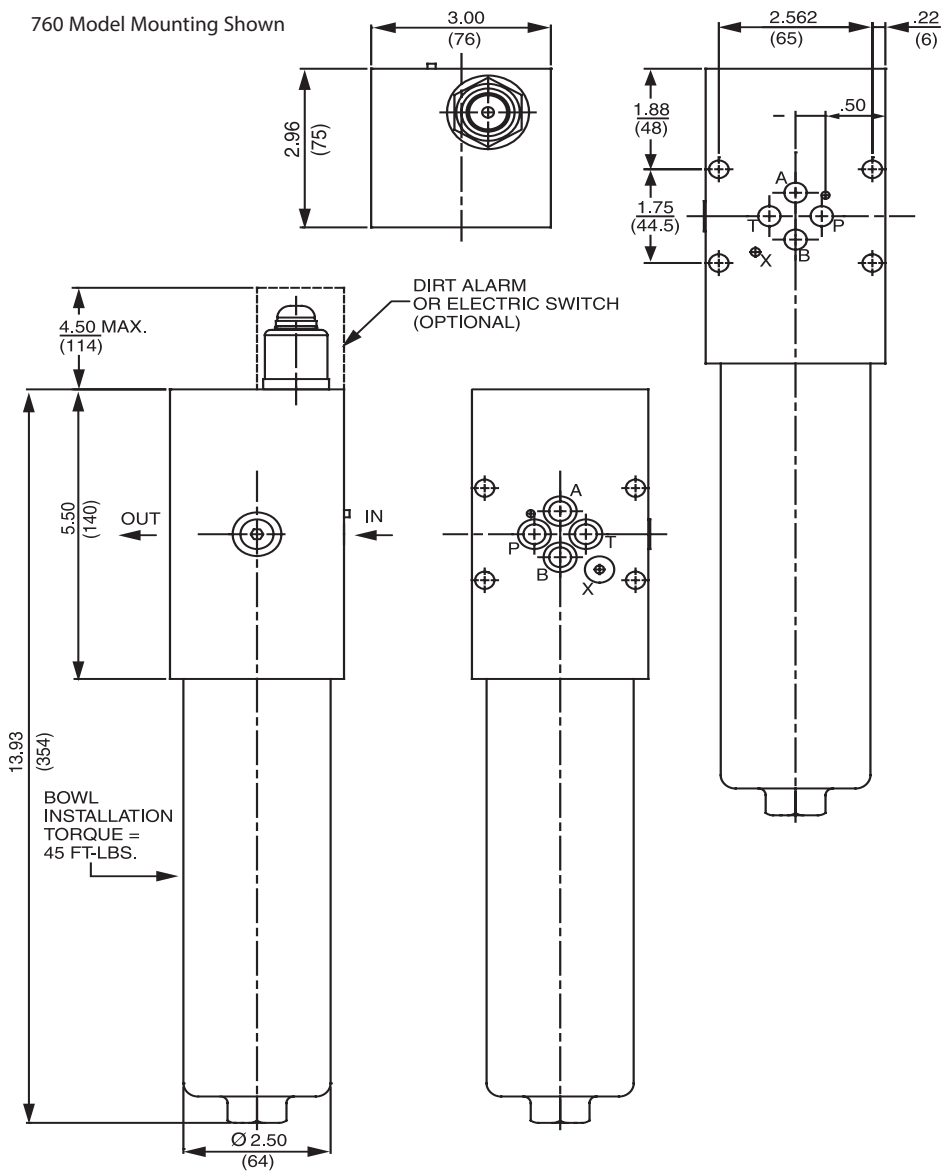

Metric dimensions in ( ).
Dimensions shown are inches (millimeters) for general information and overall envelope size only.
For complete dimensions please contact Schroeder Industries to request a certified print.

Element Performance Information & Dirt Holding Capacity

	Filtration Ratio Per ISO 4572/NFPA T3.10.8.8 Using automated particle counter (APC) calibrated per ISO 4402			Filtration Ratio per ISO 16889 Using APC calibrated per ISO 11171	
Element	$ß_x \geq 75$	$ß_x \geq 100$	$ß_x \geq 200$	$ß_{x(c)} \geq 200$	$ß_{x(c)} \geq 1000$
SVZX3	<1.0	<1.0	<2.0	4.7	5.8
SVZX10	7.4	8.2	10.0	8.0	9.7

Element	DHC (gm)
SVZX3	11*
SVZX10	13*

*Based on 100 psi terminal pressure

Element Collapse Rating: 3000 psid (210 bar) for high collapse (ZX) versions

Flow Direction: Outside In

Element Nominal Dimensions: 1.75" (45 mm) O.D. x 8.0" (200 mm) long

Pressure Drop Information

Based on Flow Rate and Viscosity

$\Delta P_{housing}$

NOF50 $\Delta P_{housing}$ for fluids with sp gr (specific gravity) = 0.86:

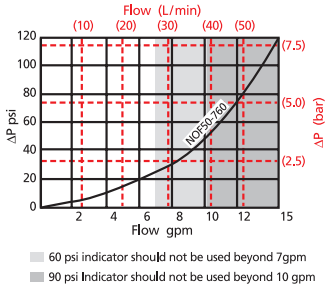

$\Delta P_{element}$

1SVZX

Element Pressure Drop versus Flow Rate at 32 cSt (150 SUS)

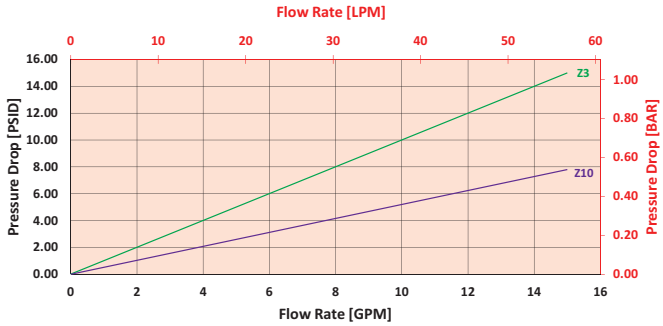

$$\Delta P_{filter} = \Delta P_{housing} + (\Delta P_{element} * V_f)$$

Exercise:

Determine ΔP_{filter} at 5 gpm (19 L/min) for NOF501SVZX10760D5 using 160 SUS (34 cSt) fluid.

Use the housing pressure curve to determine $\Delta P_{housing}$ at 5 gpm. In this case, $\Delta P_{housing}$ is 15 psi (1 bar) on the graph for the NOF30 housing.

Use the element pressure curve to determine $\Delta P_{element}$ at 5 gpm. In this case, $\Delta P_{element}$ is 3 psi (.21 bar) according to the graph for the SVZX10 element.

Because the viscosity in this sample is 160 SUS (34 cSt), we determine the Viscosity Factor (V_f) by dividing the Operating Fluid Viscosity with the Standard Viscosity of 150 SUS (32 cSt). To best determine your Operating Fluid Viscosity, please reference the chart in Appendix D.

Finally, the overall filter pressure differential, ΔP_{filter}, is calculated by adding $\Delta P_{housing}$ with the true element pressure differential, ($\Delta P_{element}$*V_f). The $\Delta P_{element}$ from the graph has to be multiplied by the viscosity factor to get the true pressure differential across the element.

Solution:

$\Delta P_{housing}$ = 15 psi [1 bar] | $\Delta P_{element}$ = 3 psi [.21 bar]

V_f = 160 SUS (34 cSt) / 150 SUS (32 cSt) = 1.1

ΔP_{filter} = 15 psi + (3 psi * 1.1) = 18.3 psi

OR

ΔP_{filter} = 1 bar + (.21 bar * 1.1) = 1.2 bar

NOF50 High-Pressure Servo Sandwich Filter

Filter Model Number Selection

How to Build a Valid Model Number for a Schroeder NOF50:

BOX 1	BOX 2	BOX 3	BOX 4	BOX 5	BOX 6	BOX 7	BOX 8
NOF50 –	–	–	–	–	–	–	–

Example: NOTE: One option per box

BOX 1	BOX 2	BOX 3	BOX 4	BOX 5	BOX 6	BOX 7	BOX 8	
NOF50 –	1 –	SVZX3 –	–	760 –	–	–	D5	= NOF501SVZX3760D5

BOX 1 — Filter Series

Filter Series
NOF50

BOX 2 — Number of Elements

Number of Elements
1

BOX 3 — Element Part Number

SVZX3	= S size 3 µ high collapse media
SVZX10	= S size 10 µ high collapse media
SVZX25	= S size 25 µ high collapse media

BOX 4 — Seal Material

Omit	= Buna N
V	= Viton®

BOX 5 — Porting

760	= Moog servo configuration
761	= Moog servo configuration

BOX 6 — Options

Omit	= 60 psid
90	= 90 psid

BOX 7 — Optional Test Point

Omit	= None
U	= Series 1215 7/16"-20 UNF Schroeder Check Test Point installation

BOX 8 — Dirt Alarm® Options

None	Omit =	None
Visual	D5 =	Visual pop-up
Visual with Thermal Lockout	D8 =	Visual w/ thermal lockout
Electrical	MS5 =	Electrical w/ 12 in. 18 gauge 4-conductor cable
	MS5LC =	Low current MS
	MS10 =	Electrical w/ DIN connector (male end only)
	MS10LC =	Low current MS10
	MS11 =	Electrical w/ 12 ft. 4-conductor wire
	MS12 =	Electrical w/ 5 pin Brad Harrison connector (male end only)
	MS12LC =	Low current MS12
	MS16 =	Electrical w/ weather-packed sealed connector
	MS16LC =	Low current MS16
	MS17LC =	Electrical w/ 4 pin Brad Harrison male connector
Electrical with Thermal Lockout	MS5T =	MS5 (see above) w/ thermal lockout
	MS5LCT =	Low current MS5T
	MS10T =	MS10 (see above) w/ thermal lockout
	MS10LCT =	Low current MS10T
	MS12T =	MS12 (see above) w/ thermal lockout
	MS12LCT =	Low current MS12T
	MS16T =	MS16 (see above) w/ thermal lockout
	MS16LCT =	Low current MS16T
	MS17LCT =	Low current MS17T
Electrical Visual	MS13 =	Supplied w/ threaded connector & light
	MS14 =	Supplied w/ 5 pin Brad Harrison connector & light (male end)
Electrical Visual with Thermal Lockout	MS13DCT =	MS13 (see above), direct current, w/ thermal lockout
	MS13DCLCT =	Low current MS13DCT
	MS14DCT =	MS14 (see above), direct current, w/ thermal lockout
	MS14DCLCT =	Low current MS14DCT

NOTES:

Box 3. Replacement element part numbers are identical to contents of Boxes 3 and 4.

Box 4. Viton® is a registered trademark of DuPont Dow Elastomers.

Box 6. Please note indicator flow limitations on pressure drop graph, previous page.

High-Pressure Sandwich Filter FOF60-03

Model No. of filter in photograph is FOF601FZX303BD5.

Features and Benefits

- Sandwich filter configured for D03 subplate pattern
- Withstands high pressure surges, high static pressure loads
- 3000 psi collapse elements

12 gpm
45 L/min
6000 psi
415 bar

Filter Housing Specifications

Flow Rating:	Up to 12 gpm (45 L/min) for 150 SUS (32 cSt) fluids
Max. Operating Pressure:	6000 psi (415 bar)
Min. Yield Pressure:	26,000 psi (1790 bar), per NFPA T2.6.1
Rated Fatigue Pressure:	4000 psi (275 bar), per NFPA T2.6.1
Temp. Range:	-20°F to 225°F (-29°C to 107°C)
Non-Bypass Model:	Available with high collapse elements
Porting Head: Element Case:	Steel Steel
Weight:	7.3 lbs. (3.3 kg)
Element Change Clearance:	4.50" (115 mm)

Fluid Compatibility

Type Fluid	Appropriate Schroeder Media
Petroleum Based Fluids	All Z-Media® (synthetic)
High Water Content	3 and 10 µ Z-Media® (synthetic)

FOF60-03 High-Pressure Sandwich Filter

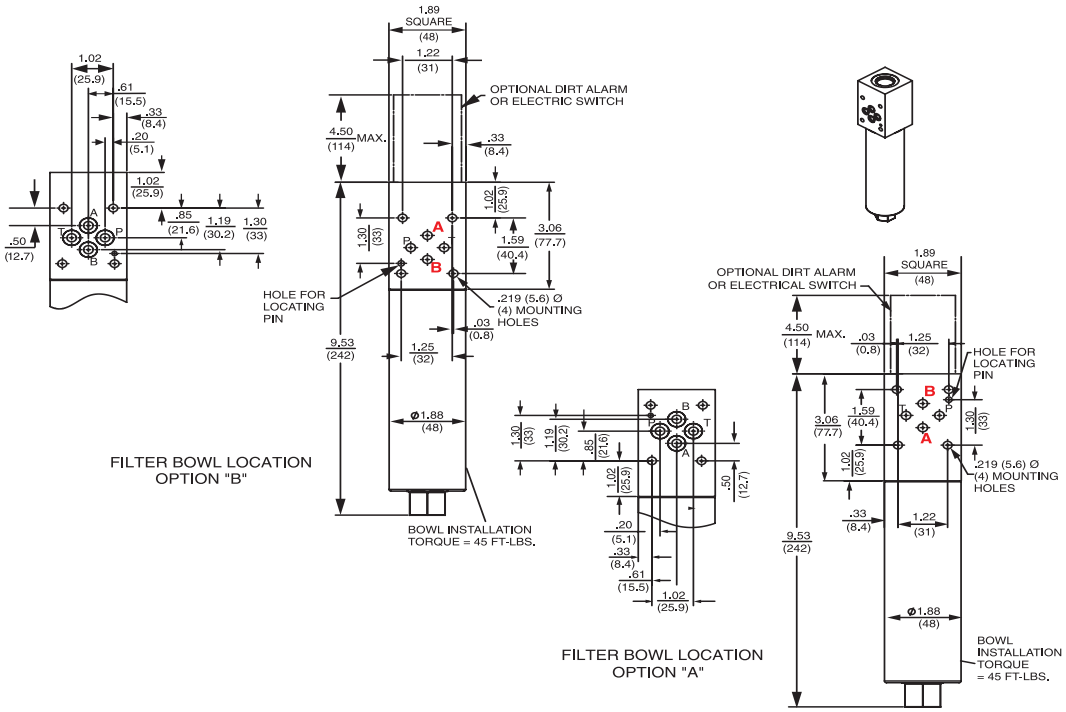

Metric dimensions in ( ).
Dimensions shown are inches (millimeters) for general information and overall envelope size only.
For complete dimensions please contact Schroeder Industries to request a certified print.

Element Performance Information & Dirt Holding Capacity

	Filtration Ratio Per ISO 4572/NFPA T3.10.8.8 Using automated particle counter (APC) calibrated per ISO 4402			Filtration Ratio per ISO 16889 Using APC calibrated per ISO 11171	
Element	$ß_x \geq 75$	$ß_x \geq 100$	$ß_x \geq 200$	$ß_{x(c)} \geq 200$	$ß_{x(c)} \geq 1000$
FZX3	<1.0	<1.0	<2.0	4.7	5.8
FZX10	7.4	8.2	10.0	8.0	9.8

Element	DHC (gm)
FZX3	3*
FZX10	5.1

Element Collapse Rating: 3000 psid (210 bar) for high collapse (ZX) versions

Flow Direction: Outside In

Element Nominal Dimensions: 1.25" (30 mm) O.D. x 3.25" (85 mm) long

*Based on 100 psi terminal pressure

Pressure Drop Information
Based on Flow Rate and Viscosity

$\Delta P_{housing}$

FOF60-03 $\Delta P_{housing}$ for fluids with sp gr (specific gravity) = 0.86:

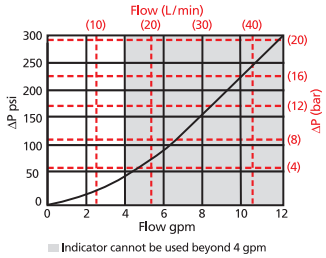

$\Delta P_{element}$

FXZ

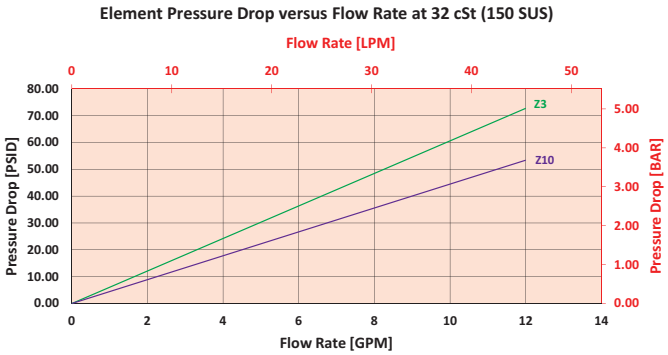

$$\Delta P_{filter} = \Delta P_{housing} + (\Delta P_{element} * V_f)$$

Exercise:

Determine ΔP_{filter} at 5 gpm (19 L/min) for FOF601FZX1003BD5 using 160 SUS (34 cSt) fluid.

Use the housing pressure curve to determine $\Delta P_{housing}$ at 5 gpm. In this case, $\Delta P_{housing}$ is 60 psi (4.1 bar) on the graph for the FOF60 housing.

Use the element pressure curve to determine $\Delta P_{element}$ at 5 gpm. In this case, $\Delta P_{element}$ is 22 psi (1.5 bar) according to the graph for the FZX10 element.

Because the viscosity in this sample is 160 SUS (34 cSt), we determine the Viscosity Factor (V_f) by dividing the Operating Fluid Viscosity with the Standard Viscosity of 150 SUS (32 cSt). To best determine your Operating Fluid Viscosity, please reference the chart in Appendix D.

Finally, the overall filter pressure differential, ΔP_{filter}, is calculated by adding $\Delta P_{housing}$ with the true element pressure differential, ($\Delta P_{element} * V_f$). The $\Delta P_{element}$ from the graph has to be multiplied by the viscosity factor to get the true pressure differential across the element.

Solution:

$\Delta P_{housing}$ = 60 psi [4.1 bar] | $\Delta P_{element}$ = 22 psi [1.5 bar]

V_f = 160 SUS (34 cSt) / 150 SUS (32 cSt) = 1.1

ΔP_{filter} = 60 psi + (22 psi * 1.1) = 64.2 psi

OR

ΔP_{filter} = 4.1 bar + (1.5 bar * 1.1) = 5.8 bar

FOF60-03 High-Pressure Sandwich Filter

Filter Model Number Selection

How to Build a Valid Model Number for a Schroeder FOF60-03:

BOX 1		BOX 2		BOX 3		BOX 4		BOX 5		BOX 6		BOX 7
FOF60	–		–		–		–		–		–	

Example: NOTE: One option per box

BOX 1		BOX 2		BOX 3		BOX 4		BOX 5		BOX 6		BOX 7	
FOF60	–	1	–	FZX3	–		–	03	–	A	–	D5	= FOF601FZX303AD5

BOX 1 Filter Series	BOX 2 Number of Elements	BOX 3 Element Part Number	BOX 4 Seal Material	BOX 5 Porting
FOF60	1	FZX3 = F size 3 µ high collapse media FZX10 = F size 10 µ high collapse media	Omit = Buna N V = Viton®	03 = D03 subplate pattern

BOX 6 Filter Bowl Location	BOX 7 Dirt Alarm® Options	
A = Bowl adjacent to Port "A" B = Bowl adjacent to Port "B" (Refer to drawing on page 140.)	None	Omit = None
	Visual	D5 = Visual pop-up
	Visual with Thermal Lockout	D8 = Visual w/ thermal lockout
	Electrical	MS5 = Electrical w/ 12 in. 18 gauge 4-conductor cable
		MS5LC = Low current MS
		MS10 = Electrical w/ DIN connector (male end only)
		MS10LC = Low current MS10
		MS11 = Electrical w/ 12 ft. 4-conductor wire
		MS12 = Electrical w/ 5 pin Brad Harrison connector (male end only)
		MS12LC = Low current MS12
		MS16 = Electrical w/ weather-packed sealed connector
		MS16LC = Low current MS16
		MS17LC = Electrical w/ 4 pin Brad Harrison male connector
	Electrical with Thermal Lockout	MS5T = MS5 (see above) w/ thermal lockout
		MS5LCT = Low current MS5T
		MS10T = MS10 (see above) w/ thermal lockout
		MS10LCT = Low current MS10T
		MS12T = MS12 (see above) w/ thermal lockout
		MS12LCT = Low current MS12T
		MS16T = MS16 (see above) w/ thermal lockout
		MS16LCT = Low current MS16T
		MS17LCT = Low current MS17T
	Electrical Visual	MS13 = Supplied w/ threaded connector & light
		MS14 = Supplied w/ 5 pin Brad Harrison connector & light (male end)
	Electrical Visual with Thermal Lockout	MS13DCT = MS13 (see above), direct current, w/ thermal lockout
		MS13DCLCT = Low current MS13DCT
		MS14DCT = MS14 (see above), direct current, w/ thermal lockout
		MS14DCLCT = Low current MS14DCT

NOTES:

Box 3. Replacement element part numbers are identical to contents of Boxes 3 and 4.

Box 4. Viton® is a registered trademark of DuPont Dow Elastomers.

Box 7. Dirt Alarm® cannot be used beyond 4 gpm. Filters ordered without a Dirt Alarm do not include a machined indicator port. Therefore, one cannot be added at a later date.

Manifold Filter Kit NMF30

Model No. of filter in photograph is NMF301NNZX10.

Features and Benefits

- Allows for effective filtration in customer's manifold

20 gpm
75 L/min
3000 psi
210 bar

Filter Housing Specifications

Flow Rating:	Up to 20 gpm (75 L/min) for 150 SUS (32 cSt) fluids
Max. Operating Pressure:	3000 psi (210 bar)*
Min. Yield Pressure:	10,000 psi (690 bar)*, per NFPA T2.6.1
Rated Fatigue Pressure:	2400 psi (185 bar)*, per NFPA T2.6.1
Temp. Range:	-20°F to 225°F (-29°C to 107°C)
Element Case:	Aluminum
Element Change Clearance:	4.50" (115 mm)

*Only with manifold material properties equivalent to aluminum 6061-T651.

Fluid Compatibility

Type Fluid
Petroleum Based Fluids
High Water Content

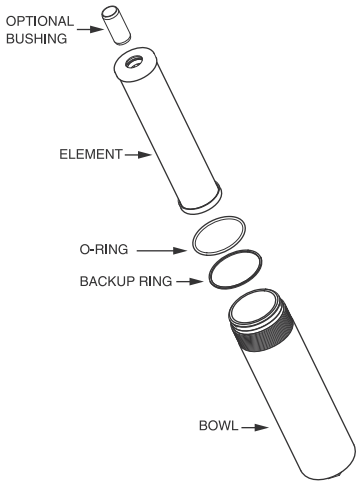

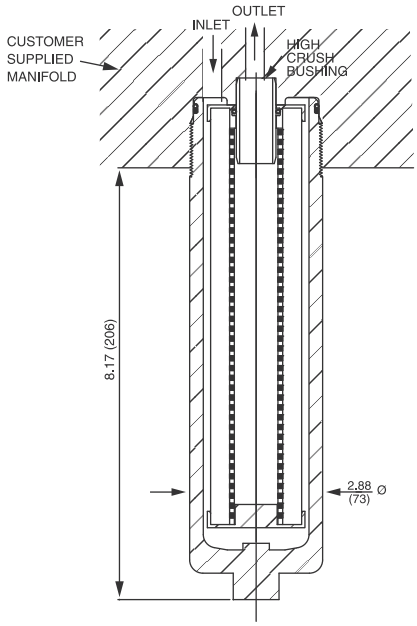

Metric dimensions in ( ).
Dimensions shown are inches (millimeters) for general information and overall envelope size only.
For complete dimensions please contact Schroeder Industries to request a certified print.

NMF30 Manifold Filter Kit

Element Performance Information & Dirt Holding Capacity

Element	Filtration Ratio Per ISO 4572/NFPA T3.10.8.8 Using automated particle counter (APC) calibrated per ISO 4402			Filtration Ratio per ISO 16889 Using APC calibrated per ISO 11171		Dirt Holding Capacity gm
	$ß_x \geq 75$	$ß_x \geq 100$	$ß_x \geq 200$	$ß_x(c) \geq 200$	$ß_x(c) \geq 1000$	
NNZX3	<1.0	<1.0	<2.0	4.7	5.8	11*
NNZX10	7.4	8.2	10.0	8.0	9.8	13*

Element	DHC (gm)
NNZX3	11*
NNZX10	13*

Element Collapse Rating: 3000 psid (210 bar)

Flow Direction: Outside In

Element Nominal Dimensions: 1.75" (45 mm) O.D. x 8.00" (200 mm) long

Filter Model Number Selection

How to Build a Valid Model Number for a Schroeder NMF30:

BOX 1		BOX 2		BOX 3		BOX 4		BOX 5
NMF30	–		–		–		–	

Example: NOTE: One option per box

BOX 1		BOX 2		BOX 3		BOX 4		BOX 5	
NMF30	–	1	–	NNZX3	–		–		= NMF301NNZX3

BOX 1 – Filter Series

Filter Series
NMF30

BOX 2 – Number of Elements

Number of Elements
1

BOX 3 – Element Part Number

NNZX3	= NN size 3 µ high collapse media
NNZX10	= NN size 10 µ high collapse media
NNZX25	= NN size 25 µ high collapse media

BOX 4 – Seal Material

Omit	= Buna N
V	= Viton®
W	= Buna N

BOX 5 – Bushing

Omit	= Included
N	= Not included

NOTES:

Box 3. Replacement element part numbers are identical to contents of Boxes 3 and 4.

Box 4. For options V and W, all aluminum parts are anodized. Viton® is a registered trademark of DuPont Dow Elastomers.

Manifold Filter Kit RMF60

Model No. of filter in photograph is RMF608RZX10.

Features and Benefits

- Allows for effective filtration in customer's manifold

30 gpm
115 L/min
6000 psi
415 bar

Filter Housing Specifications

Flow Rating:	Up to 30 gpm (115 L/min) for 150 SUS (32 cSt) fluids
Max. Operating Pressure:	6000 psi (415 bar)*
Min. Yield Pressure:	18,000 psi (1240 bar)*
Rated Fatigue Pressure:	2300 psi (159 bar)*
Temp. Range:	-20°F to 225°F (-29°C to 107°C)
Element Case:	Steel
Element Change Clearance:	3.0" (75 mm)

*Only with manifold material properties equivalent to AISI 1018 C.R.S.

Fluid Compatibility

Type Fluid
Petroleum Based Fluids
High Water Content

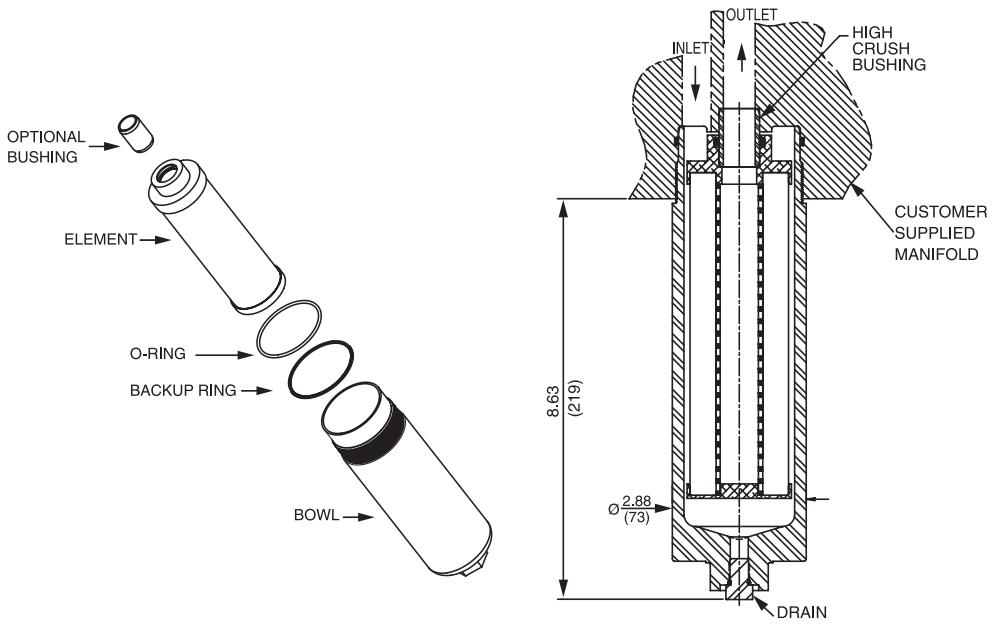

Metric dimensions in ( ).
Dimensions shown are inches (millimeters) for general information and overall envelope size only.
For complete dimensions please contact Schroeder Industries to request a certified print of drawing 7638211

RMF60 Manifold Filter Kit

Element Performance Information & Dirt Holding Capacity

Element	Filtration Ratio Per ISO 4572/NFPA T3.10.8.8 Using automated particle counter (APC) calibrated per ISO 4402			Filtration Ratio per ISO 16889 Using APC calibrated per ISO 11171	
	$ß_x \geq 75$	$ß_x \geq 100$	$ß_x \geq 200$	$ß_x(c) \geq 200$	$ß_x(c) \geq 1000$
NNZX3	<1.0	<1.0	<2.0	4.7	5.8
NNZX10	7.4	8.2	10.0	8.0	9.8

Element	DHC (gm)

Element Collapse Rating: 3000 psid (210 bar)

Flow Direction: Outside In

Element Nominal Dimensions: 2.18" (55mm) O.D. x 8.15" (206 mm) long

Filter Model Number Selection

How to Build a Valid Model Number for a Schroeder RMF60:

BOX 1		BOX 2		BOX 3		BOX 4		BOX 5
RMF60	–		–		–		–	

Example: NOTE: One option per box

BOX 1		BOX 2		BOX 3		BOX 4		BOX 5	
RMF60	–	8	–	RZX3	–		–		= RMF608RZX3

BOX 1 Filter Series	BOX 2 Element Length	BOX 3 Element Size and Media	BOX 4 Seal Material	BOX 5 Bushing
RMF60	8	RZX3 = E size 3 µ Excellement® Z-Media® (high collapse center tube) RZX10 = E size 10 µ Excellement® Z-Media® (high collapse center tube) RZX25 = E size 25 µ Excellement® Z-Media® (high collapse center tube)	Omit = Buna N V = Viton® H = EPR	Omit = Included N = Not included

NOTES:

Box 2: Replacement element part numbers are a combination of Boxes 2, 3, and 4. Example: 8RZX3V

Box 4. Viton® is a registered trademark of DuPont Dow Elastomers.

Features and Benefits (14-CRZX10)

- Cartridge filters are designed to be mounted directly in the manifold
- Withstands high pressure surges–3000 psi (210 bar) collapse rating

6 gpm
23 L/min
3000 psi
210 bar

Filter Housing Specifications

Max. Operating Pressure:	3000 psi (210 bar)
Temp. Range:	-20°F to 225°F (-29°C to 107°C)
Element Change Clearance:	14-CRZX10: 4.50" (115 mm)

Fluid Compatibility

Type Fluid	Appropriate Schroeder Media
Petroleum Based Fluids	All Z-Media® (synthetic)
High Water Content	3 and 10 µ Z-Media® (synthetic)

Element Performance Information & Dirt Holding Capacity

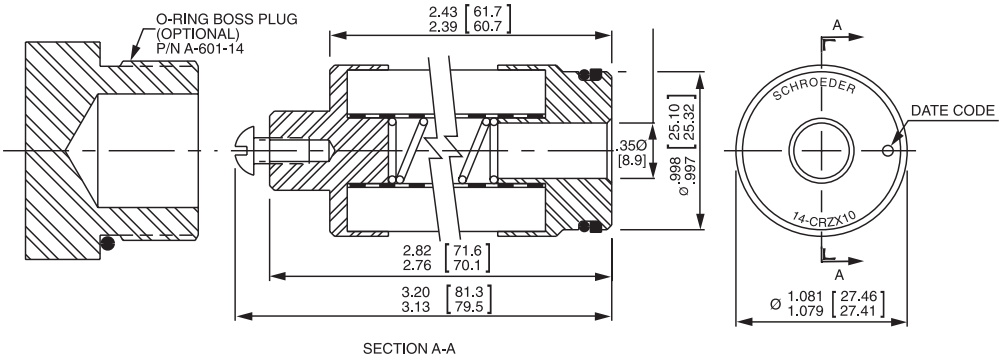

Metric dimensions in ( ).
Dimensions shown are inches (millimeters) for general information and overall envelope size only.
For complete dimensions please contact Schroeder Industries to request a certified print.

	Filtration Ratio Per ISO 4572/NFPA T3.10.8.8 Using automated particle counter (APC) calibrated per ISO 4402			Filtration Ratio per ISO 16889 Using APC calibrated per ISO 11171	
Element	$ß_x \geq 75$	$ß_x \geq 100$	$ß_x \geq 200$	$ß_x(c) \geq 200$	$ß_x(c) \geq 1000$
ZX10	7.4	8.2	10.0	8.0	9.8

Contact factory for other media options.

Element	DHC (gm)

Element Collapse Rating:	3000 psid (210 bar) for high collapse (ZX) versions
Flow Direction:	Outside In
Element Nominal Dimensions:	

Filter Model Number Selection

How to Build a Valid Model Number for a Schroeder 14-CRZX10:

BOX 1		BOX 2
14-CRZX10	–	

Example: NOTE: One option per box

BOX 1		BOX 2	
14-CRZX10	–	P	= 14-CRZX10P

BOX 1	BOX 2
Filter Series	Number of Elements
14-CRZX10	Omit = No Plug P = Plug

NOTES:

Box 2: Replacement element part numbers are a combination of Boxes 2, 3, and 4. Example: 8RZX3V

Box 4. Viton® is a registered trademark of DuPont Dow Elastomers.

20-CRZX10 Cartridge Element

12 gpm
45 L/min
3000 psi
210 bar

Features and Benefits (20-CRZX10)

- Cartridge filters are designed to be mounted directly in the manifold
- Withstands high pressure surges–3000 psi (210 bar) collapse rating

Filter Housing Specifications

Max. Operating Pressure:	3000 psi (210 bar)
Temp. Range:	-20°F to 225°F (-29°C to 107°C)
Element Change Clearance:	20-CRZX10: 3.50" (90 mm)

Fluid Compatibility

Type Fluid	Appropriate Schroeder Media
Petroleum Based Fluids	All Z-Media® (synthetic)
High Water Content	3 and 10 µ Z-Media® (synthetic)

Element Performance Information & Dirt Holding Capacity

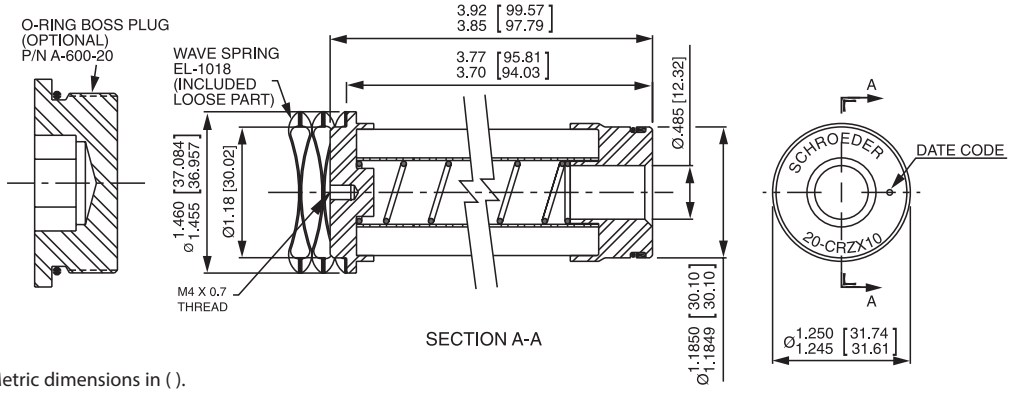

Metric dimensions in ( ).
Dimensions shown are inches (millimeters) for general information and overall envelope size only.
For complete dimensions please contact Schroeder Industries to request a certified print.

Element Performance Information & Dirt Holding Capacity

	Filtration Ratio Per ISO 4572/NFPA T3.10.8.8 Using automated particle counter (APC) calibrated per ISO 4402			Filtration Ratio per ISO 16889 Using APC calibrated per ISO 11171	
Element	$ß_x \geq 75$	$ß_x \geq 100$	$ß_x \geq 200$	$ß_{x(c)} \geq 200$	$ß_{x(c)} \geq 1000$
ZX10	7.4	8.2	10.0	8.0	9.8

Contact factory for other media options.

Element	DHC (gm)

Element Collapse Rating:	3000 psid (210 bar) for high collapse (ZX) versions
Flow Direction:	Outside In
Element Nominal Dimensions:	

*Based on 100 psi terminal pressure

Filter Model Number Selection

How to Build a Valid Model Number for a Schroeder 20-CRZX10:

BOX 1		BOX 2
20-CRZX10	–	

Example: NOTE: One option per box

BOX 1		BOX 2	
20-CRZX10	–	P	= 20-CRZX10P

BOX 1 Filter Series	BOX 2 Number of Elements
20-CRZX10	Omit = No Plug P = Plug

NOTES:

Box 2: Replacement element part numbers are a combination of Boxes 2, 3, and 4. Example: 8RZX3V

Box 4. Viton® is a registered trademark of DuPont Dow Elastomers.

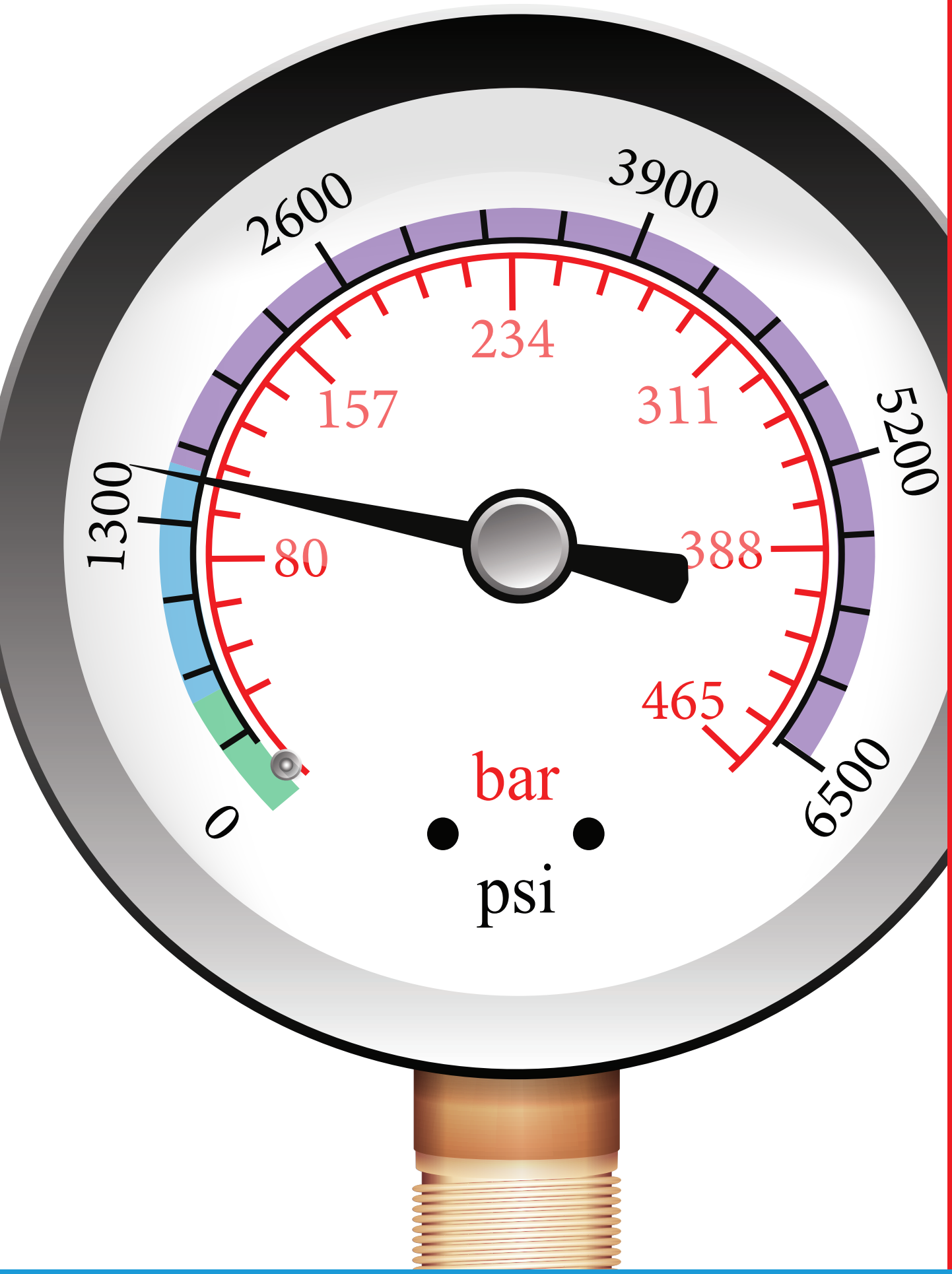

Section 4:
up to 1500 psi

MEDIUM PRESSURE FILTERS

v.040224

Section 4 Medium Pressure Filters Selection Guide

Medium Pressure Filters (up to 1500 psi)	Pressure psi (bar)	Flow gpm (L/min)	Element Length/Size	Page
Top-Ported Medium Pressure Return Line Filters				
GH QUALITY PROTECTION	725 (50)	35 (130)	6G, 9G	163
RLT	1400 (97)	70 (265)	9V, 14V	169
KF5 QUALITY PROTECTION	500 (35)	100 (380)	K	173
SRLT	1400 (100)	25 (100)	6R	177
Base-Ported Medium Pressure Filters				
K9 QUALITY PROTECTION	900 (60)	100 (380)	K, KK, 27K	181
2K9 QUALITY PROTECTION	900 (60)	100 (380)	K, KK, 27K	185
3K9 QUALITY PROTECTION	900 (60)	100 (380)	K, KK, 27K	185
QF5	500 (35)	300 (1135)	16Q, 16QCLQF, 16QPML, 39Q, 39QCLQF, 39QPML	189
QF5i	500 (35)	120 (454)	16QCLQF, 39QCLQF	193
2QF5	500 (35)	300 (1135)	16Q, 16QCLQF, 16QPML, 39Q, 39QCLQF, 39QPML	197
3QF5	500 (35)	300 (1135)	16Q, 16QCLQF, 16QPML, 39Q, 39QCLQF, 39QPML	197
QFD5	500 (35)	350 (1325)	16Q, 16QCLQF, 16QPML, 39Q, 39QCLQF, 39QPML	201
QF15	1500 (100)	450 (1700)	16Q, 16QCLQF, 16QPML, 39Q, 39QCLQF, 39QPML	205
QLF15	1500 (100)	500 (1900)	16Q, 16QCLQF, 16QPML, 39Q, 39QCLQF, 39QPML	209
SSQLF15	1500 (100)	500 (1900)	16Q, 16QPML, 39Q, 39QPML	213

Model No. of filters in photograph are GH6, GH9, GH11, and GH14.

Features and Benefits

- Variety of differential indicator port options (visual and electrical indicators)
- Leak proof bar indicator, rugged visual indicator with protective aluminum shield is standard
- Proprietary bowl to element seal - minimizes potential leakage point by use of one seal on element
- Cartridge style element (non spin-on) that is proprietary and patented with integrated bypass valve features
- Wide variety of media grades that can be application specific
- Light weight bowl design with replaceable element minimizes landfill waste
- Mounting interchangeability with competitor's filter head
- The inherent capability to pre-print the perforated outer element wrap provides a branding solution that helps to capture after-market replacement element sales
- GH6 – Bolt up cartridge element replacement for the Donaldson DURAMAX HMK04 w/ 5.9" Spin-On Can
- GH9 – Bolt up cartridge element replacement for the Donaldson DURAMAX HMK04 w/ 9.4" Spin-On Can
- GH11 – Bolt up cartridge element replacement for the Donaldson DURAMAX HMK05 w/ 11.6" Spin-On Can
- GH14 – Bolt up cartridge element replacement for the Donaldson DURAMAX HMK05 w/ 14.3" Spin-On Can
- Same day shipment model available (GH6 & GH9)

Part of Schroeder Industries Energy Savings Initiative

35-112 gpm
130-425 L/min
500-725 psi
35-50 bar

Filter Housing Specifications

	GH6	GH9	GH11	GH14
Flow Rating: (150 SUS (32 cSt) fluids)	Up to 35 gpm (130 L/min)	Up to 35 gpm (130 L/min)	Up to 87 gpm (325 L/min)	Up to 112 gpm (425 L/min)
Max. Operating Pressure:	725 psi (50 bar)	725 psi (50 bar)	500 psi (35 bar)	500 psi (35 bar)
Min. Yield Pressure:	2600 psi (179 bar)	2600 psi (179 bar)	2700 psi (186 bar)	2700 psi (186 bar)
Rated Fatigue Pressure:	725 psi (50 bar)	725 psi (50 bar)	500 psi (35 bar)	500 psi (35 bar)
Temp. Range:	-20°F to 225°F (-29°C to 107°C)	-20°F to 225°F (-29°C to 107°C)	-22°F to 212°F (-30°C to 100°C)	-22°F to 212°F (-30°C to 100°C)
Bypass Setting:	25 psi (1.7 bar) standard 50 psi (3.5 bar) optional Non-Bypassing	25 psi (1.7 bar) standard 50 psi (3.5 bar) optional Non-Bypassing	43 psi (3 bar) standard 87 psi (6 bar) optional Non-Bypassing	43 psi (3 bar) standard 87 psi (6 bar) optional Non-Bypassing
Porting Head:	Cast Aluminum	Cast Aluminum	Cast Aluminum	Cast Aluminum
Element Case:	Aluminum	Aluminum	Aluminum	Aluminum
Weight:	3.2 lbs (1.4 kg)	3.8 lbs (1.7 kg)	8.0 lbs (3.6 kg)	10.0 lbs (4.5 kg)
Element Change Clearance:	2" (50 mm)	2" (50 mm)	7.4" (187 mm)	7.4" (187 mm)

Fluid Compatibility

Type Fluid	Appropriate Schroeder Media
Petroleum Based Fluids	All media (synthetic) and H media (Hydraspin)

HydraSPIN Filter Series

Dimensions (GH6 & GH9)

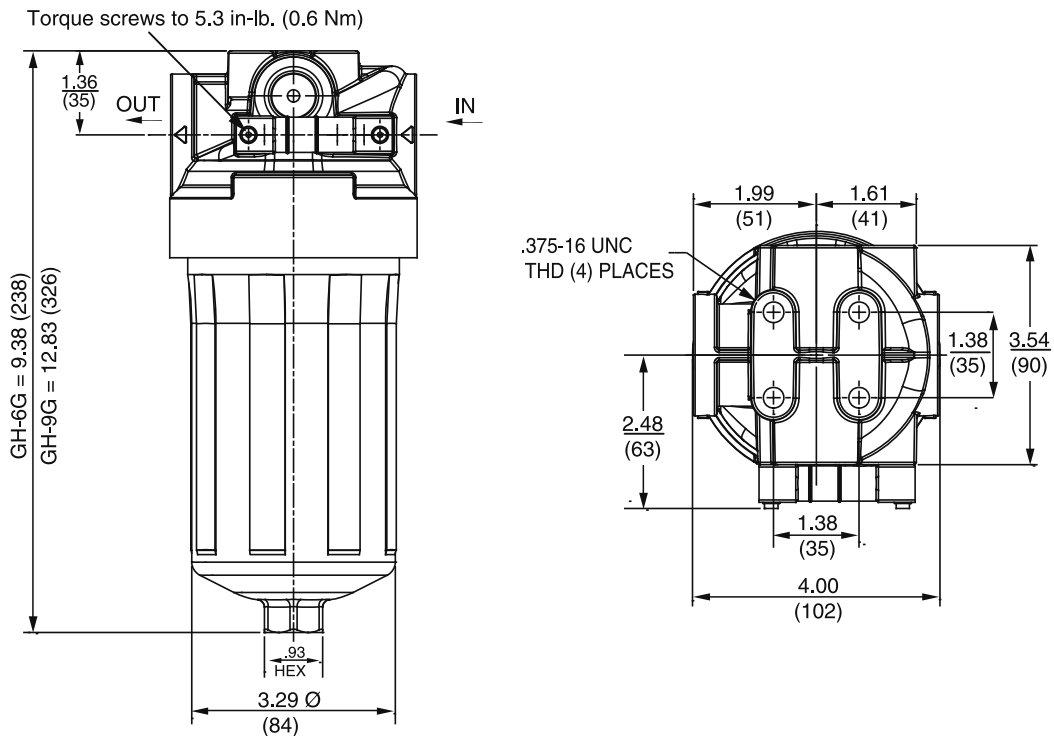

Metric dimensions in ( ).

Element Performance Information & Dirt Holding Capacity

Media Type	Element	Filtration Ratio Per ISO 4572/NFPA T3.10.8.8 Using automated particle counter (APC) calibrated per ISO 4402			Filtration Ratio per ISO 16889 Using APC calibrated per ISO 11171	
		$ß_x \geq 75$	$ß_x \geq 100$	$ß_x \geq 200$	$ß_x(c) \geq 200$	$ß_x(c) \geq 1000$
Resin Impregnated Cellulose Media	6G3/9G3	6.8	7.5	10.0	N/A	N/A
	6G10/9G10	15.5	16.2	18.0	N/A	N/A
Traditional Excellement® Z-Media®	6GZ3 / 9GZ3	<1.0	<1.0	<2.0	<4.0	4.8
	6GZ5 / 9GZ5	2.5	3.0	4.0	4.8	6.3
	6GZ10 / 9GZ10	7.4	8.2	10.0	8.0	10.0
	6GZ25 / 9GZ25	18.0	20.0	22.5	19.0	24.0
Hydraspin H Media, designed to specifically reduce filter pressure drop	6GH10/ 9GH10	N/A	N/A	N/A	10.6	13.0

Media Type	Element	DHC (gm)
Resin Impregnated Cellulose Media	6G3/9G3	18/30
	6G10/9G10	15/25
Traditional Excellement® Z-Media®	6GZ3 / 9GZ3	30/51
	6GZ5 / 9GZ5	24.5/42
	6GZ10 / 9GZ10	31/49
	6GZ25 / 9GZ25	34/58
Hydraspin H Media, designed to specifically reduce filter pressure drop	6GH10/9GH10	12/20

Element Collapse Rating: 250 psid (17.2 bar) for standard and non-bypassing elements

Flow Direction: Outside In

Element Nominal Dimensions: 6G: 3.25" (82 mm) O.D. x 5.7" (144 mm) long
9G: 3.25" (82 mm) O.D. x 9.0" (229 mm) long

Dimensions (GH11 & GH14)

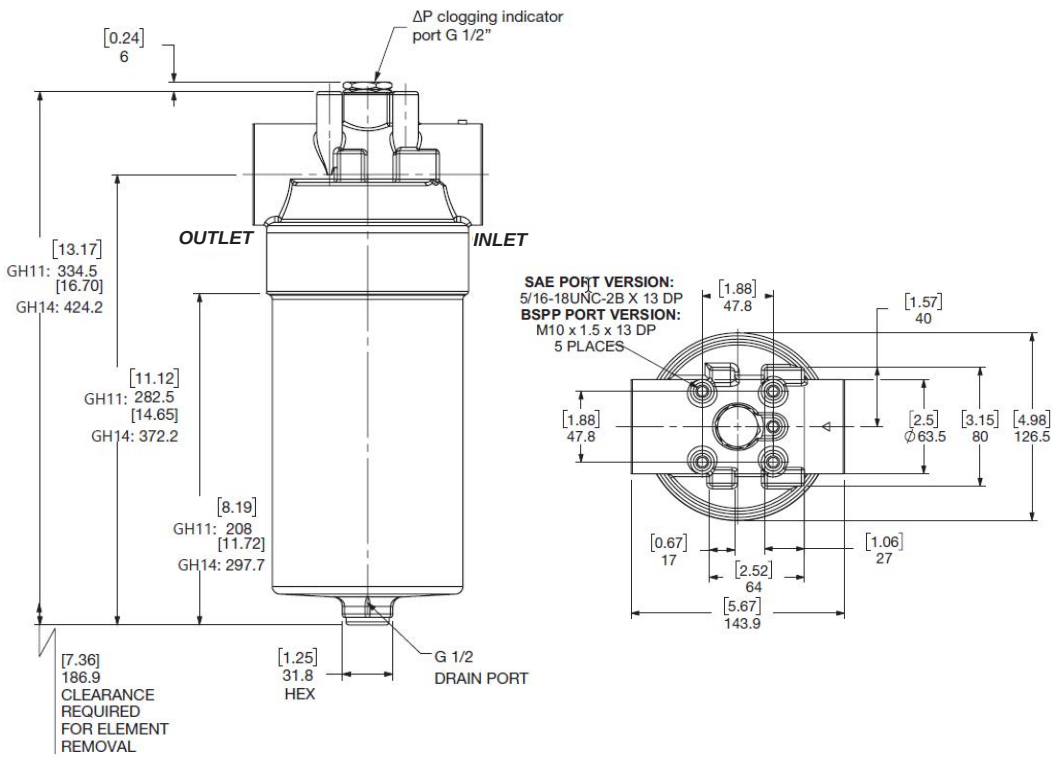

Metric dimensions in ( ).

Element Performance Information & Dirt Holding Capacity

Media Type	Element	Filtration Ratio Per ISO 4572/NFPA T3.10.8.8 Using automated particle counter (APC) calibrated per ISO 4402			Filtration Ratio per ISO 16889 Using APC calibrated per ISO 11171	
		$ß_x \geq 75$	$ß_x \geq 100$	$ß_x \geq 200$	$ß_x(c) \geq 200$	$ß_x(c) \geq 1000$
Traditional Excellement® Z-Media®	11GZ3/14GZ3	<1.0	<1.0	<2.0	<4.0	4.8
	11GZ5/14GZ5	2.5	3.0	4.0	4.8	6.3
	11GZ10/14GZ10	7.4	8.2	10.0	8.0	10.0
	11GZ25 /14GZ25	18.0	20.0	22.5	19.0	24.0

Media Type	Element	DHC (gm)
Traditional Excellement® Z-Media®	11GZ3/14GZ3	53/75
	11GZ5/14GZ5	75/105
	11GZ10/14GZ10	60/84
	11GZ25/14GZ25	61/85

Element Collapse Rating: 290 psid (17.2 bar) for standard and non-bypassing elements

Flow Direction: Outside In

Element Nominal Dimensions: 11G: 3.7" (94 mm) O.D. x 7.6" (193 mm) long
14G: 3.7" (94 mm) O.D. x 11.1" (282 mm) long

Pressure Drop Information (GH6 & GH9)

Based on Flow Rate and Viscosity

$\Delta P_{housing}$

GH $\Delta P_{housing}$ for fluids with sp gr (specific gravity) = 0.86:

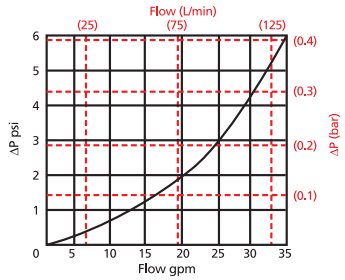

$\Delta P_{element}$

6GZ

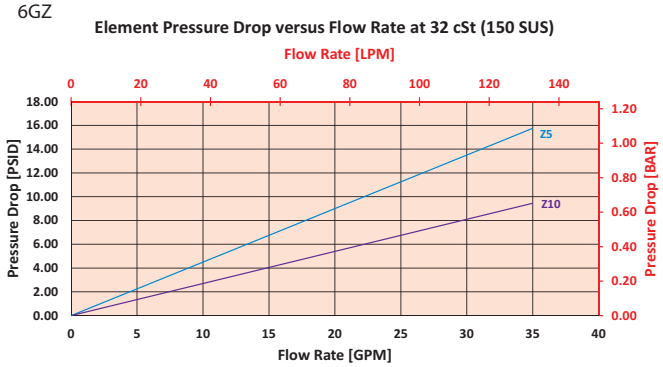

9GZ

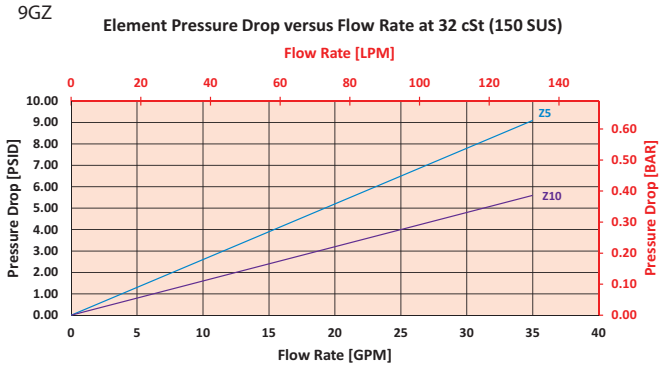

$$\Delta P_{filter} = \Delta P_{housing} + (\Delta P_{element} * V_f)$$

Exercise:

Determine ΔP_{filter} at 15 gpm (57 L/min) for GH6GZ10S12L using 160 SUS (34 cSt) fluid.

Use the housing pressure curve to determine $\Delta P_{housing}$ at 15 gpm. In this case, $\Delta P_{housing}$ is 1.5 psi (0.10 bar) on the graph for the GH housing.

Use the element pressure curve to determine $\Delta P_{element}$ at 15 gpm. In this case, $\Delta P_{element}$ is 4 psi (0.27 bar) according to the graph for the 6GZ10 element.

Because the viscosity in this sample is 160 SUS (34 cSt), we determine the Viscosity Factor (V_f) by dividing the Operating Fluid Viscosity with the Standard Viscosity of 150 SUS (32 cSt). To best determine your Operating Fluid Viscosity, please reference the chart in Appendix D.

Finally, the overall filter pressure differential, ΔP_{filter}, is calculated by adding $\Delta P_{housing}$ with the true element pressure differential, ($\Delta P_{element}$*V_f). The $\Delta P_{element}$ from the graph has to be multiplied by the viscosity factor to get the true pressure differential across the element.

Solution:

$\Delta P_{housing}$ = 1.5 psi [0.10 bar] | $\Delta P_{element}$ = 4 psi [0.27 bar]

V_f = 160 SUS (34 cSt) / 150 SUS (32 cSt) = 1.1

ΔP_{filter} = 1.5 psi + (4 psi * 1.1) = 5.9 psi

OR

ΔP_{filter} = 0.10 bar + (0.27 bar * 1.1) = 0.40 bar

Note:
If your element is not graphed, you can obtain your $\Delta P_{element}$ by multiplying the flow rate by the following: $\Delta P_{element}$ Factors x VP (Visc. Factor)

$\Delta P_{element}$ Factors @ 150 SUS (32 cSt)

Ele.	ΔP	Ele.	ΔP
6G3	0.60	9G3	0.35
6G10	0.40	9G10	0.24
6G25	0.08	9G25	0.05
6GH10	C/F	9GH10	C/F
6GZ3	0.60	9GZ3	0.35
6GZ25	C/F	9GZ25	C/F

Pressure Drop Information (GH11 & GH14)

Based on Flow Rate and Viscosity

$\Delta P_{housing}$

GH $\Delta P_{housing}$ for fluids with sp gr (specific gravity) = 0.86:

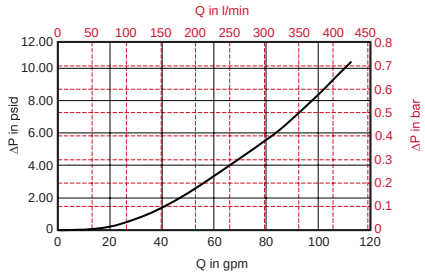

$\Delta P_{element}$

11GZ

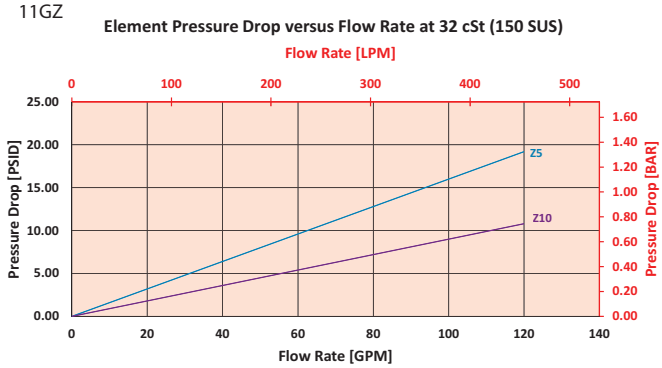

14GZ

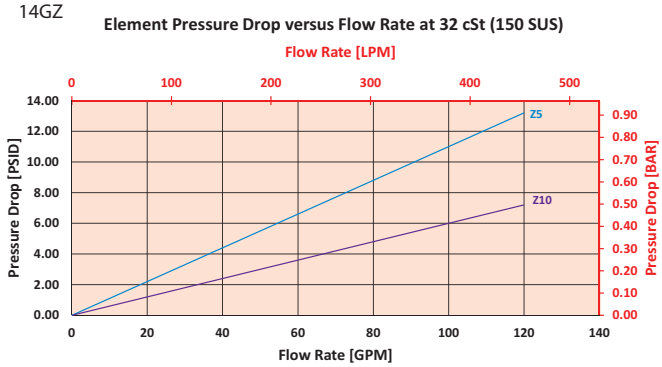

$$\Delta P_{filter} = \Delta P_{housing} + (\Delta P_{element} * V_f)$$

Exercise:

Determine ΔP_{filter} at 60 gpm (227.4 L/min) for GH11GZ10S24VA using 160 SUS (34 cSt) fluid.

Use the housing pressure curve to determine $\Delta P_{housing}$ at 60 gpm. In this case, $\Delta P_{housing}$ is 3 psi (0.21 bar) on the graph for the GH housing.

Use the element pressure curve to determine $\Delta P_{element}$ at 60 gpm. In this case, $\Delta P_{element}$ is 5 psi (0.34 bar) according to the graph for the 11GZ10 element.

Because the viscosity in this sample is 160 SUS (34 cSt), we determine the Viscosity Factor (V_f) by dividing the Operating Fluid Viscosity with the Standard Viscosity of 150 SUS (32 cSt). To best determine your Operating Fluid Viscosity, please reference the chart in Appendix D.

Finally, the overall filter pressure differential, ΔP_{filter}, is calculated by adding $\Delta P_{housing}$ with the true element pressure differential, ($\Delta P_{element}$*V_f). The $\Delta P_{element}$ from the graph has to be multiplied by the viscosity factor to get the true pressure differential across the element.

Solution:

$\Delta P_{housing}$ = 3 psi [0.21 bar] | $\Delta P_{element}$ = 5 psi [0.34 bar]

V_f = 160 SUS (34 cSt) / 150 SUS (32 cSt) = 1.1

ΔP_{filter} = 3 psi + (5 psi * 1.1) = 8.5 psi

OR

ΔP_{filter} = 0.21 bar + (0.34 bar * 1.1) = 0.58 bar

Note:
If your element is not graphed, you can obtain your $\Delta P_{element}$ by multiplying the flow rate by the following: $\Delta P_{element}$ Factors x VP (Visc. Factor)

$\Delta P_{element}$ Factors @ 150 SUS (32 cSt)

Ele.	ΔP
11GZ3	0.21
11GZ25	0.06
14GZ3	0.14
14GZ25	0.04

HydraSPIN Filter Series

Filter Model Number Selection (GH6 & GH9

Highlighted product eligible for QuickDelivery

How to Build a Valid Model Number for a Schroeder GH6/GH9:

BOX 1	BOX 2	BOX 3	BOX 4	BOX 5	BOX 6	BOX 7
GH						

Example: NOTE: One option per box

BOX 1	BOX 2	BOX 3	BOX 4	BOX 5	BOX 6	BOX 7	
GH	6	GZ10			S16	L	= GH6GZ10S16L

BOX 1 — Filter Series

Filter Series
GH

BOX 2 — Element Length (in)

Element Length (in)
6
9

BOX 3 — Element Part Number

G3	= 3 µ E media (cellulose)
G10	= 10 µ E media (cellulose)
G25	= 25 µ E media (cellulose)
GZ3	= 3 µ Excellement® Z-Media® (synthetic)
GZ5	= 5 µ Excellement® Z-Media® (synthetic)
GZ10	= 10 µ Excellement® Z-Media® (synthetic)
GZ25	= 25 µ Excellement® Z-Media® (synthetic)
GH10	= 10 µ Excellement® Hydraspin media

BOX 4 — Bypass Setting

Omit	= 25 psid
50	= 50 psid
N	= Non-bypassing

BOX 5 — Element Seal Material

Element Seal Material
Omit = Buna N

BOX 6 — Inlet Port

S12 =	SAE-12
S16 =	SAE-16
B12 =	ISO 228 G-¾"
B16 =	ISO 228 G-1"

BOX 7 — Dirt Alarm® Options

	Omit =	None
Visual	L =	Bar indicator, left side std
	R =	Bar indicator, right side std
	B =	Bar indicators, left and right side
	VA =	Visual pop-up w/auto reset
	VM =	Visual pop-up w/manual reset
Electrical	Omit =	None
	M =	Drilled, tapped, plugged
	DTC =	DC 2 wire, normally closed (NC)
	DTO =	DC 2 wire, normally open (NO)
	DW =	AC/DC 3-wire (NO or NC)

Indicator Location Option L

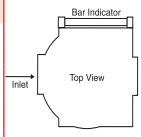

Filter Model Number Selection (GH11 & GH14)

How to Build a Valid Model Number for a Schroeder GH11/GH14:

BOX 1	BOX 2	BOX 3	BOX 4	BOX 5	BOX 6	BOX 7
GH						

Example: NOTE: One option per box

BOX 1	BOX 2	BOX 3	BOX 4	BOX 5	BOX 6	BOX 7	
GH	11	GZ10	87		S24	VA	= GH11GZ1087S24VA

BOX 1 — Filter Series

Filter Series
GH

BOX 2 — Element Length (in)

Element Length (in)
11
14

BOX 3 — Element Part Number

GZ3	= 3 µ Excellement® Z-Media® (synthetic)
GZ5	= 5 µ Excellement® Z-Media® (synthetic)
GZ10	= 10 µ Excellement® Z-Media® (synthetic)
GZ25	= 25 µ Excellement® Z-Media® (synthetic)

BOX 4 — Bypass Setting

Omit	= 47 psid
87	= 87 psid
N	= Non-bypassing

BOX 5 — Element Seal Material

Element Seal Material
Omit = Buna N
V = Viton

BOX 6 — Inlet Port

Inlet Port
B24 = ISO 228 G-1½"
S24 = SAE 24 Straight Thread Ports

BOX 7 — Dirt Alarm® Options

	Omit = None
Visual	VA = Visual pop-up w/auto reset
	VM = Visual pop-up w/manual reset
	VF = Visual analog
Electrical	EC = Electrical switch - SPDT
	ED = Electrical switch and LED light - SPDT

NOTES:

Box 2. Replacement element part numbers are a combination of Boxes 2, 3 and 4. Replacement elements contain bypass. For 50 psid setting or non-bypassing version, element part number includes suffix. Examples: 11GZ1050, 14GZ10N.

Box 7. VA and VM indicators are available with 50 psid bypass element only.

Medium Pressure Filter RLT

Model No. of filter in photograph is RLT9VZ10P20D5.

Features and Benefits

- Durable, compact design
- Quick and easy cartridge element changeouts
- Available in 9" and 14" element lengths
- Lightweight at 8 pounds
- Offered in pipe, SAE straight thread, flange and ISO 228 porting
- Available with NPTF inlet and outlet female test ports
- Various Dirt Alarm® options
- Same day shipment model available

70 gpm
265 L/min
1400 psi
97 bar

Filter Housing Specifications

Flow Rating:	Up to 70 gpm (265 L/min) for 150 SUS (32 cSt) fluids for P20, S20, & B20 porting Up to 50 gpm (190 L/min) for 150 SUS (32 cSt) fluids for P16, S16, F16, F20 & B16 porting
Max. Operating Pressure:	1400 psi (97 bar)
Min. Yield Pressure:	4200 psi (290 bar) , per NFPA T2.6.1
Rated Fatigue Pressure:	415 psi (29 bar), per NFPA T2.6.1-R1-2005
Temp. Range:	-20°F to 225°F (-29°C to 107°C)
Bypass Setting:	Cracking: 40 psi (2.8 bar) for all porting Full Flow: 57 psi (3.9 bar) for P20 & S20 porting Full Flow: 75 psi (5.2 bar) for P16, S16, F16 & F20 porting
Porting Head:	Aluminum
Element Case:	Aluminum
Weight of RLT-9V:	6.7 lbs. (3.0 kg)
Weight of RLT-14V:	8.0 lbs. (3.6 kg)
Element Change Clearance:	9V & 14V: 2.75" (70 mm)

Fluid Compatibility

Type Fluid	Appropriate Schroeder Media
Petroleum Based Fluids	All E media (cellulose) and Z-Media® (synthetic)
High Water Content	All Z-Media® (synthetic)
Invert Emulsions	10 and 25 µ Z-Media® (synthetic)
Water Glycols	3, 5, 10 and 25 µ Z-Media® (synthetic)
Phosphate Esters	All Z-Media® (synthetic) with H (EPR) seal designation
Skydrol®	3, 5, 10 and 25 µ Z-Media® (synthetic) with H.5 seal designation (EPR seals and stainless steel wire mesh in element, and light oil coating on housing exterior)

Medium Pressure Filter

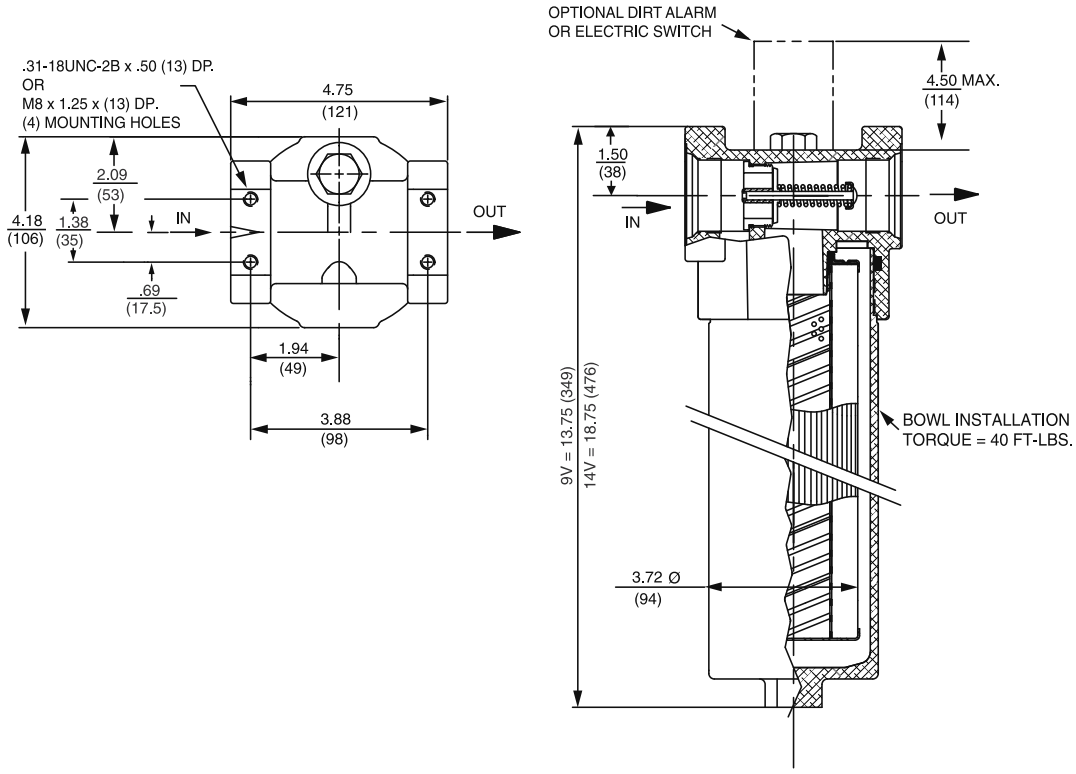

Metric dimensions in ( ).
Dimensions shown are inches (millimeters) for general information and overall envelope size only.
For complete dimensions please contact Schroeder Industries to request a certified print.

Element Performance Information & Dirt Holding Capacity

	Filtration Ratio Per ISO 4572/NFPA T3.10.8.8 Using automated particle counter (APC) calibrated per ISO 4402			Filtration Ratio per ISO 16889 Using APC calibrated per ISO 11171	
Element	$ß_x \geq 75$	$ß_x \geq 100$	$ß_x \geq 200$	$ß_x(c) \geq 200$	$ß_x(c) \geq 1000$
9VZ1/14VZ1	<1.0	<1.0	<1.0	<4.0	4.2
9VZ3/14VZ3	<1.0	<1.0	<2.0	<4.0	4.8
9VZ5/14VZ5	2.5	3.0	4.0	4.8	6.3
9VZ10/14VZ10	7.4	8.2	10.0	8.0	10.0
9VZ25/14VZ25	18.0	20.0	22.5	19.0	24.0

Element	DHC (gm)	Element	DHC (gm)
9VZ1	55	14VZ1	102
9VZ3	57	14VZ3	105
9VZ5	62	14VZ5	115
9VZ10	52	14VZ10	104
9VZ25	48	14VZ25	94

Element Collapse Rating: 150 psid (10 bar)
500 psid (34.5 bar) for hydrostatic high collapse (9V5Z and 14V5Z) version

Flow Direction: Outside In

Element Nominal Dimensions: 9V: 3.0" (75 mm) O.D. x 9.5" (240 mm) long
14V: 3.0" (75 mm) O.D. x 14.5" (370 mm) long

Pressure Drop Information

Based on Flow Rate and Viscosity

$\Delta P_{housing}$

RLT $\Delta P_{housing}$ for fluids with sp gr (specific gravity) = 0.86:

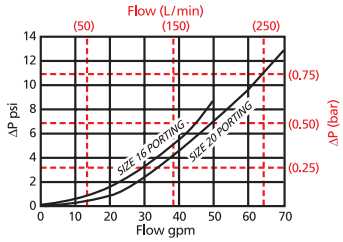

$\Delta P_{element}$

9VZ

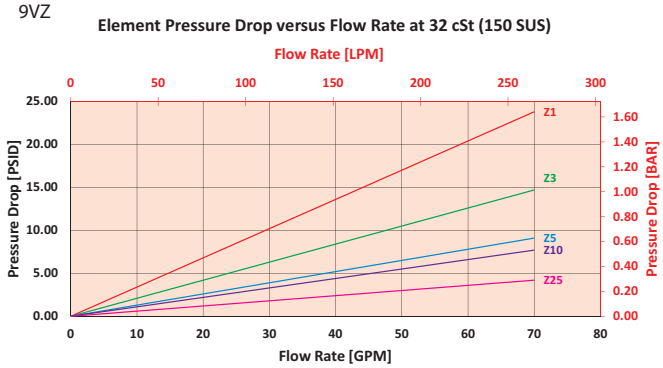

14VZ

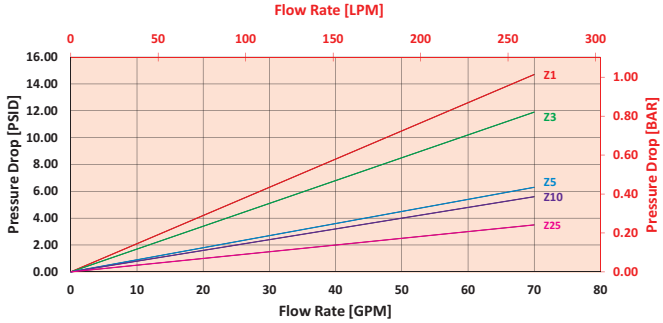

$$\Delta P_{filter} = \Delta P_{housing} + (\Delta P_{element} * V_f)$$

Exercise:

Determine ΔP_{filter} at 40 gpm (151.6 L/min) for RLT9VZ10S20D5 using 175 SUS (37.2 cSt) fluid.

Use the housing pressure curve to determine $\Delta P_{housing}$ at 40 gpm. In this case, $\Delta P_{housing}$ is 4.5 psi (.31 bar) on the graph for the RLT housing.

Use the element pressure curve to determine $\Delta P_{element}$ at 40 gpm. In this case, $\Delta P_{element}$ is 6 psi (.415 bar) according to the graph for the 9VZ10 element.

Because the viscosity in this sample is 175 SUS (37.2 cSt), we determine the Viscosity Factor (V_f) by dividing the Operating Fluid Viscosity with the Standard Viscosity of 150 SUS (32 cSt). To best determine your Operating Fluid Viscosity, please reference the chart in Appendix D.

Finally, the overall filter pressure differential, ΔP_{filter}, is calculated by adding $\Delta P_{housing}$ with the true element pressure differential, ($\Delta P_{element}$*V_f). The $\Delta P_{element}$ from the graph has to be multiplied by the viscosity factor to get the true pressure differential across the element.

Solution:

$\Delta P_{housing}$ = 4.5 psi [.31 bar] | $\Delta P_{element}$ = 4 psi [.27 bar]

V_f = 175 SUS (37.2 cSt) / 150 SUS (32 cSt) = 1.2

ΔP_{filter} = 4.5 psi + (4 psi * 1.2) = 9.3 psi

OR

ΔP_{filter} = .31 bar + (.27 bar * 1.2) = .63 bar

Note:
If your element is not graphed, use the following equation:
$\Delta P_{element}$ = Flow Rate x ΔP_f. Plug this variable into the overall pressure drop equation.

Ele.	ΔP	Ele.	ΔP
9V3	0.32	14V3	0.19
9V10	0.24	14V10	0.15

Medium Pressure Filter

Filter Model Number Selection

Highlighted product eligible for QuickDelivery

How to Build a Valid Model Number for a Schroeder RLT:

BOX 1	BOX 2	BOX 3	BOX 4	BOX 5	BOX 6	BOX 7	BOX 8
RLT –	–	–	–	–	–	–	

Example: NOTE: One option per box

BOX 1	BOX 2	BOX 3	BOX 4	BOX 5	BOX 6	BOX 7	BOX 8	
RLT –	9 –	VZ10 –	–	S20 –	–	D5		= RLT9VZ10S20D5

BOX 1 — Filter Series

Filter Series
RLT
RLTN (Non-bypassing: requires V5Z high collapse elements)
WRLT (Water)

BOX 2 — Element Length (in)

Element Length (in)
9
14

BOX 3 — Element Size and Media

VZ1	= V size 1 µ Excellement® Z-Media® (synthetic)
VZ3	= V size 3 µ Excellement® Z-Media® (synthetic)
VZ5	= V size 5 µ Excellement® Z-Media® (synthetic)
VZ10	= V size 10 µ Excellement® Z-Media® (synthetic)
VZ25	= V size 25 µ Excellement® Z-Media® (synthetic)
VW	= V size W media (water removal)
V5Z3	= V size 3 µ Excellement® media, 500 psid collapse
V5Z5	= V size 5 µ Excellement® media, 500 psid collapse
V5Z10	= V size 10 µ Excellement® media, 500 psid collapse
V5Z25	= V size 25 µ Excellement® media, 500 psid collapse
Water Service Element Options	
VM60	= V size 60 µ M media (reusable metal)
VM150	= V size 150 µ M media (reusable metal)
VM260	= V size 260 µ M media (reusable metal)

BOX 4 — Seal Material

Seal Material
Omit = Buna N
H = EPR
V = Viton®
H.5 = Skydrol® Compatibility

BOX 5 — Porting Options

P16	= 1" NPTF
P20	= 1¼" NPTF
S16	= SAE-16
S20	= SAE-20
F20	= 1¼" SAE 4-bolt flange Code 61
B16	= ISO 228 G-1"
B20	= ISO 228 G-1¼"

BOX 6 — Bypass

Omit	= 40 PSI Bypass
50	= 50 PSI Bypass
60	= 60 PSI Bypass
X	= Blocked Bypass

(Omit box 6 if a RLTN is selected)

BOX 7 — Dirt Alarm® Options

None	Omit	= None
Visual	D5	= Visual pop-up
	D8	= Visual w/ thermal lockout
Electrical	MS5	= Electrical w/ 12 in. 18 gauge 4-conductor cable
	MS5LC	= Low current MS5
	MS10	= Electrical w/ DIN connector (male end only)
	MS10LC	= Low current MS10
	MS11	= Electrical w/ 12 ft. 4-conductor wire
	MS12	= Electrical w/ 5 pin Brad Harrison connector (male end only)
	MS12LC	= Low current MS12
	MS16	= Electrical w/ weather-packed sealed connector
	MS16LC	= Low current MS16
	MS17LC	= Electrical w/ 4 pin Brad Harrison male connector
Electrical with Thermal Lockout	MS5T	= MS5 (see above) w/ thermal lockout
	MS5LCT	= Low current MS5T
	MS10T	= MS10 (see above) w/ thermal lockout
	MS10LCT	= Low current MS10T
	MS12T	= MS12 (see above) w/ thermal lockout
	MS12LCT	= Low current MS12T
	MS16T	= MS16 (see above) w/ thermal lockout
	MS16LCT	= Low current MS16T
	MS17LCT	= Low current MS17T
Electrical Visual	MS13	= Supplied w/ threaded connector & light
	MS14	= Supplied w/ 5 pin Brad Harrison connector & light (male end)
Electrical Visual with Thermal Lockout	MS13DCT	= MS13 (see above), direct current, w/ thermal lockout
	MS13DCLCT	= Low current MS13DCT
	MS14DCT	= MS14 (see above), direct current, w/ thermal lockout
	MS14DCLCT	= Low current MS14DCT

BOX 8 — Additional Options

Additional Options
Omit = None
L = Two ¼" NPTF inlet and outlet female test ports

NOTES:

Box 2. Replacement element part numbers are a combination of Boxes 2, 3, and 4. Example: 9VZ10V

Box 3. E media elements are only available with Buna N seals. V5Z10 and V5Z25 are only available with RLTN 9".

Box 4. For options H, V, and H.5, all aluminum parts are anodized. H.5 seal designation includes the following: EPR seals, stainless steel wire mesh on elements, and light oil coating on housing exterior. Viton® is a registered trademark of DuPont Dow Elastomers. Skydrol® is a registered trademark of Solutia Inc.

Box 5. B porting supplied with metric mounting holes.

Box 6. When X is paired with a standard filter series, a standard bushing and spring plate will be used.

Medium Pressure Filter KF5

Model No. of filter in photograph is KF51KZ10SD5.

Features and Benefits

- Meets HF4 automotive standard
- Offered in pipe, SAE straight thread, flange and ISO 228 porting
- Available with NPTF inlet and outlet female test ports
- KFN5 non-bypass version with high collapse elements also available
- Various Dirt Alarm® options
- Allows consolidation of inventoried replacement elements by using K-size elements
- Also available with DirtCatcher® elements (KD & KKD)
- G Available with quality-protected GeoSeal® Elements (GKF5)

100 gpm
380 L/min
500 psi
35 bar

Filter Housing Specifications

Flow Rating:	Up to 100 gpm (380 L/min) for 150 SUS (32 cSt) fluids
Max. Operating Pressure:	500 psi (35 bar)
Min. Yield Pressure:	1500 psi (100 bar) , per NFPA T2.6.1
Rated Fatigue Pressure:	300 psi (35 bar), per NFPA T2.6.1-2005
Temp. Range:	-20°F to 225°F (-29°C to 107°C)
Bypass Setting:	Cracking: 40 psi (2.8 bar) Full Flow: 61 psi (4.2 bar)
Porting Head:	Grey Cast Iron
Element Case:	Steel
Weight of KF5-1K:	23.2 lbs. (10.5 kg)
Element Change Clearance:	2.0" (51 mm)

Fluid Compatibility

Type Fluid	Appropriate Schroeder Media
Petroleum Based Fluids	All E media (cellulose), Z-Media® and ASP® media (synthetic)
High Water Content	All Z-Media® (synthetic), 3, 5 and 10 µ ASP® media (synthetic)
Invert Emulsions	10 and 25 µ Z-Media® (synthetic), 10 µ ASP® media (synthetic)
Water Glycols	3, 5, 10 and 25 µ Z-Media® (synthetic), 3, 5 and 10 µ ASP® media (synthetic)
Phosphate Esters	All Z-Media® (synthetic) with H (EPR) seal designation and 3 and 10 µ E media (cellulose) with H (EPR) seal designation, 3, 5 and 10 µ ASP® media (synthetic)
Skydrol®	3, 5, 10 and 25 µ Z-Media® (synthetic) with H.5 seal designation (EPR seals & stainless steel wire mesh in element, and light oil coating on housing exterior), 3, 5 and 10 µ ASP® media (synthetic)

Medium Pressure Filter

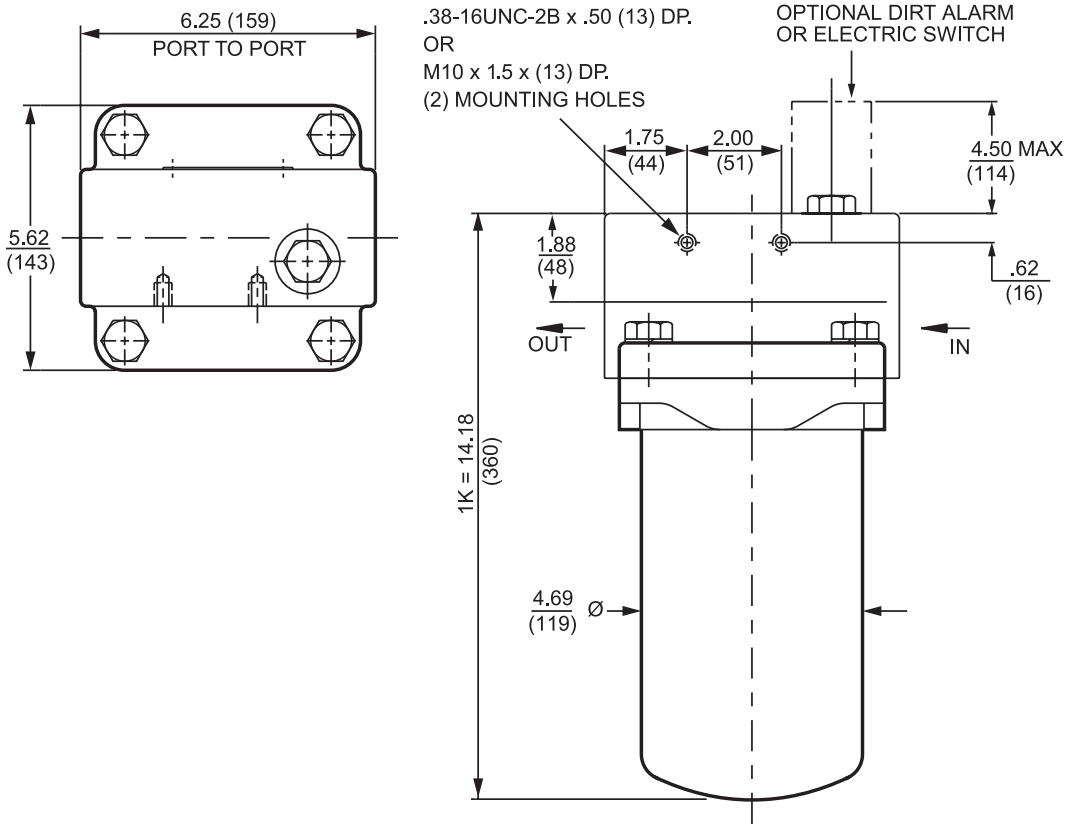

Metric dimensions in ( ).
Dimensions shown are inches (millimeters) for general information and overall envelope size only.
For complete dimensions please contact Schroeder Industries to request a certified print.

Element Performance Information & Dirt Holding Capacity

	Filtration Ratio Per ISO 4572/NFPA T3.10.8.8 Using automated particle counter (APC) calibrated per ISO 4402			Filtration Ratio per ISO 16889 Using APC calibrated per ISO 11171	
Element	$ß_x \geq 75$	$ß_x \geq 100$	$ß_x \geq 200$	$ß_x(c) \geq 200$	$ß_x(c) \geq 1000$
KZ1	<1.0	<1.0	<1.0	<4.0	4.2
KZ3	<1.0	<1.0	<2.0	<4.0	4.8
KZ5	2.5	3.0	4.0	4.8	6.3
KZ10	7.4	8.2	10.0	8.0	10.0
KZ25	18.0	20.0	22.5	19.0	24.0
KZW1	N/A	N/A	N/A	<4.0	<4.0
KZW3	N/A	N/A	N/A	4.0	4.8
KZW5	N/A	N/A	N/A	5.1	6.4
KZW10	N/A	N/A	N/A	6.9	8.6
KZW25	N/A	N/A	N/A	15.4	18.5

Element	DHC (gm)	Element	DHC (gm)	Element	DHC (gm)
KZ1	112	KZW1	61	KDZ1	89
KZ3/KAS3	115	KZW3	64	KDZ3	71
KZ5/KAS5	119	KZW5	63	KDZ5	100
KZ10/KAS10	108	KZW10	67	KDZ10	80
KZ25	93	KZW25	79	KDZ25	81

Element Collapse Rating: 150 psid (10 bar) for standard elements
Flow Direction: Outside In
Element Nominal Dimensions: 3.9" (99 mm) O.D. x 9.0" (230 mm) long

Pressure Drop Information

Based on Flow Rate and Viscosity

$\Delta P_{housing}$

KF5 $\Delta P_{housing}$ for fluids with sp gr (specific gravity) = 0.86:

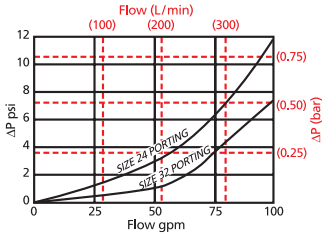

$\Delta P_{element}$

KZ

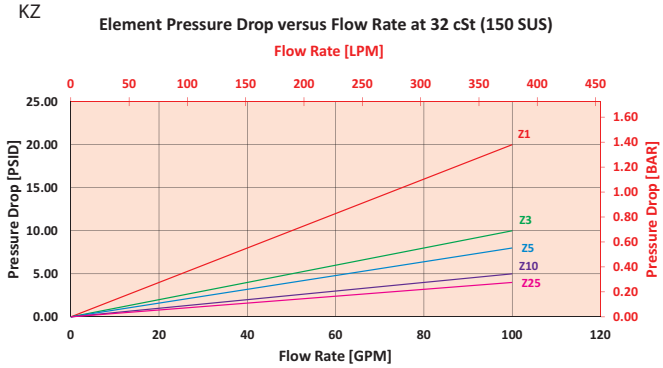

$$\Delta P_{filter} = \Delta P_{housing} + (\Delta P_{element} * V_f)$$

Exercise:

Determine ΔP_{filter} at 50 gpm (189.5 L/min) for KF51KZ10S24D5 using 200 SUS (42.6 cSt) fluid.

Use the housing pressure curve to determine $\Delta P_{housing}$ at 50 gpm. In this case, $\Delta P_{housing}$ is 3 psi (.21 bar) on the graph for the KF5 housing.

Use the element pressure curve to determine $\Delta P_{element}$ at 50 gpm. In this case, $\Delta P_{element}$ is 2 psi (.14 bar) according to the graph for the KZ10 element.

Because the viscosity in this sample is 200 SUS (42.6 cSt), we determine the Viscosity Factor (V_f) by dividing the Operating Fluid Viscosity with the Standard Viscosity of 150 SUS (32 cSt). To best determine your Operating Fluid Viscosity, please reference the chart in Appendix D.

Finally, the overall filter pressure differential, ΔP_{filter}, is calculated by adding $\Delta P_{housing}$ with the true element pressure differential, ($\Delta P_{element}$*V_f). The $\Delta P_{element}$ from the graph has to be multiplied by the viscosity factor to get the true pressure differential across the element.

Solution:

$\Delta P_{housing}$ = 3 psi [.21 bar] | $\Delta P_{element}$ = 2 psi [.14 bar]

V_f = 200 SUS (42.6 cSt) / 150 SUS (32 cSt) = 1.3

ΔP_{filter} = 3 psi + (2 psi * 1.3) = 5.6 psi

OR

ΔP_{filter} = .21 bar + (.14 bar * 1.3) = .40 bar

Note:
If your element is not graphed, use the following equation:
$\Delta P_{element}$ = Flow Rate x ΔP_f. Plug this variable into the overall pressure drop equation.

Ele.	ΔP
K3	0.25
K10	0.09
K25	0.02
KAS3	0.10
KAS5	0.08
KAS10	0.05
KDZ1	0.24
KDZ3	0.12
KDZ5	0.10
KDZ10	0.06
KDZ25	0.04
KZW1	0.43
KZW3	0.32
KZW5	0.28
KZW10	0.23
KZW25	0.14

Medium Pressure Filter

Filter Model Number Selection

How to Build a Valid Model Number for a Schroeder KF5:

BOX 1	BOX 2	BOX 3	BOX 4	BOX 5	BOX 6	BOX 7	BOX 8	BOX 9	BOX 10
KF5 –	–	–	–	–	–	–	–	–	–

Example: NOTE: One option per box

BOX 1	BOX 2	BOX 3	BOX 4	BOX 5	BOX 6	BOX 7	BOX 8	BOX 9	BOX 10	
KF5 –	1K –	Z –	10 –	–	–	P32 –	–	–	D5	= KF51KZ10P32D5

BOX 1 — Filter Series

- KF5
- KFN5 (Non-bypass: req. ZX/MXX hi-collapse elements)
- WKF5 (Water)
- WKFN5 (Water)
- GKF5 (GeoSeal)

BOX 2 — Number & Size of Elements

1 K

GeoSeal® Options

1 KG

BOX 3 — Media Type

- Omit = E media (Cellulose)
- AS = Anti-Static Pleated media
- Z = Excellement® Z-Media® (Synthetic)
- ZW = Aqua-Excellement® ZW media
- ZX = Excellement® Z-Media® (High Collapse Centertube)
- W = Water Removal media
- M = M media (Reusable Metal)
- MXX = M media (reusable metal mesh; high collapse centertube)
- DZ = DirtCatcher® Excellement® Z-Media®

BOX 4 — Micron Rating

- 1 = 1 µ (Z, ZW, ZX and DZ media)
- 3 = 3 µ (E, AS, Z, ZW, ZX and DZ media)
- 5 = 5 µ (AS, Z, ZW, ZX and DZ media)
- 10 = 10 µ (E, AS, Z, ZW,ZX, M and DZ media)
- 25 = 25 µ (E, Z, ZW, ZX, M, MXX and DZ media)
- 60 = 60 µ (M media)

BOX 5 — Seal Material

- Omit = Buna N
- H = EPR
- V = Viton®
- H.5 = Skydrol® Compatibility

BOX 6 — Magnetic Option

- Omit = None
- M = Magnet Inserts

BOX 7 — Porting Options

- P24 = 1½" NPTF
- P32 = 2" NPTF
- S24 = SAE-24
- S32 = SAE-32
- F24 = 1½" SAE split 4-bolt flange Code 61
- B24 = ISO 228 G-1½"

BOX 8 — Bypass

- Omit = 40 PSI Bypass
- 50 = 50 PSI Bypass

(Omit Box 8 if a Non-bypassing filter is used)

BOX 9 — Test Port Options

- Omit = None
- L = Two ¼" NPTF inlet and outlet female test ports

BOX 10 — Dirt Alarm® Options

	Omit = None
Visual	D = Pointer D5 = Visual pop-up
Visual with Thermal Lockout	D8 = Visual w/ thermal lockout
Electrical	MS5 = Electrical w/ 12 in. 18 gauge 4-conductor cable MS5LC = Low current MS5 MS10 = Electrical w/ DIN connector (male end only) MS10LC = Low current MS10 MS11 = Electrical w/ 12 ft. 4-conductor wire MS12 = Electrical w/ 5 pin Brad Harrison connector (male end only) MS12LC = Low current MS12 MS16 = Electrical w/ weather-packed sealed connector MS16LC = Low current MS16 MS17LC = Electrical w/ 4 pin Brad Harrison male connector
Electrical with Thermal Lockout	MS5T = MS5 (see above) w/ thermal lockout MS5LCT = Low current MS5T MS10T = MS10 (see above) w/ thermal lockout MS10LCT = Low current MS10T MS12T = MS12 (see above) w/ thermal lockout MS12LCT = Low current MS12T MS16T = MS16 (see above) w/ thermal lockout MS16LCT = Low current MS16T MS17LCT = Low current MS17T
Electrical Visual	MS = Cam operated switch w/ ½" conduit female connection MS13 = Supplied w/ threaded connector & light MS14 = Supplied w/ 5 pin Brad Harrison connector & light (male end)
Electrical Visual with Thermal Lockout	MS13DCT = MS13 (see above), direct current, w/ thermal lockout MS13DCLCT = Low current MS13DCT MS14DCT = MS14 (see above), direct current, w/ thermal lockout MS14DCLCT = Low current MS14DCT

NOTES:

Box 2. Replacement element part numbers are a combination of Boxes 2, 3, 4 and 5. Example: KZ10V
High collapse media only available with KFN5.

Box 5. For options H, V, and H.5, all aluminum parts are anodized.
H.5 seal designation includes the following: EPR seals, stainless steel wire mesh on elements, and light oil coating on housing exterior.
Viton® is a registered trademark of DuPont Dow Elastomers.
Skydrol® is a registered trademark of Solutia Inc.

Box 7. B porting supplied with metric mounting holes.

Medium Pressure Filter SRLT

Model No. of filter in photograph is SRLT6RZ10S12D5.

Features and Benefits

- Smaller, compact version of the RLT
- Quick and easy cartridge element changeouts
- Lightweight at 3 pounds
- Offered in pipe, SAE straight thread and ISO 228 porting
- Available with NPTF inlet and outlet female test ports
- Various Dirt Alarm® options
- Same day shipment model available

25 gpm
100 L/min
1400 psi
100 bar

Filter Housing Specifications

Flow Rating:	Up to 25 gpm (100 L/min) for 150 SUS (32 cSt) fluids
Max. Operating Pressure:	1400 psi (100 bar)
Min. Yield Pressure:	4000 psi (276 bar), per NFPA T2.6.1
Rated Fatigue Pressure:	750 psi (52 bar) per NFPA T2.6.1-R1-2005
Temp. Range:	-20°F to 225°F (-29°C to 107°C)
Bypass Setting:	Cracking: 40 psi (2.8 bar) Full Flow: 55 psi (3.8 bar)
Porting Head:	Aluminum
Element Case:	Aluminum
Weight of SRLT-6R: Weight of SRLT-12R:	3.0 lbs. (1.4 kg) 4.5 lbs. (2 kg)
Element Change Clearance:	2.75" (70 mm)

Fluid Compatibility

Type Fluid	Appropriate Schroeder Media
Petroleum Based Fluids	All E media (cellulose) and Z-Media® (synthetic)
High Water Content	All Z-Media® (synthetic)
Invert Emulsions	10 and 25 µ Z-Media® (synthetic)
Water Glycols	3, 5, 10 and 25 µ Z-Media® (synthetic)
Phosphate Esters	All Z-Media® (synthetic) with H (EPR) seal designation
Skydrol®	3, 5, 10 and 25 µ Z-Media® (synthetic) with H.5 seal designation (EPR seals and stainless steel wire mesh in element, and light oil coating on housing exterior)

Medium Pressure Filter

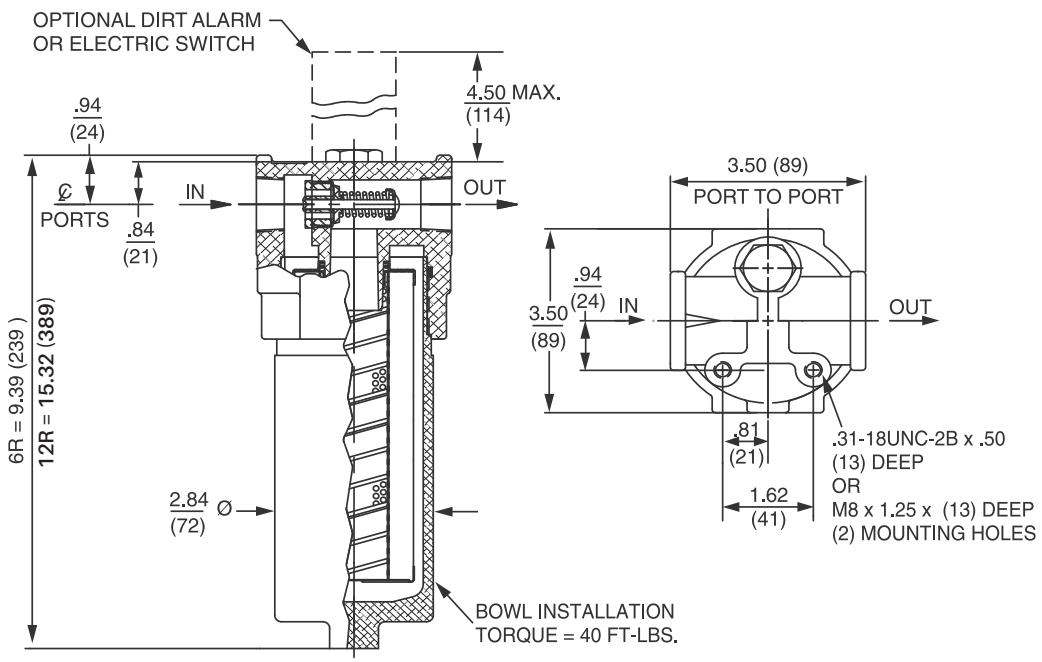

Metric dimensions in ( ).
Dimensions shown are inches (millimeters) for general information and overall envelope size only.
For complete dimensions please contact Schroeder Industries to request a certified print.

Element Performance Information & Dirt Holding Capacity

	Filtration Ratio Per ISO 4572/NFPA T3.10.8.8 Using automated particle counter (APC) calibrated per ISO 4402			Filtration Ratio per ISO 16889 Using APC calibrated per ISO 11171	
Element	$ß_x \geq 75$	$ß_x \geq 100$	$ß_x \geq 200$	$ß_x(c) \geq 200$	$ß_x(c) \geq 1000$
6RZ1	<1.0	<1.0	<1.0	<4.0	4.2
6RZ3	<1.0	<1.0	<2.0	<4.0	4.8
6RZ5	2.5	3.0	4.0	4.8	6.3
6RZ10	7.4	8.2	10.0	8.0	10.0
6RZ25	18.0	20.0	22.5	19.0	24.0

Element	DHC (gm)	Element	DHC (gm)
6RZ1	15	12RZ1	30
6RZ3	15	12RZ3	30
6RZ5	17	12RZ5	34
6RZ10	14	12RZ10	28
6RZ25	25	12RZ25	50

Element Collapse Rating: 150 psid (10 bar)
Flow Direction: Outside In
Element Nominal Dimensions: 2.0" (50 mm) O.D. x 6.0" (150 mm) long

Pressure Drop Information

Based on Flow Rate and Viscosity

$\Delta P_{housing}$

SRLT $\Delta P_{housing}$ for fluids with sp gr (specific gravity) = 0.86:

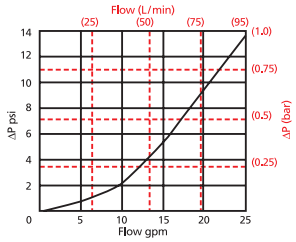

$\Delta P_{element}$

6RZ

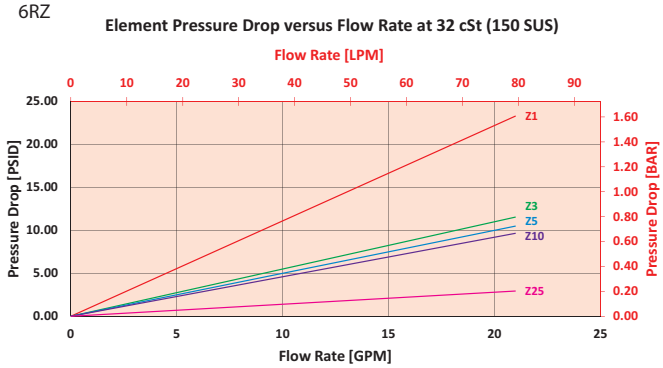

12RZ

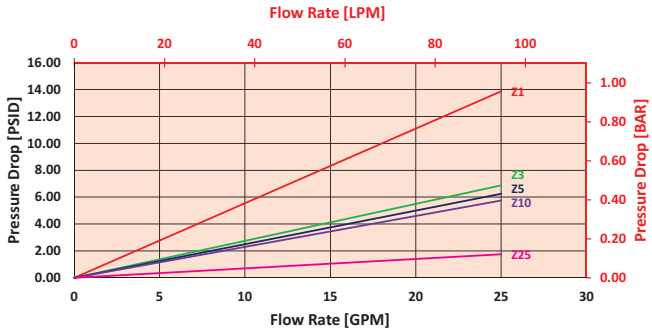

$$\Delta P_{filter} = \Delta P_{housing} + (\Delta P_{element} * V_f)$$

Exercise:

Determine ΔP_{filter} at 15 gpm (57 L/min) for SRLT6RZ10S12D5 using 100 SUS (21.3 cSt) fluid.

Use the housing pressure curve to determine $\Delta P_{housing}$ at 15 gpm. In this case, $\Delta P_{housing}$ is 5 psi (.34 bar) on the graph for the SRLT housing.

Use the element pressure curve to determine $\Delta P_{element}$ at 15 gpm. In this case, $\Delta P_{element}$ is 7 psi (.48 bar) according to the graph for the 6RZ10 element.

Because the viscosity in this sample is 100 SUS (21.3 cSt), we determine the Viscosity Factor (V_f) by dividing the Operating Fluid Viscosity with the Standard Viscosity of 150 SUS (32 cSt). To best determine your Operating Fluid Viscosity, please reference the chart in Appendix D.

Finally, the overall filter pressure differential, ΔP_{filter}, is calculated by adding $\Delta P_{housing}$ with the true element pressure differential, ($\Delta P_{element}$*V_f). The $\Delta P_{element}$ from the graph has to be multiplied by the viscosity factor to get the true pressure differential across the element.

Solution:

$\Delta P_{housing}$ = 5 psi [.34 bar] | $\Delta P_{element}$ = 7 psi [.48 bar]

V_f = 100 SUS (21.3 cSt) / 150 SUS (32 cSt) = .67

ΔP_{filter} = 5 psi + (7 psi * .67) = 9.7 psi

OR

ΔP_{filter} = .34 bar + (.48 bar * .67) = .66 bar

Note:
If your element is not graphed, use the following equation:
$\Delta P_{element}$ = Flow Rate x ΔP_f. Plug this variable into the overall pressure drop equation.

Ele.	ΔP
6R3	0.45
6R10	0.38

SRLT Medium Pressure Filter

Filter Model Number Selection

Highlighted product eligible for QuickDelivery

How to Build a Valid Model Number for a Schroeder SRLT:

BOX 1	BOX 2	BOX 3	BOX 4	BOX 5	BOX 6	BOX 7	BOX 8
SRLT –	–	–	–	–	–	–	–

Example: NOTE: One option per box

BOX 1	BOX 2	BOX 3	BOX 4	BOX 5	BOX 6	BOX 7	BOX 8	
SRLT –	6 –	RZ10 –	–	S12 –	–	–	D5	= SRLT6RZ10S12D5

BOX 1

Filter Series
SRLT (requires RZ elements only)
SRLTN (Non-bypassing requires R5Z elements only)

BOX 2

Length of Element (in)
6
12

BOX 3

Element Size and Media
RZ1 = R size 1 µ Excellement® Z-Media® (synthetic)
RZ3 = R size 3 µ Excellement® Z-Media® (synthetic)
RZ5 = R size 5 µ Excellement® Z-Media® (synthetic)
RZ10 = R size 10 µ Excellement® Z-Media® (synthetic)
RZ25 = R size 25 µ Excellement® Z-Media® (synthetic)
RW = R size W media (water removal)
R5Z1 = R size 1 µ Excellement® Z-Media® 500 psid collapse
R5Z3 = R size 3 µ Excellement® Z-Media® 500 psid collapse
R5Z5 = R size 5 µ Excellement® Z-Media® 500 psid collapse
R5Z10 = R size 10 µ Excellement® Z-Media® 500 psid collapse
R5Z25 = R size 25 µ Excellement® Z-Media® 500 psid collapse

BOX 4

Seal Material
Omit = Buna N
H = EPR
V = Viton®
H.5 = Skydrol® Compatibility

BOX 5

Porting
P12= ¾" NPTF
S12= SAE-12
B12 = ISO 228 G-¾"

BOX 6

Bypass
Omit = 40 psi bypass setting
30 = 30 psi bypass setting
50 = 50 psi bypass setting
60 = 60 psi bypass setting

BOX 7

Test Points
Omit = None
L = Two ⅛" NPTF inlet and outlet female test ports

BOX 8

Dirt Alarm® Options		
	Omit	= None
Visual	D5	= Visual pop-up
Visual with Thermal Lockout	D8	= Visual w/ thermal lockout
Electrical	MS5	= Electrical w/ 12 in. 18 gauge 4-conductor cable
	MS5LC	= Low current MS5
	MS10	= Electrical w/ DIN connector (male end only)
	MS10LC	= Low current MS10
	MS11	= Electrical w/ 12 ft. 4-conductor wire
	MS12	= Electrical w/ 5 pin Brad Harrison connector (male end only)
	MS12LC	= Low current MS12
	MS16	= Electrical w/ weather packed sealed connector
	MS16LC	= Low current MS16
	MS17LC	= Electrical w/ 4 pin Brad Harrison male connector
Electrical with Thermal Lockout	MS5T	= MS5 (see above) w/ thermal lockout
	MS5LCT	= Low current MS5T
	MS10T	= MS10 (see above) w/ thermal lockout
	MS10LCT	= Low current MS10T
	MS12T	= MS12 (see above) w/ thermal lockout
	MS12LCT	= Low current MS12T
	MS16T	= MS16 (see above) w/ thermal lockout
	MS16LCT	= Low current MS16T
Electrical Visual	MS17LCT	= Low current MS17T
	MS13	= Supplied w/ threaded connector & light
	MS14	= Supplied w/ 5 pin Brad Harrison connector & light (male end)
Electrical Visual with Thermal Lockout	MS13DCT	= MS13 (see above), direct current, w/ thermal lockout
	MS13DCLCT	= Low current MS13DCT
	MS14DCT	= MS14 (see above), direct current,w/ thermal lockout
	MS14DCLCT	= Low current MS14DCT

NOTES:

Box 2. Replacement element part numbers are a combination of Boxes 2, 3, and 4. Example: 6R3V

Box 3. E media elements are only available with Buna N seals.

Box 4. For options H, V, and H.5, all aluminum parts are anodized. H.5 seal designation includes the following: EPR seals, stainless steel wire mesh on elements, and light oil coating on housing exterior. Viton® is a registered trademark of DuPont Dow Elastomers. Skydrol® is a registered trademark of Solutia Inc.

Box 5. B porting option supplied with metric mounting holes.

Medium Pressure Filter K9

Model No. of filter in photograph is K91KZ5BP20NP20ND5C.

Features and Benefits (K9)

- Extremely versatile multiple inlet and outlet ports; can be used alone or in series with another K9
- Top loading for easy access for element change-out
- Allows consolidation of inventoried replacement elements by using K-size elements
- Multiple inlet and outlet porting options reduce the need for additional adaptors on installation
- Can be fitted with test ports for oil sampling
- Small profile allows filter to be mounted in tight areas
- Various Dirt Alarm® options
- Meets HF4 automotive standard

Part of Schroeder Industries Energy Savings Initiative

100 gpm
380 L/min
900 psi
60 bar

Filter Housing Specifications

Flow Rating:	Up to 100 gpm (380 L/min) for 150 SUS (32 cSt) fluids
Max. Operating Pressure:	900 psi (60 bar)
Min. Yield Pressure:	3200 psi (220 bar), per NFPA T2.6.1
Rated Fatigue Pressure:	750 psi (52 bar) per NFPA T2.6.1-R1-2005
Temp. Range:	-20°F to 225°F (-29°C to 107°C)
Bypass Setting:	Cracking: 40 psi (2.8 bar) Full Flow: 80 psi (5.5 bar)
Porting Head & Cap:	Cast Aluminum
Element Case:	Steel
Weight of K9-1K:	19 lbs. (8.6 kg)
Weight of K9-2K:	30 lbs. (13.6 kg)
Weight of K9-3K:	41 lbs. (18.6 kg)
Element Change Clearance:	8.50" (215 mm) for 1K; 17.50" (445 mm) for KK; 26.5" (673 mm) for 27K

Fluid Compatibility

Type Fluid	Appropriate Schroeder Media
Petroleum Based Fluids	All E media (cellulose), Z-Media® and ASP® media (synthetic)
High Water Content	All Z-Media® (synthetic), 3, 5 and 10 µ ASP® media (synthetic)
Invert Emulsions	10 and 25 µ Z-Media® (synthetic), 10 µ ASP® media (synthetic)
Water Glycols	3, 5, 10 and 25 µ Z-Media® (synthetic), 3, 5 and 10 µ ASP® media (synthetic)
Phosphate Esters	All Z-Media® (synthetic) with H (EPR) seal designation and 3 and 10 µ E media (cellulose) with H (EPR) seal designation, 3, 5 and 10 µ ASP® media (synthetic)
Skydrol®	3, 5, 10 and 25 µ Z-Media® (synthetic) with H.5 seal designation (EPR seals and stainless steel wire mesh in element, and light oil coating on housing exterior), 3, 5 and 10 µ ASP® Media (synthetic)

K9 Medium Pressure Filter

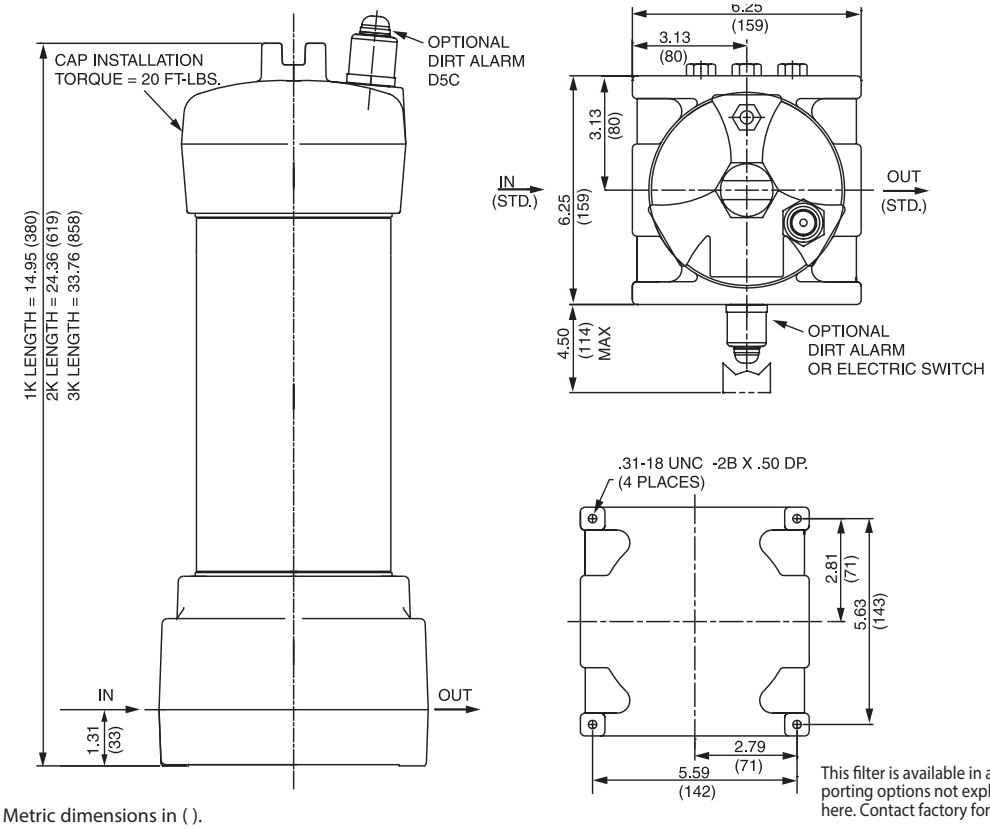

This filter is available in additional porting options not explicitly shown here. Contact factory for details.

Metric dimensions in ( ).
Dimensions shown are inches (millimeters) for general information and overall envelope size only.
For complete dimensions please contact Schroeder Industries to request a certified print.

Element Performance Information & Dirt Holding Capacity

Element	Filtration Ratio Per ISO 4572/NFPA T3.10.8.8 Using automated particle counter (APC) calibrated per ISO 4402			Filtration Ratio per ISO 16889 Using APC calibrated per ISO 11171	
	$ß_x \geq 75$	$ß_x \geq 100$	$ß_x \geq 200$	$ß_x(c) \geq 200$	$ß_x(c) \geq 1000$
KZ1/KKZ1/27KZ1	<1.0	<1.0	<1.0	<4.0	4.2
KZ3/KAS3/KKZ3	<1.0	<1.0	<2.0	<4.0	4.8
KZ5/KAS5/KKZ5	2.5	3.0	4.0	4.8	6.3
KZ10/KAS10/KKZ10	7.4	8.2	10.0	8.0	10.0
KZ25/KKZ25/27KZ25	18.0	20.0	22.5	19.0	24.0
KZW1	N/A	N/A	N/A	<4.0	<4.0
KZW3/KKZW3	N/A	N/A	N/A	4.0	4.8
KZW5/KKZW5	N/A	N/A	N/A	5.1	6.4
KZW10/KKZW10	N/A	N/A	N/A	6.9	8.6
KZW25/KKZW25	N/A	N/A	N/A	15.4	18.5

Dirt Holding Capacity

Element	DHC (gm)	Element	DHC (gm)	Element	DHC (gm)	Element	DHC (gm)	Element	DHC (gm)
KZ1	112	KKZ1	224	27KZ1	336	KZW1	61		
KZ3	115	KKZ3	230	27KZ3	345	KZW3	64	KKZW3	128
KZ5	119	KKZ5	238	27KZ5	357	KZW5	63	KKZW5	126
KZ10	108	KKZ10	216	27KZ10	324	KZW10	57	KKZW10	114
KZ25	93	KKZ25	186	27KZ25	279	KZW25	79	KKZW25	158

Element Collapse Rating: 150 psid (10 bar) for standard elements

Flow Direction: Outside In

Element Nominal Dimensions:
K: 3.9" (99 mm) O.D. x 9.0" (230 mm) long
KK: 3.9" (99 mm) O.D. x 18.0" (460 mm) long
27K: 3.9" (99 mm) O.D. x 27.0" (690 mm) long

Pressure Drop Information

Based on Flow Rate and Viscosity

$\Delta P_{housing}$

K9 $\Delta P_{housing}$ for fluids with sp gr (specific gravity) = 0.86:

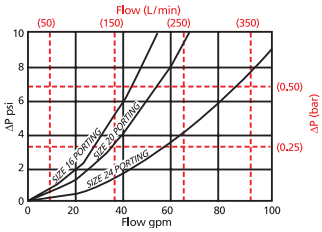

$\Delta P_{element}$

KZ

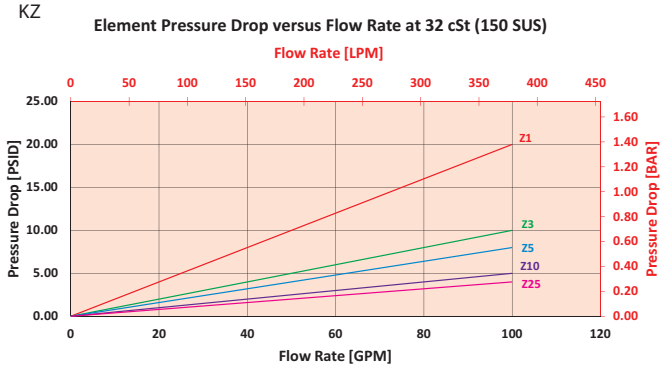

2KZ/KKZ

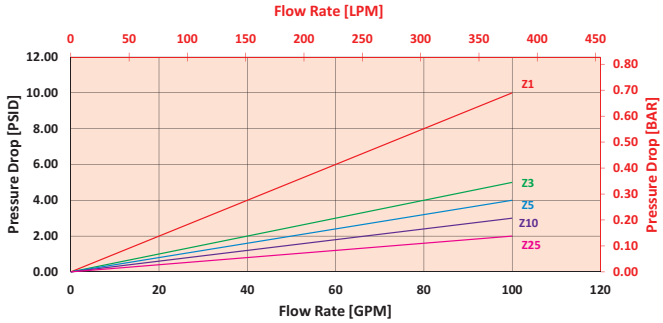

$$\Delta P_{filter} = \Delta P_{housing} + (\Delta P_{element} * V_f)$$

Exercise:

Determine ΔP_{filter} at 50 gpm (189.5 L/min) for K91KZ10BP16NP16ND5 using 160 SUS (34 cSt) fluid.

Use the housing pressure curve to determine $\Delta P_{housing}$ at 50 gpm. In this case, $\Delta P_{housing}$ is 8 psi (.55 bar) on the graph for the K9 housing.

Use the element pressure curve to determine $\Delta P_{element}$ at 50 gpm. In this case, $\Delta P_{element}$ is 2 psi (.14 bar) according to the graph for the KZ10 element.

Because the viscosity in this sample is 160 SUS (34 cSt), we determine the Viscosity Factor (V_f) by dividing the Operating Fluid Viscosity with the Standard Viscosity of 150 SUS (32 cSt). To best determine your Operating Fluid Viscosity, please reference the chart in Appendix D.

Finally, the overall filter pressure differential, ΔP_{filter}, is calculated by adding $\Delta P_{housing}$ with the true element pressure differential, ($\Delta P_{element}$*V_f). The $\Delta P_{element}$ from the graph has to be multiplied by the viscosity factor to get the true pressure differential across the element.

Solution:

$\Delta P_{housing}$ = 8 psi [.55 bar] | $\Delta P_{element}$ = 2 psi [.14 bar]

V_f = 160 SUS (34 cSt) / 150 SUS (32 cSt) = 1.1

ΔP_{filter} = 8 psi + (2 psi * 1.1) = 10.2 psi

OR

ΔP_{filter} = .55 bar + (.14 bar * 1.1) = .70 bar

Note:
If your element is not graphed, use the following equation:
$\Delta P_{element}$ = Flow Rate x ΔP_f. Plug this variable into the overall pressure drop equation.

Ele.	ΔP	Ele.	ΔP	Ele.	ΔP
K3	0.25	2K3/ KK3	0.12	3KZ1/ 27KZ1	0.05
K10	0.09	2K10/ KK10	0.05	3KZ3/ 27KZ3	0.03
K25	0.02	2K25/ KK25	0.01	3KZ5/ 27KZ5	0.02
KAS3	0.10	2KAS3/ KKAS3	0.05	3KZ10/ 27KZ10	0.02
KAS5	0.08	2KAS5/ KKAS5	0.04	3KZ25/ 27KZ25	0.01
KAS10	0.05	2KAS10/ KKAS10	0.03	3K3	0.08
KZX10	0.22	2KZX10/ KKZX10	0.11	3K10	0.03
KZW1	0.43	2KZW1	-	3K25	0.01
KZW3	0.32	2KZW3/ KKZW3	0.16	3KAS3/ 27KAS3	0.03
KZW5	0.28	2KZW5/ KKZW5	0.14	3KAS5/ 27KAS5	0.02
KZW10	0.23	2KZW10/ KKZW10	0.12	3KAS10/ 27KAS10	0.02
KZW25	0.14	2KZW25/ KKZW25	0.07	3KZX10/ 27KZX10	0.07

K9 Medium Pressure Filter

Filter Model Number Selection

How to Build a Valid Model Number for a Schroeder K9:

BOX 1	BOX 2	BOX 3	BOX 4	BOX 5	BOX 6	BOX 7	BOX 8	BOX 9
K9								

Example: NOTE: One option per box

BOX 1	BOX 2	BOX 3	BOX 4	BOX 5	BOX 6	BOX 7	BOX 8	BOX 9	
K9	1K	Z	10	B	P16 N P16 N			D5	= K91KZ10BP16NP16ND5

BOX 1 — Filter Series

K9

BOX 2 — Number & Size of Elements

1 K,KK,27K

2 K

3 K

Porting Options

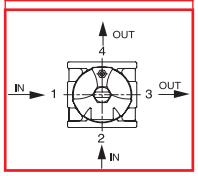

BOX 3 — Media Type

Omit = E-media (cellulose)

Z = Excellement® Z-Media®

AS = Anti-Stat Pleat media (synthetic)

ZW = Aqua-Excellement® ZW media

ZX = Excellement® Z-Media® (high collapse centertube)

W = W media (water removal)

M = media (reusable metal mesh)

BOX 4 — Micron Rating

1 = 1 µ Z, ZW, ZX media

3 = 3 µ AS, E, Z, ZW, ZX media

5 = 5 µ AS, Z, ZW, ZX media

10 = 10 µ AS, E, M, Z, ZW, ZX media

25 = 25 µ E, M, Z, ZW, ZX media

60 = 60 µ M media

150 = 150 µ M media

260 = 260 µ M media

BOX 5 — Seal Material

B = Buna N

V = Viton®

H = EPR

H.5 = Skydrol® Compatibility

BOX 6 — Porting (Specification of all 4 ports is required)

Port 1 (standard)	Port 2	Port 3	Port 4
N = None	N = None	N = None	N = None
P16 = 1" NPTF P20 = 1¼" NPTF P24 = 1½" NPTF	P16 = 1" NPTF P20 = 1¼" NPTF P24 = 1½" NPTF	P16 = 1" NPTF P20 = 1¼" NPTF P24 = 1½" NPTF	P16 = 1" NPTF P20 = 1¼" NPTF P24 = 1½" NPTF
S16 = SAE-16 S20 = SAE-20 S24 = SAE-24	F16 = 1" SAE 4-bolt flange Code 61 F20 = 1¼" SAE 4-bolt flange Code 61 F24 = 1½" SAE 4-bolt flange Code 61	S16 = SAE-16 S20 = SAE-20 S24 = SAE-24	F16 = 1" SAE 4-bolt flange Code 61 F20 = 1¼" SAE 4-bolt flange Code 61 F24 = 1½" SAE 4-bolt flange Code 61
B16 = ISO 228 G-1" B20 = ISO 228 G-1¼" B24 = ISO 228 G-1½"	S16 = SAE-16 S20 = SAE-20 S24 = SAE-24	B16 = ISO 228 G-1" B20 = ISO 228 G-1¼" B24 = ISO 228 G-1½"	S16 = SAE-16 S20 = SAE-20 S24 = SAE-24
	B16 = ISO 228 G-1" B20 = ISO 228 G-1¼" B24 = ISO 228 G-1½"		B16 = ISO 228 G-1" B20 = ISO 228 G-1¼" B24 = ISO 228 G-1½"

BOX 7 — Bypass

Omit = 40 PSI Bypass

X = Blocked bypass

10 = 10 psi bypass setting

20 = 20 psi bypass setting

25 = 25 psi bypass setting

30 = 30 psi bypass setting

60 = 60 psi bypass setting

BOX 8 — Test Points

Omit = None

U = Test point in cap (upstream)

UU = Test points in block (upstream and downstream)

BOX 9 — Dirt Alarm® Options

	Omit = None
Visual	D5 = Visual pop-up D5C = D5 in cap
Visual with Thermal Lockout	D8 = Visual w/ thermal lockout D8C = D8 in cap
Electrical	MS5 = Electrical w/ 12 in. 18 gauge 4-conductor cable MS5LC = Low current MS5 MS10 = Electrical w/ DIN connector (male end only) MS10LC = Low current MS10 MS11 = Electrical w/ 12 ft. 4-conductor wire MS12 = Electrical w/ 5 pin Brad Harrison connector (male end only) MS12LC = Low current MS12 MS16 = Electrical w/ weather-packed sealed connector MS16LC = Low current MS16 MS17LC = Electrical w/ 4 pin Brad Harrison male connector
Electrical with Thermal Lockout	MS5T = MS5 (see above) w/ thermal lockout MS5LCT = Low current MS5T MS10T = MS10 (see above) w/ thermal lockout MS10LCT = Low current MS10T MS12T = MS12 (see above) w/ thermal lockout MS12LCT = Low current MS12T MS16T = MS16 (see above) w/ thermal lockout MS16LCT = Low current MS16T MS17LCT = Low current MS17T
Electrical Visual	MS13 = Supplied w/ threaded connector & light MS14 = Supplied w/ 5 pin Brad Harrison connector & light (male end)
Electrical Visual with Thermal Lockout	MS13DCT = MS13 (see above), direct current, w/ thermal lockout MS13DCLCT = Low current MS13DCT MS14DCT = MS14 (see above), direct current, w/ thermal lockout MS14DCLCT = Low current MS14DCT

NOTES:

Box 2. Double and triple stacking of K-size elements can be replaced by KK and 27K elements, respectively. Number of elements must equal 1 when using KK or 27K elements. Replacement element part numbers are identical to contents of Boxes 2, 3, 4, and 5.

Box 5. For options H, V, and H.5, all aluminum parts are anodized.
H.5 seal designation includes the following: EPR seals, stainless steel wire mesh on elements, and light oil coating on housing exterior.
Viton® is a registered trademark of DuPont Dow Elastomers.
Skydrol® is a registered trademark of Solutia Inc.

Box 7. When X is paired with a standard filter series, a standard bushing and spring plate will be used.

Box 9. If location 1 is used as inlet port, dirt alarm will occupy location 2. If location 2 is used as inlet port, dirt alarm will occupy location 1. If dual inlet ports are specified, the only dirt alarm option is pop-up indicator in cap (D5C).

Features and Benefits

- Two or three patented-pending K9 filters supplied in series as a single filter assembly providing in-line single pass particulate and water filtration
- Meets HF4 automotive standard
- 900 psi rating covers almost all transfer line pressure specs including air driven transfer systems
- Top loading for easy access for element change out
- Allows consolidation of inventoried elements by using K-size elements
- Can be fitted with test points for oil sampling

100 gpm
380 L/min
900 psi
60 bar

Model No. of filters in photograph are 3K9127EDBBP20P20UUD5C and Custom 2K9.

Filter Housing Specifications

Flow Rating:	Up to 100 gpm (380 L/min) for 150 SUS (32 cSt) fluids
Max. Operating Pressure:	900 psi (60 bar)
Min. Yield Pressure:	3200 psi (220 bar), per NFPA T2.6.1
Rated Fatigue Pressure:	750 psi (52 bar) per NFPA T2.6.1-R1-2005
Temp. Range:	-20°F to 225°F (-29°C to 107°C)
Bypass Setting:	Cracking: 40 psi (2.8 bar) each filter housing
Porting Base & Cap:	Cast Aluminum
Element Case:	Steel
Element Change Clearance:	8.50" (215 mm) for 1K; 17.5" (445 mm) for KK; 26.5" (673 mm) for 27K

Fluid Compatibility

Type Fluid	Appropriate Schroeder Media
Petroleum Based Fluids	All Z-Media® and ASP® media (synthetic)
High Water Content	All Z-Media® and ASP® media (synthetic)
Invert Emulsions	10 and 25 µ Z-Media® and 10 µ ASP® media (synthetic)
Water Glycols	3, 5, 10 and 25 µ Z-Media®, 3, 5 and 10 µ ASP® media (synthetic)
Phosphate Esters	All Z-Media® (synthetic) with H (EPR) seal designation and 3 and 10 µ E media (cellulose) with H (EPR) seal designation
Skydrol®	3, 5, 10 and 25 µ Z-Media® (synthetic) with H.5 seal designation (EPR seals and stainless steel wire mesh in element, and light oil coating on housing exterior), 3, 5 and 10 µ ASP® Media (synthetic)

2K9/3K9 Single Pass Filter Kit

2K9

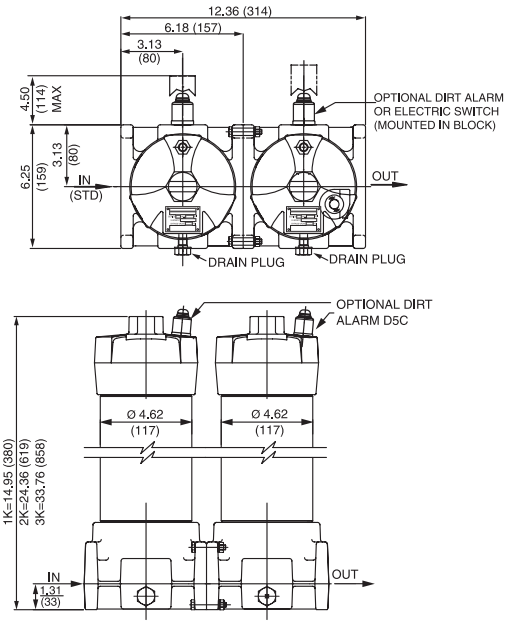

3K9

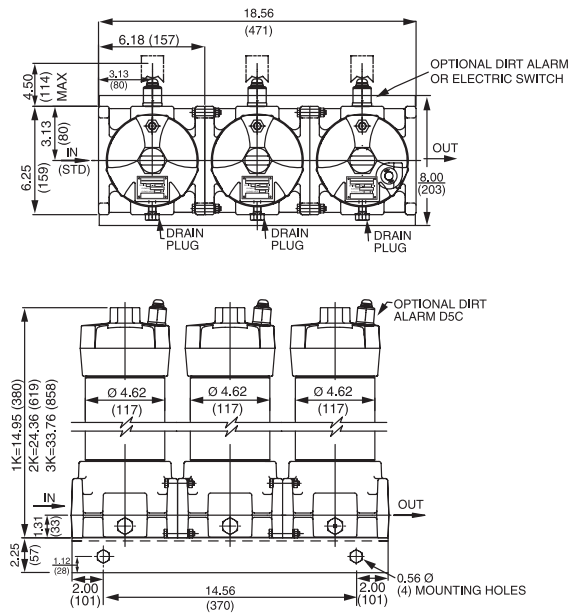

Metric dimensions in ( ).
Dimensions shown are inches (millimeters) for general information and overall envelope size only.
For complete dimensions please contact Schroeder Industries to request a certified print.

Element Performance Information & Dirt Holding Capacity

Element	Filtration Ratio Per ISO 4572/NFPA T3.10.8.8 Using automated particle counter (APC) calibrated per ISO 4402			Filtration Ratio per ISO 16889 Using APC calibrated per ISO 11171	
	$ß_x \geq 75$	$ß_x \geq 100$	$ß_x \geq 200$	$ß_x(c) \geq 200$	$ß_x(c) \geq 1000$
KZ1/KKZ1/27KZ1	<1.0	<1.0	<1.0	<4.0	4.2
KZ3/KKZ3/27KZ3	<1.0	<1.0	<2.0	<4.0	4.8
KZ5/KKZ5/27KZ5	2.5	3.0	4.0	4.8	6.3
KZ10/KKZ10/27KZ10	7.4	8.2	10.0	8.0	10.0
KZ25/KKZ25/27KZ25	18.0	20.0	22.5	19.0	24.0
KZW1	N/A	N/A	N/A	<4.0	<4.0
KZW3/KKZW3	N/A	N/A	N/A	4.0	4.8
KZW5/KKZW5	N/A	N/A	N/A	5.1	6.4
KZW10/KKZW10	N/A	N/A	N/A	6.9	8.6
KZW25/KKZW25	N/A	N/A	N/A	15.4	18.5

Element	DHC (gm)	Element	DHC (gm)	Element	DHC (gm)	Element	DHC (gm)	Element	DHC (gm)
KZ1	112	KKZ1	224	27KZ1	336	KZW1	61		
KZ3	115	KKZ3/	230	27KZ3	345	KZW3	64	KKZW3	128
KZ5	119	KKZ5	238	27KZ5	357	KZW5	63	KKZW5	126
KZ10	108	KKZ10	216	27KZ10	324	KZW10	57	KKZW10	114
KZ25	93	KKZ25	186	27KZ25	279	KZW25	79	KKZW25	158

Element Collapse Rating: 150 psid (10 bar) for standard elements

Flow Direction: Outside In

Element Nominal Dimensions:
K: 3.9" (99 mm) O.D. x 9.0" (230 mm) long
KK: 3.9" (99 mm) O.D. x 18.0" (460 mm) long
27K: 3.9" (99 mm) O.D. x 27.0" (690 mm) long

Pressure Drop Information

Based on Flow Rate and Viscosity

$\Delta P_{housing}$

2K9/3K9 $\Delta P_{housing}$ for fluids with sp gr (specific gravity) = 0.86:

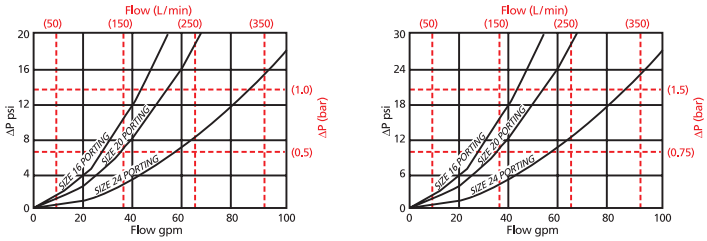

$\Delta P_{element}$

KZ

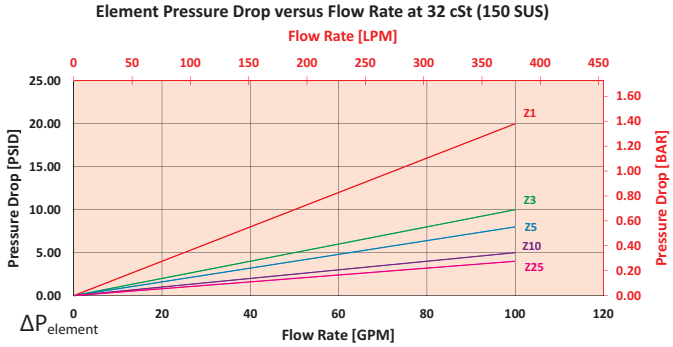

$\Delta P_{element}$

2KZ

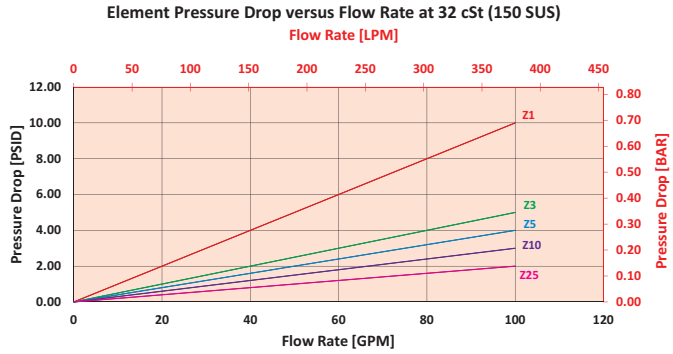

$$\Delta P_{filter} = \Delta P_{housing} + (\Delta P_{element} * V_f)$$

Exercise:

Determine ΔP_{filter} at 50 gpm (189.5 L/min) for 2K9109DBBP16P16D5 using 160 SUS (34 cSt) fluid.

Use the housing pressure curve to determine $\Delta P_{housing}$ at 50 gpm. In this case, $\Delta P_{housing}$ is 16 psi (1.1 bar) on the graph for the 2K9 housing.

Use the element pressure curve to determine $\Delta P_{element}$ at 50 gpm for the first element. In this case, $\Delta P_{element}$ is 2 psi (.14 bar) according to the graph for the KZ10 element.

Use the element pressure curve to determine $\Delta P_{element^2}$ at 50 gpm for the first element. In this case, $\Delta P_{element}$ is 5 psi (.34 bar) according to the graph for the KZ3 element.

Because the viscosity in this sample is 160 SUS (34 cSt), we determine the Viscosity Factor (V_f) by dividing the Operating Fluid Viscosity with the Standard Viscosity of 150 SUS (32 cSt). To best determine your Operating Fluid Viscosity, please reference the chart in Appendix D.

Finally, the overall filter pressure differential, ΔP_{filter}, is calculated by adding $\Delta P_{housing}$ with the true element pressure differential, ($\Delta P_{element}$*V_f). The $\Delta P_{element}$ from the graph has to be multiplied by the viscosity factor to get the true pressure differential across the element.

Solution:

$\Delta P_{housing}$ = 16 psi [1.1 bar] | $\Delta P_{element^1}$ = 2 psi [.14 bar] | $\Delta P_{element^2}$ = 5 psi [.34 bar]

V_f = 160 SUS (34 cSt) / 150 SUS (32 cSt) = 1.1

ΔP_{filter} = 16 psi + (2 psi * 1.1) + (5 psi * 1.1) = 23.7 psi

OR

ΔP_{filter} = 1.1 bar + (.14 bar * 1.1) + (.34 * 1.1) = 1.6 bar

Note:
If your element is not graphed, use the following equation:
$\Delta P_{element}$ = Flow Rate x ΔP_f. Plug this variable into the overall pressure drop equation.

Ele.	ΔP	Ele.	ΔP	Ele.	ΔP
K3	0.25	2K3/ KK3	0.12	3KZ1/ 27KZ1	0.05
K10	0.09	2K10/ KK10	0.05	3KZ3/ 27KZ3	0.03
K25	0.02	2K25/ KK25	0.01	3KZ5/ 27KZ5	0.02
KAS3	0.10	2KAS3/ KKAS3	0.05	3KZ10/ 27KZ10	0.02
KAS5	0.08	2KAS5/ KKAS5	0.04	3KZ25/ 27KZ25	0.01
KAS10	0.05	2KAS10/ KKAS10	0.03	3K3	0.08
KZX10	0.22	2KZX10/ KKZX10	0.11	3K10	0.03
KZW1	0.43	2KZW1	-	3K25	0.01
KZW3	0.32	2KZW3/ KKZW3	0.16	3KAS3/ 27KAS3	0.03
KZW5	0.28	2KZW5/ KKZW5	0.14	3KAS5/ 27KAS5	0.02
KZW10	0.23	2KZW10/ KKZW10	0.12	3KAS10/ 27KAS10	0.02
KZW25	0.14	2KZW25/ KKZW25	0.07	3KZX10/ 27KZX10	0.07

2K9/3K9 Single Pass Filter Kit

Filter Model Number Selection

How to Build a Valid Model Number for a Schroeder 2K9:

BOX 1	BOX 2	BOX 3	BOX 4	BOX 5	BOX 6	BOX 7	BOX 8	BOX 9	BOX 10	BOX 11	BOX 12
2K9 –	–	–	–	–	–	–	–	–	–	–	

Example: NOTE: One option per box

BOX 1	BOX 2	BOX 3	BOX 4	BOX 5	BOX 6	BOX 7	BOX 8	BOX 9	BOX 10	BOX 11	BOX 12	
2K9 –	1 –	09 –	D –	B –	B –	B –	P16 –	P16 –	–	D5 –	–	= 2K9109DBBBP16P16D5

BOX 1 — Filter

Filter
2K9
3K9

BOX 2 — Number of Elements

Number of Elements
1
2
3

BOX 3 — Length of Elements

Length of Elements
09 = K-Size Element
18 = KK Size Element
27 = 27K Size Element

BOX 4 — First Housing Element Micron Rating

First Housing Element Micron Rating
A = 1 µ Z-Media®
B = 3 µ Z-Media®
C = 5 µ Z-Media®
D = 10 µ Z-Media®
E = 25 µ Z-Media®
F = W Water Removal
G = 1 µ ZW-media
H = 3 µ ZW-media
J = 5 µ ZW-media
K = 10 µ ZW-media
L = 25 µ ZW-media
M = 3 µ AS-media
N = 5 µ AS-media
O = 10 µ AS-media

BOX 5 — Second Housing Element Micron Rating

Second Housing Element Micron Rating
A = 1 µ Z-Media®
B = 3 µ Z-Media®
C = 5 µ Z-Media®
D = 10 µ Z-Media®
E = 25 µ Z-Media®
F = W Water Removal
G = 1 µ ZW-media
H = 3 µ ZW-media
J = 5 µ ZW-media
K = 10 µ ZW-media
L = 25 µ ZW-media
M = 3 µ AS-media
N = 5 µ AS-media
O = 10 µ AS-media

BOX 6 — Third Housing

Third Housing	
A	= 1 µ Z-Media®
B	= 3 µ Z-Media®
C	= 5 µ Z-Media®
D	= 10 µ Z-Media®
E	= 25 µ Z-Media®
F	= W media (water removal)
G	= 1 µ ZW-media
H	= 3 µ ZW-media
J	= 5 µ ZW-media
K	= 10 µ ZW-media
L	= 25 µ ZW-media
M	= 3 µ AS-media
N	= 5 µ AS-media
O	= 10 µ AS-media

BOX 7 — Seal Material

Seal Material	
B	= Buna N
V	= Viton®
H	= EPR
H.5	= Skydrol® Compatible

BOX 8 — "In" Porting

"In" Porting
P16 = 1" NPTF
P20 = 1¼" NPTF
P24 = 1½" NPTF
B16 = ISO 228 G-1"
B20 = ISO 228 G-1¼"
B24 = ISO 228 G-1½"
F16 = 1" SAE 4-bolt flange Code 61
F20 = 1¼" SAE 4-bolt flange Code 61
F24 = 1½" SAE 4-bolt flange Code 61
S16 = SAE-16
S20 = SAE-20
S24 = SAE-24

BOX 9 — "Out" Porting

"Out" Porting
P16 = 1" NPTF
P20 = 1¼" NPTF
P24 = 1½" NPTF
B16 = ISO 228 G-1"
B20 = ISO 228 G-1¼"
B24 = ISO 228 G-1½"
F16 = 1" SAE 4-bolt flange Code 61
F20 = 1¼" SAE 4-bolt flange Code 61
F24 = 1½" SAE 4-bolt flange Code 61
S16 = SAE-16
S20 = SAE-20
S24 = SAE-24

BOX 10 — Bypass

Bypass
Omit = 40 PSI Bypass
30 = 30 psi bypass
50 = 50 psi bypass

BOX 11 — Dirt Alarm® Options

	Omit =	None
Visual	D5 =	Visual pop-up
	D5C =	D5 in cap
Visual with Thermal Lockout	D8 =	Visual w/ thermal lockout
	D8C =	D8 in cap
Electrical	MS5 =	Electrical w/ 12 in. 18 gauge 4-conductor cable
	MS5LC =	Low current MS5
	MS10 =	Electrical w/ DIN connector (male end only)
	MS10LC =	Low current MS10
	MS11 =	Electrical w/ 12 ft. 4-conductor wire
	MS12 =	Electrical w/ 5 pin Brad Harrison connector (male end only)
	MS12LC =	Low current MS12
	MS16 =	Electrical w/ weather-packed sealed connector
	MS16LC =	Low current MS16
	MS17LC =	Electrical w/ 4 pin Brad Harrison male connector
Electrical with Thermal Lockout	MS5T =	MS5 (see above) w/ thermal lockout
	MS5LCT =	Low current MS5T
	MS10T =	MS10 (see above) w/ thermal lockout
	MS10LCT =	Low current MS10T
	MS12T =	MS12 (see above) w/ thermal lockout
	MS12LCT =	Low current MS12T
	MS16T =	MS16 (see above) w/ thermal lockout
	MS16LCT =	Low current MS16T
	MS17LCT =	Low current MS17T
Electrical Visual	MS13 =	Supplied w/ threaded connector & light
	MS14 =	Supplied w/ 5 pin Brad Harrison connector & light (male end)
Electrical Visual with Thermal Lockout	MS13DCT =	MS13 (see above), direct current, w/ thermal lockout
	MS13DCLCT =	Low current MS13DCT
	MS14DCT =	MS14 (see above), direct current, w/ thermal lockout
	MS14DCLCT =	Low current MS14DCT

BOX 12 — Test Points

Test Points	
Omit = None	
U =	Test point in cap (upstream)
UU =	Test points in block (upstream and downstream)

NOTES:

Box 2. Double and triple stacking of K-size elements can be replaced by KK and 27K elements, respectively. Number of elements must equal 1 when using KK or 27K elements. ZW media not available in 27K length.

Box 4 & 5. Replacement element part numbers are identical to K9 replacement parts. Please reference page 184.

Box 6. For options H, V, and H.5, all aluminum parts are anodized. H.5 seal designation includes the following: EPR seals, stainless steel wire mesh on elements, and light oil coating on housing exterior. Viton® is a registered trademark of DuPont Dow Elastomers.Skydrol® is a registered trademark of Solutia Inc.

Box 12. Option UU not available in combination with indicator in block.

Model No. of filter in photograph is QF539QZ10P32.

Features and Benefits

- Element changeout from the top minimizes oil spillage
- Available with optional core assembly to accommodate coreless elements
- Offered with standard Q, QPML deep-pleated and QCLQF coreless elements in 16" and 39" lengths with standard Viton® seals
- Offered in pipe, SAE straight thread, and flange porting
- Optional inlet and outlet test points
- WQF5 model for water service also available
- Various Dirt Alarm® options

300 gpm
1135 L/min
500 psi
35 bar

Filter Housing Specifications

Flow Rating:	Up to 300 gpm (1135 L/min) for 150 SUS (32 cSt) fluids
Max. Operating Pressure:	500 psi (35 bar)
Min. Yield Pressure:	2500 psi (172 bar), per NFPA T2.6.1-R1-2005
Rated Fatigue Pressure:	Contact Factory
Temp. Range:	-20°F to 225°F (-29°C to 107°C)
Bypass Setting:	Cracking: 30 psi (2.1 bar) Full Flow: 55 psi (3.8 bar)
Porting Base:	Cast Aluminum
Element Case:	Steel
Cap:	Ductile Iron
Weight of QF516: Weight of QF539:	85 lbs. (39 kg) 120 lbs. (55 kg)
Element Change Clearance:	16Q 12.0" (205 mm) 39Q 33.8" (859 mm)

Fluid Compatibility

Type Fluid	Appropriate Schroeder Media
Petroleum Based Fluids	All Z-Media® and ASP® media (synthetic)
High Water Content	All Z-Media® and ASP® media (synthetic)
Invert Emulsions	10 and 25 µ Z-Media® and 10 µ ASP® media (synthetic)
Water Glycols	3, 5, 10 and 25 µ Z-Media® and all ASP® Media (synthetic)
Phosphate Esters	All Z-Media® (synthetic) with H (EPR) seal designation and all ASP® media (synthetic)
Skydrol®	3, 5, 10 and 25 µ Z-Media® (synthetic) with H.5 seal designation (EPR seals and stainless steel wire mesh in element, and light oil coating on housing exterior) and all ASP® media (synthetic)

In-Line Filter

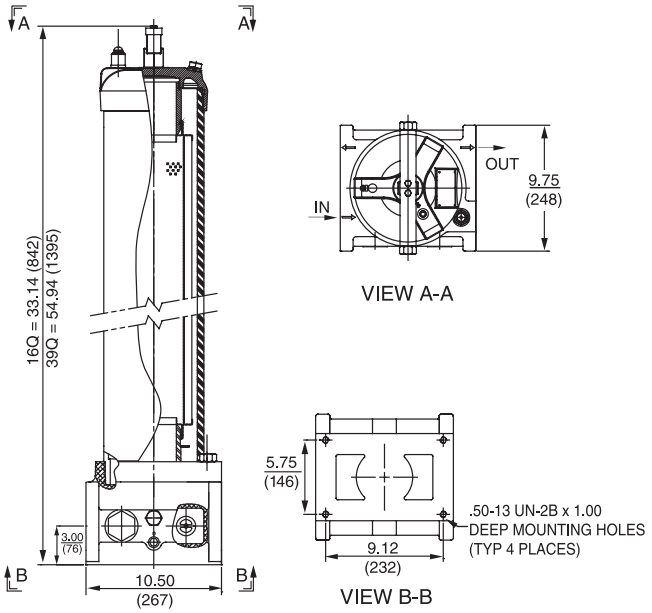

Metric dimensions in ( ).
Dimensions shown are inches (millimeters) for general information and overall envelope size only.
For complete dimensions please contact Schroeder Industries to request a certified print.

Element Performance Information & Dirt Holding Capacity

		Filtration Ratio Per ISO 4572/NFPA T3.10.8.8 Using automated particle counter (APC) calibrated per ISO 4402			Filtration Ratio per ISO 16889 Using APC calibrated per ISO 11171	
	Element	$ß_x \geq 75$	$ß_x \geq 100$	$ß_x \geq 200$	$ß_x(c) \geq 200$	$ß_x(c) \geq 1000$
16Q	Z1/CLQFZ1/PMLZ1	<1.0	<1.0	<1.0	<4.0	4.2
	Z3/CLQFZ3/PMLZ3	<1.0	<1.0	<2.0	<4.0	4.8
	Z5/CLQFZ5/PMLZ5	2.5	3.0	4.0	4.8	6.3
	Z10/CLQFZ10/PMLZ10	7.4	8.2	10.0	8.0	10.0
	Z25/CLQFZ25/PMLZ25	18.0	20.0	22.5	19.0	24.0
39Q	Z1/CLQFZ1/PMLZ1	<1.0	<1.0	<1.0	<4.0	4.2
	Z3/CLQFZ3/PMLZ3	<1.0	<1.0	<2.0	<4.0	4.8
	Z5/CLQFZ5/PMLZ5	2.5	3.0	4.0	4.8	6.3
	Z10/CLQFZ10/PMLZ10	7.4	8.2	10.0	8.0	10.0

	Element	DHC (gm)	Element	DHC (gm)	Element	DHC (gm)
16Q	Z1	276	CLQFZ1	307	PMLZ1	307
	Z3	283	CLQFZ3	315	PMLZ3	315
	Z5	351	CLQFZ5	364	PMLZ5	364
	Z10	280	CLQFZ10	306	PMLZ10	330
	Z25	254	CLQFZ25	278	PMLZ25	299
39Q	Z1	974	CLQFZ1	1259	PMLZ1	1485
	Z3	1001	CLQFZ3	1293	PMLZ3	1525
	Z5	954	CLQFZ5	1302	PMLZ5	1235
	Z10	940	CLQFZ10	1214	PMLZ10	1432
	Z25	853	CLQFZ25	1102	PMLZ25	1299

Element Collapse Rating: Q and QPML: 150 psid (10 bar), QCLQF: 100 psid (7 bar)

Flow Direction: Outside In

Element Nominal Dimensions:
- 16Q: 6.0" (150 mm) O.D. x 16.85" (430 mm) long
- 16QCLQF: 6.0" (150 mm) O.D. x 18.21" (463 mm) long
- 16QPML: 6.0" (150 mm) O.D. x 16.00" (405 mm) long
- 39QCLQF: 6.0" (150 mm) O.D. x 40.01" (1016 mm) long
- 39QPML: 6.0" (150 mm) O.D. x 37.80" (960 mm) long

Pressure Drop Information

Based on Flow Rate and Viscosity

$\Delta P_{housing}$

QF5 $\Delta P_{housing}$ for fluids with sp gr (specific gravity) = 0.86:

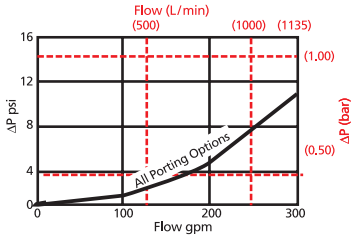

$\Delta P_{element}$

16QCLQFZ

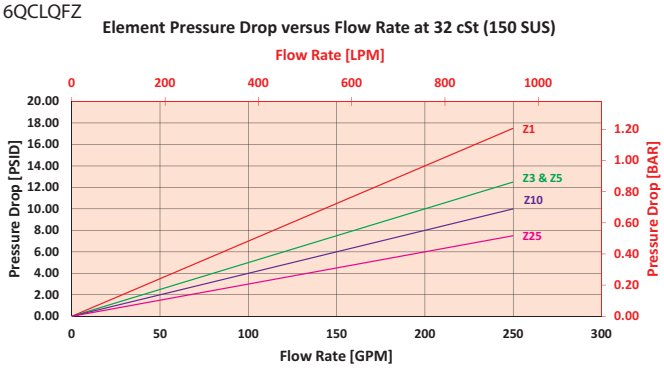

39QCLQFZ

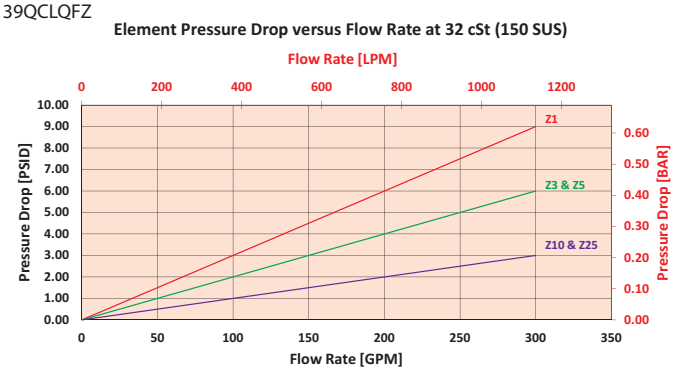

$$\Delta P_{filter} = \Delta P_{housing} + (\Delta P_{element} * V_f)$$

Exercise:

Determine ΔP_{filter} at 100 gpm (379 L/min) for QF539QZ3P32UDPG using 160 SUS (34 cSt) fluid.

Use the housing pressure curve to determine $\Delta P_{housing}$ at 100 gpm. In this case, $\Delta P_{housing}$ is 2 psi (.14 bar) on the graph for the QF5 housing.

Use the element pressure curve to determine $\Delta P_{element}$ at 100 gpm. In this case, $\Delta P_{element}$ is 1 psi (.07 bar) according to the graph for the 39QZ3 element.

Because the viscosity in this sample is 160 SUS (34 cSt), we determine the Viscosity Factor (V_f) by dividing the Operating Fluid Viscosity with the Standard Viscosity of 150 SUS (32 cSt). To best determine your Operating Fluid Viscosity, please reference the chart in Appendix D.

Finally, the overall filter pressure differential, ΔP_{filter}, is calculated by adding $\Delta P_{housing}$ with the true element pressure differential, ($\Delta P_{element} * V_f$). The $\Delta P_{element}$ from the graph has to be multiplied by the viscosity factor to get the true pressure differential across the element.

Solution:

$\Delta P_{housing}$ = 2 psi [.14 bar] | $\Delta P_{element}$ = 1 psi [.07 bar]

V_f = 160 SUS (34 cSt) / 150 SUS (32 cSt) = 1.1

ΔP_{filter} = 2 psi + (1 psi * 1.1) = 3.1 psi

OR

ΔP_{filter} = .14 bar + (.07 bar * 1.1) = .22 bar

Note:
If your element is not graphed, use the following equation:
$\Delta P_{element}$ = Flow Rate x ΔP_f. Plug this variable into the overall pressure drop equation.

Ele.	ΔP	Ele.	ΔP	Ele.	ΔP
16QAS3V	0.04	16QPMLZ1	0.08	39QZ1	0.03
16QAS5V	0.04	16QPMLZ3	0.05	39QZ3	0.01
16QAS10V	0.03	16QPMLZ5	0.05	39QZ5	0.01
16QPML-AS3V	0.05	16QPMLZ10	0.04	39QZ10	0.01
16QPML-AS5V	0.05	16QPMLZ25	0.02	39QZ25	0.01
16QPML-AS10V	0.04	39QAS3V	0.01	39QPMLZ1	0.03
16QZ1	0.09	39QAS5V	0.01	39QPMLZ3	0.02
16QZ3	0.04	39QAS10V	0.01	39QPMLZ5	0.02
16QZ5	0.04	39QPMLAS-3V	0.02	39QPMLZ10	0.01
16QZ10	0.03	39QPMLAS-5V	0.02	39QPMLZ25	0.01
16QZ25	0.01	39QPMLAS-10V	0.01		

QF5 In-Line Filter

Filter Model Number Selection

How to Build a Valid Model Number for a Schroeder QF5:

BOX 1	BOX 2	BOX 3	BOX 4	BOX 5	BOX 6	BOX 7	BOX 8	BOX 9	BOX 10
QF5 –	–	–	–	–	–	–	–	–	–

BOX 1	BOX 2	BOX 3	BOX 4	BOX 5	BOX 6	BOX 7	BOX 8	BOX 9	BOX 10	
QF5 –	39 –	Q –	Z –	3 –	–	P32 –	–	U –	DPG	=QF539QZ3P32UDPG

BOX 1

Filter Series
QF5
WQF5 (Water)

BOX 2

Element Length (in)
16
39

BOX 3

Element Style
Q
QCLQF
QPML

BOX 4

Media Type
Z = Excellement® Z-Media® (synthetic)
AS = Anti-Stat Pleat media (synthetic)
W = W Media (water removal)
Water System Element Options
QM25 = Q size 25 µ M media (resuable metal)
QM60 = Q size 60 µ M media (resuable metal)
QM150 = Q size 150 µ M media (resuable metal)
(Omit box 3 and 5 if water system element is used)

BOX 5

Micron Rating
1 = 1 µ Z-Media®
3 = 3 µ AS and Z-Media®
5 = 5 µ AS and Z-Media®
10 = 10 µ AS and Z-Media®
25 = 25 µ Z-Media®

BOX 6

Housing Seal Material
Omit = Buna N
H = EPR
V = Viton®

BOX 7

Porting	
P32 = 2"NPTF	F32 = 2" SAE 4-bolt flange Code 61
P40 = 2½"NPTF	
P48 = 3"NPTF	F40 = 2½"SAE 4-bolt flange Code 61
S32 = SAE-32	F48 = 3" SAE 4-bolt flange Code 61

BOX 8

Bypass Setting
Omit = 30 psi cracking
50 = 50 psi cracking
X = Blocked bypass

BOX 9

Test Points
Omit = None
U = Test point in cap (upstream)
UU = Test points in block (upstream and downstream)

BOX 10

Dirt Alarm® Options		
None	Omit =	None
Visual	DPG =	Standard differential pressure gauge
	D5 =	Visual pop-up
	D5C =	D5 in cap
	D5R =	D5 mounted opposite standard location
Visual with Thermal Lockout	D8 =	Visual w/ thermal lockout
	D8C =	D8 in cap
	D8R =	D8 mounted opposite standard location
Electrical	MS5 =	Electrical w/ 12 in. 18 gauge 4-conductor cable
	MS5LC =	Low current MS5
	MS10 =	Electrical w/ DIN connector (male end only)
	MS10LC =	Low current MS10
	MS11 =	Electrical w/ 12 ft. 4-conductor wire
	MS12 =	Electrical w/ 5 pin Brad Harrison connector (male end only)
	MS12LC =	Low current MS12
	MS16 =	Electrical w/ weather-packed sealed connector
	MS16LC =	Low current MS16
	MS17LC =	Electrical w/ 4 pin Brad Harrison male connector
Electrical with Thermal Lockout	MS5T =	MS5 (see above) w/ thermal lockout
	MS5LCT =	Low current MS5T
	MS10T =	MS10 (see above) w/ thermal lockout
	MS10LCT =	Low current MS10T
	MS12T =	MS12 (see above) w/ thermal lockout
	MS12LCT =	Low current MS12T
	MS16T =	MS16 (see above) w/ thermal lockout
	MS16LCT =	Low current MS16T
	MS17LCT =	Low current MS17T
Electrical Visual	MS13 =	Supplied w/ threaded connector & light
	MS14 =	Supplied w/ 5 pin Brad Harrison connector & light (male end)
Electrical Visual with Thermal Lockout	MS13DCT =	MS13 (see above), direct current, w/ thermal lockout
	MS13DCLCT =	Low current MS13DCT
	MS14DCT =	MS14 (see above), direct current, w/ thermal lockout
	MS14DCLCT =	Low current MS14DCT

NOTES:

Box 2. Replacement element part numbers are a combination of Boxes 2, 3, 4 and 5 plus the letter V.
Example: 39QZ10V

Box 3. QCLQF are CoreCentric® coreless elements – housing includes rigid metal core. QPML are deep-pleated elements with more media and higher dirt holding capacity.

Box 4. For option W, Box 3 must equal Q.

Box 6. All elements for this filter are supplied with Viton® seals. Seal designation in Box 6 applies to housing only. Viton® is a registered trademark of DuPont Dow Elastomers.

Box 8. When X is paired with a standard filter series, a standard bushing and spring plate will be used.

Cold Start Protection Inside-Out Flow Filter QF5i

Model No. of filter in photograph is QF5i16QCLIZ10F3260M.

Features and Benefits (QF5i)

- Magnetic filtration protection while filter is in cold start bypass
- Coreless QCL element with inside-out flow for eco-friendly easy disposal
- Efficient means to remove both ferromagnetic and non-ferromagnetic parts from the fluid
- Designed for inside-out flow
- Element changeout from the top minimizes oil spillage
- Offered in pipe, SAE straight thread, and flange porting
- Optional inlet and outlet test points
- Various Dirt Alarm® options

120 gpm
454 L/min
500 psi
35 bar

Filter Housing Specifications

Flow Rating:	Up to 120 gpm (454 L/min) for 150 SUS (32 cSt) fluids
Max. Operating Pressure:	500 psi (35 bar)
Min. Yield Pressure:	2500 psi (172 bar), per NFPA T2.6.1-R1-2005
Rated Fatigue Pressure:	Contact Factory
Temp. Range:	-20°F to 225°F (-29°C to 107°C)
Bypass Setting:	Cracking: 60 psi (4.1 bar) Full Flow: 95 psi (6.6 bar)
Porting Base:	Cast Aluminum
Element Case:	Steel
Cap:	Ductile Iron
Weight of QF5i16: Weight of QF5i39:	85 lbs. (39 kg) 120 lbs. (55 kg)
Element Change Clearance:	16QCLI 16.0" (407 mm)

Fluid Compatibility

Type Fluid	Appropriate Schroeder Media
Petroleum Based Fluids	All Z-Media® and ASP® media (synthetic)
High Water Content	All Z-Media® and ASP® media (synthetic)
Invert Emulsions	10 and 25 µ Z-Media® and 10 µ ASP® media (synthetic)
Water Glycols	3, 5, 10 and 25 µ Z-Media® and all ASP® Media (synthetic)

QF5i Cold Start Protection Inside-Out Flow Filter

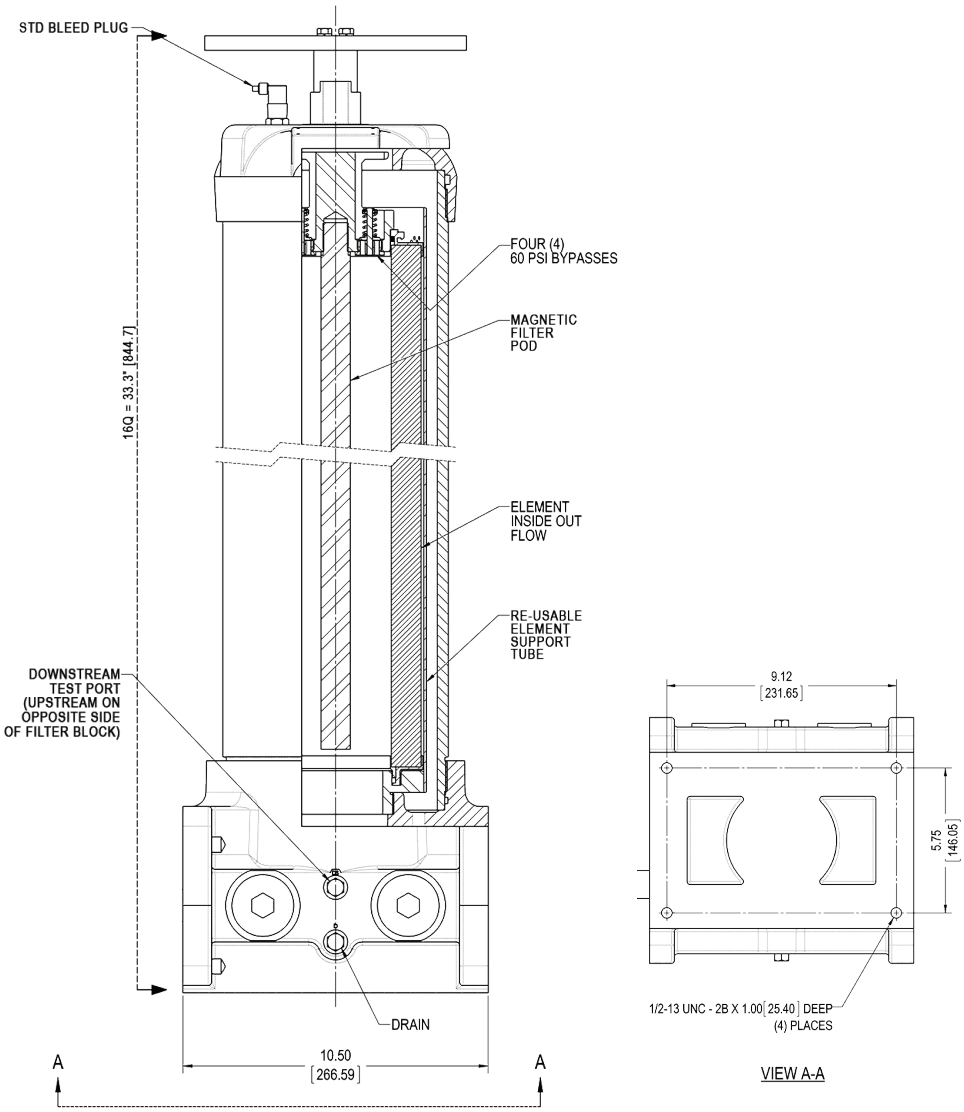

Metric dimensions in ( ).

Element Performance Information & Dirt Holding Capacity

	Element	Filtration Ratio Per ISO 4572/NFPA T3.10.8.8 Using automated particle counter (APC) calibrated per ISO 4402			Filtration Ratio per ISO 16889 Using APC calibrated per ISO 11171		Dirt Holding Capacity	
		$ß_x \geq 75$	$ß_x \geq 100$	$ß_x \geq 200$	$ß_x(c) \geq 200$	$ß_x(c) \geq 1000$	Element	DHC (gm)
16Q	CLIZ1	<1.0	<1.0	<1.0	<4.0	4.2	CLIZ1	307
	CLIZ3	<1.0	<1.0	<2.0	<4.0	4.8	CLIZ3	315
	CLIZ5	2.5	3.0	4.0	4.8	6.3	CLIZ5	364
	CLIZ10	7.4	8.2	10.0	8.0	10.0	CLIZ10	306
	CLIZ25	18.0	20.0	22.5	19.0	24.0	CLIZ25	278

Flow Direction: Inside-Out

Element Nominal Dimensions: 16QCLI: 6.0" (150 mm) O.D. x 17.81" (452 mm) long

Pressure Drop Information
Based on Flow Rate and Viscosity

$\Delta P_{housing}$

QF5i $\Delta P_{housing}$ for fluids with sp gr (specific gravity) = 0.86:

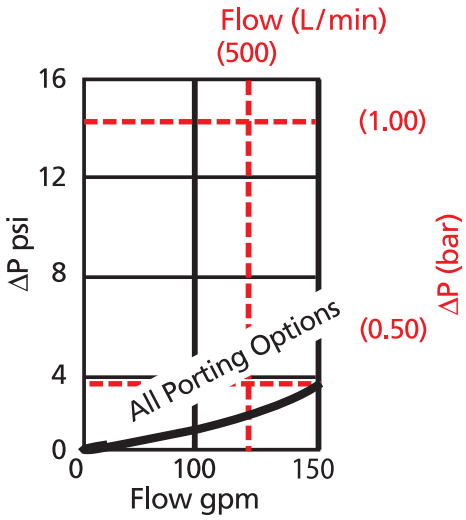

$\Delta P_{element}$

16QCLIZ

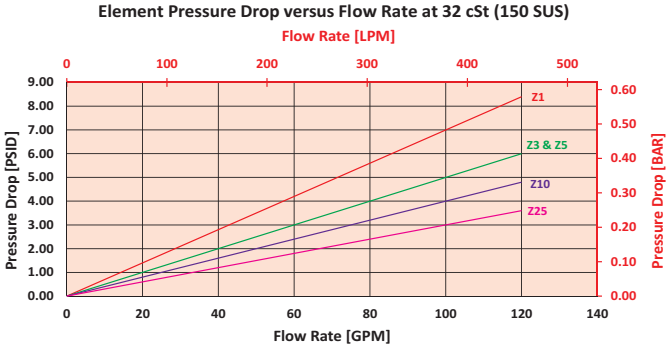

$$\Delta P_{filter} = \Delta P_{housing} + (\Delta P_{element} * V_f)$$

Exercise:

Determine ΔP_{filter} at 120 gpm (455 L/min) for QF5i16QCLIZ3P32 using 200 SUS (44 cSt) fluid.

Use the housing pressure curve to determine $\Delta P_{housing}$ at 120 gpm. In this case, $\Delta P_{housing}$ is 3 psi (.21 bar) on the graph for the QF5i housing.

Use the element pressure curve to determine $\Delta P_{element}$ at 120 gpm. In this case, $\Delta P_{element}$ is 6 psi (.415 bar) according to the graph for the 16QCLIZ3 element.

Because the viscosity in this sample is 200 SUS (44 cSt), we determine the Viscosity Factor (V_f) by dividing the Operating Fluid Viscosity with the Standard Viscosity of 150 SUS (32 cSt). To best determine your Operating Fluid Viscosity, please reference the chart in Appendix D.

Finally, the overall filter pressure differential, ΔP_{filter}, is calculated by adding $\Delta P_{housing}$ with the true element pressure differential, ($\Delta P_{element}$*V_f). The $\Delta P_{element}$ from the graph has to be multiplied by the viscosity factor to get the true pressure differential across the element.

Solution:

$\Delta P_{housing}$ = 3 psi [.21 bar] | $\Delta P_{element}$ = 6 psi [.415 bar]

V_f = 200 SUS (42.4 cSt) / 150 SUS (32 cSt) = 1.333

ΔP_{filter} = 3 psi + (6 psi * 1.333) = 11 psi

OR

ΔP_{filter} = .21 bar + (.415 bar * 1.333) = .76 bar

QF5i Cold Start Protection Inside-Out Flow Filter

Filter Model Number Selection

How to Build a Valid Model Number for a Schroeder QF5i:

BOX 1	BOX 2	BOX 3	BOX 4	BOX 5	BOX 6	BOX 7	BOX 8	BOX 9	BOX 10	BOX 11
QF5i –	–	–	–	–	–	–	–	–	–	–

BOX 1	BOX 2	BOX 3	BOX 4	BOX 5	BOX 6	BOX 7	BOX 8	BOX 9	BOX 10	BOX 11	
QF5i –	16 –	QCLI –	Z –	3 –	–	P32 –	60 –	M –	U –	DPG	=QF5i16QCLIZ3-P3260MUDPG

BOX 1 — Filter Series

QF5i

BOX 2 — Element Length (in)

16

BOX 3 — Element Style

QCLI

BOX 4 — Media Type

Z = Excellement® Z-Media® (synthetic)

BOX 5 — Micron Rating

1 = 1 µm Z-Media®
3 = 3 µm Z-Media®
5 = 5 µm Z-Media®
10 = 10 µm Z-Media®
25 = 25 µm Z-Media®

BOX 6 — Housing Seal Material

Omit = Buna N
V = Viton®

BOX 7 — Porting

P32 = 2"NPTF
P40 = 2½"NPTF
P48 = 3"NPTF
S32 = SAE-32
F32 = 2" SAE 4-bolt flange Code 61
F40 = 2½"SAE 4-bolt flange Code 61
F48 = 3" SAE 4-bolt flange Code 61

BOX 8 — Bypass Setting

60 = 60 psi cracking

BOX 9 — Magnet

Omit = No Magnet
M = Magnetic Filter Rod

BOX 10 — Test Points

Omit = No Test point
U = Test point in cap (upstream)
UU = Test points in block (upstream and downstream)

BOX 11 — Dirt Alarm® Options

	Omit =	None
Visual	DPG =	Standard differential pressure gauge
	D5 =	Visual pop-up
Visual with Thermal Lockout	D8 =	Visual w/ thermal lockout
Electrical	MS5 =	Electrical w/ 12 in. 18 gauge 4-conductor cable
	MS5LC =	Low current MS5
	MS10 =	Electrical w/ DIN connector (male end only)
	MS10LC =	Low current MS10
	MS11 =	Electrical w/ 12 ft. 4-conductor wire
	MS12 =	Electrical w/ 5 pin Brad Harrison connector (male end only)
	MS12LC =	Low current MS12
	MS16 =	Electrical w/ weather-packed sealed connector
	MS16LC =	Low current MS16
	MS17LC =	Electrical w/ 4 pin Brad Harrison male connector
Electrical with Thermal Lockout	MS5T =	MS5 (see above) w/ thermal lockout
	MS5LCT =	Low current MS5T
	MS10T =	MS10 (see above) w/ thermal lockout
	MS10LCT =	Low current MS10T
	MS12T =	MS12 (see above) w/ thermal lockout
	MS12LCT =	Low current MS12T
	MS16T =	MS16 (see above) w/ thermal lockout
	MS16LCT =	Low current MS16T
	MS17LCT =	Low current MS17T
Electrical Visual	MS13 =	Supplied w/ threaded connector & light
	MS14 =	Supplied w/ 5 pin Brad Harrison connector & light (male end)
Electrical Visual with Thermal Lockout	MS13DCT =	MS13 (see above), direct current, w/ thermal lockout
	MS13DCLCT =	Low current MS13DCT
	MS14DCT =	MS14 (see above), direct current, w/ thermal lockout
	MS14DCLCT =	Low current MS14DCT

NOTES:

Box 2. Replacement element part numbers are a combination of Boxes 2, 3, 4 and 5 plus the letter V.
Example: 16QCLIZ10V

Box 6. All elements for this filter are supplied with Viton® seals. Seal designation in Box 6 applies to housing only.
Viton® is a registered trademark of DuPont Dow Elastomers.

Features and Benefits

- Two or three QF5 filters supplied in series as a single filter assembly providing in-line single pass particulate and water filtration
- Element changeout from the top minimizes oil spillage
- Available with optional core assembly to accommodate coreless elements
- Offered with standard Q, QPML deep-plated and QCLQF coreless elements in 16" and 39" lengths with standard Viton® seals
- Offered in pipe, SAE straight thread, and flange porting
- Inlet and outlet test points
- Various Dirt Alarm® options

300 gpm
1135 L/min
500 psi
35 bar

Model No. of filter in photograph is 2QF539QEDBP40P40 and 3QF539QEDBP40P40

Filter Housing Specifications

Flow Rating:	Up to 300 gpm (1135 L/min) for 150 SUS (32 cSt) fluids
Max. Operating Pressure:	500 psi (35 bar)
Min. Yield Pressure:	2500 psi (172 bar), per NFPA T2.6.1-R1-2005
Rated Fatigue Pressure:	Contact Factory
Temp. Range:	-20°F to 225°F (-29°C to 107°C)
Bypass Setting:	Cracking: 30 psi (2.1 bar) Full Flow: 55 psi (3.8 bar)
Porting Base:	Cast Aluminum
Element Case:	Steel
Cap:	Ductile Iron
Element Change Clearance:	33.8" (859 mm)

Fluid Compatibility

Type Fluid	Appropriate Schroeder Media
Petroleum Based Fluids	All Z-Media® and ASP® media (synthetic)
High Water Content	All Z-Media® and ASP® media (synthetic)
Invert Emulsions	10 and 25 µ Z-Media® and 10 µ ASP® media (synthetic)
Water Glycols	3, 5, 10 and 25 µ Z-Media® and all ASP® Media (synthetic)
Phosphate Esters	All Z-Media® (synthetic) with H (EPR) seal designation and all ASP® media (synthetic)
Skydrol®	3, 5, 10 and 25 µ Z-Media® (synthetic) with H.5 seal designation (EPR seals and stainless steel wire mesh in element, and light oil coating on housing exterior) and all ASP® media (synthetic)

2QF5/3QF5 In-Line Filter

2QF5

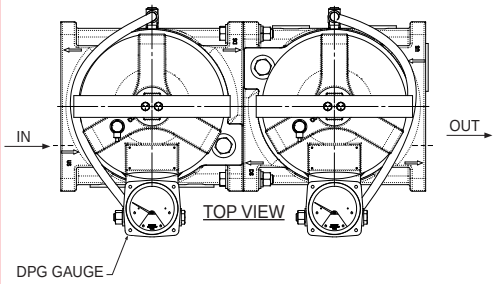

3QF5

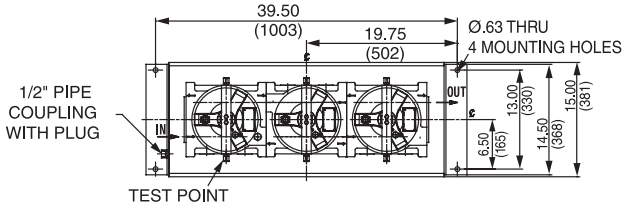

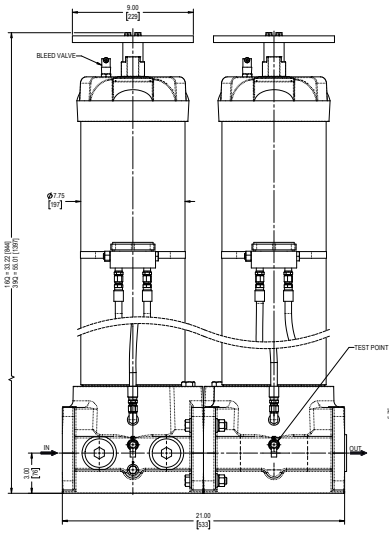

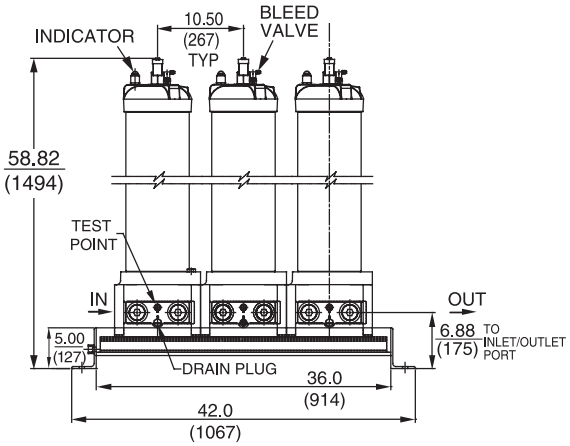

Metric dimensions in ( ).
Dimensions shown are inches (millimeters) for general information and overall envelope size only.
For complete dimensions please contact Schroeder Industries to request a certified print.

Element Performance Information & Dirt Holding Capacity

		Filtration Ratio Per ISO 4572/NFPA T3.10.8.8 Using automated particle counter (APC) calibrated per ISO 4402			Filtration Ratio per ISO 16889 Using APC calibrated per ISO 11171	
Element		$ß_x \geq 75$	$ß_x \geq 100$	$ß_x \geq 200$	$ß_x(c) \geq 200$	$ß_x(c) \geq 1000$
39Q	Z1/CLQFZ1/PMLZ1	<1.0	<1.0	<1.0	<4.0	4.2
	Z3/CLQFZ3/PMLZ3	<1.0	<1.0	<2.0	<4.0	4.8
	Z5/CLQFZ5/PMLZ5	2.5	3.0	4.0	4.8	6.3
	Z10/CLQFZ10/PMLZ10	7.4	8.2	10.0	8.0	10.0
	Z25/CLQFZ25/PMLZ25	18.0	20.0	22.5	19.0	24.0

	Element	DHC (gm)	Element	DHC (gm)	Element	DHC (gm)
39Q	Z1	974	CLQFZ1	1259	PMLZ1	1485
	Z3	1001	CLQFZ3	1293	PMLZ3	1525
	Z5	954	CLQFZ5	1302	PMLZ5	1235
	Z10	940	CLQFZ10	1214	PMLZ10	1432
	Z25	853	CLQFZ25	1102	PMLZ25	1299

Element Collapse Rating: Q and QPML: 150 psid (10 bar), QCLQF: 100 psid (7 bar)

Flow Direction: Outside In

Element Nominal Dimensions:
39Q: 6.0" (150 mm) O.D. x 38.70" (985 mm) long
39QCLQF: 6.0" (150 mm) O.D. x 40.01" (1016 mm) long
39QPML: 6.0" (150 mm) O.D. x 37.80" (960 mm) long

Pressure Drop Information

Based on Flow Rate and Viscosity

$\Delta P_{housing}$

2QF5/3QF5 $\Delta P_{housing}$ for fluids with sp gr (specific gravity) = 0.86:

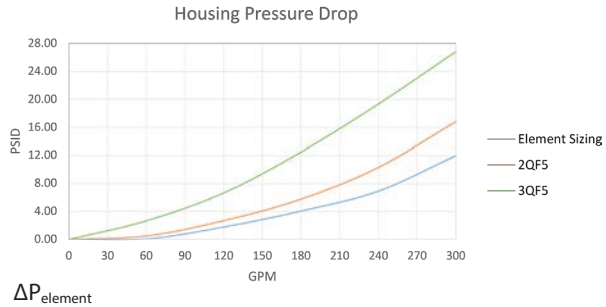

For each individual housing pressure, place the singular QF5 housing pressure curve indicated here

$\Delta P_{element}$

16QCLQF

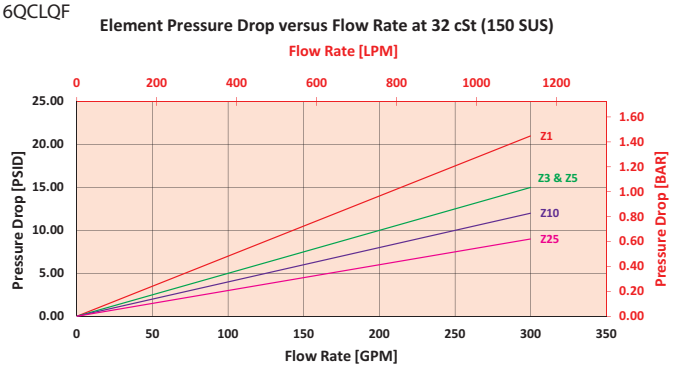

39QCLQF

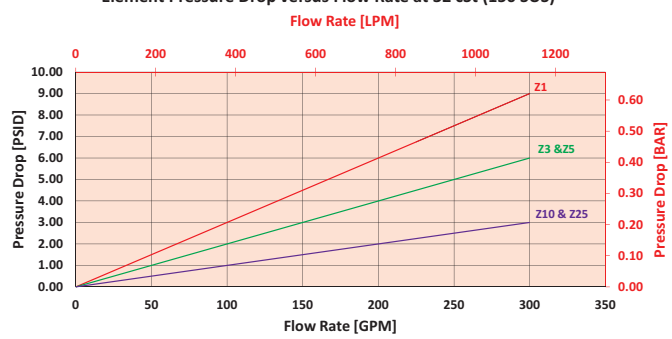

$$\Delta P_{filter} = \Delta P_{housing} + (\Delta P_{element} * V_f)$$

Exercise:

Determine ΔP_{filter} at 100 gpm (379 L/min) for 3QF539QEDBVP32P3250DPG using 160 SUS (34 cSt) fluid.

Use the housing pressure curve to determine $\Delta P_{housing}$ at 100 gpm. In this case, $\Delta P_{housing}$ is 5.5 psi (.39 bar) on the graph for the 3QF5 housing.

Use the element pressure curve to determine $\Delta P_{element}$ at 100 gpm for the first element. In this case, $\Delta P_{element}$ is 1 psi (.07 bar) according to the graph for the 39QZ25 element.

Use the element pressure curve to determine $\Delta P_{element^2}$ at 100 gpm for the first element. In this case, $\Delta P_{element}$ is 1 psi (.07 bar) according to the graph for the 39QZ10 element.

Use the element pressure curve to determine $\Delta P_{element^3}$ at 100 gpm for the first element. In this case, $\Delta P_{element}$ is 1 psi (.07 bar) according to the graph for the 39QZ3 element.

Because the viscosity in this sample is 160 SUS (34 cSt), we determine the Viscosity Factor (V_f) by dividing the Operating Fluid Viscosity with the Standard Viscosity of 150 SUS (32 cSt). To best determine your Operating Fluid Viscosity, please reference the chart in Appendix D.

Finally, the overall filter pressure differential, ΔP_{filter}, is calculated by adding $\Delta P_{housing}$ with the true element pressure differential, ($\Delta P_{element} * V_f$). The $\Delta P_{element}$ from the graph has to be multiplied by the viscosity factor to get the true pressure differential across the element.

Solution:

$\Delta P_{housing}$ = 5.5 psi [.39 bar] | $\Delta P_{element^1}$ = 1 psi [.07 bar] | $\Delta P_{element^2}$ = 1 psi [.07 bar] | $\Delta P_{element^3}$ = 1 psi [.07 bar]

V_f = 160 SUS (34 cSt) / 150 SUS (32 cSt) = 1.1

ΔP_{filter} = 5.5 psi + (1 psi * 1.1) + (1 psi * 1.1) + (1 psi * 1.1) = 8.8 psi

OR

ΔP_{filter} = .39 bar + (.07 bar * 1.1) + (.07 * 1.1) + (.07 * 1.1) = .62 bar

Note:
If your element is not graphed, use the following equation:
$\Delta P_{element}$ = Flow Rate x ΔP_f. Plug this variable into the overall pressure drop equation.

Ele.	ΔP	Ele.	ΔP	Ele.	ΔP
16QAS3V	0.04	16QPMLZ1	0.08	39QZ1	0.03
16QAS5V	0.04	16QPMLZ3	0.05	39QZ3	0.01
16QAS10V	0.03	16QPMLZ5	0.05	39QZ5	0.01
16QPML-AS3V	0.05	16QPMLZ10	0.04	39QZ10	0.01
16QPML-AS5V	0.05	16QPMLZ25	0.02	39QZ25	0.01
16QPML-AS10V	0.04	39QAS3V	0.01	39QPMLZ1	0.03
16QZ1	0.09	39QAS5V	0.01	39QPMLZ3	0.02
16QZ3	0.04	39QAS10V	0.01	39QPMLZ5	0.02
16QZ5	0.04	39QPMLAS-3V	0.02	39QPMLZ10	0.01
16QZ10	0.03	39QPMLAS-5V	0.02	39QPMLZ25	0.01
16QZ25	0.01	39QPMLAS-10V	0.01		

2QF5/3QF5 In-Line Filter

Filter Model Number Selection

How to Build a Valid Model Number for a Schroeder 2QF5:

BOX 1	BOX 2	BOX 3	BOX 4	BOX 5	BOX 6	BOX 7	BOX 8	BOX 9	BOX 10	BOX 11	BOX 12
2QF5 –	–	–	–	–	–	–	–	–	–	–	–

Example: NOTE: One option per box

BOX 1	BOX 2	BOX 3	BOX 4	BOX 5	BOX 6	BOX 7	BOX 8	BOX 9	BOX 10	BOX 11	BOX 12	
2QF5 –	39 –	Q –	D –	D –	–	V –	P32 –	P32 –	X –	U –	DPG	= 2QF539QDDVP32P32XUDPG

BOX 1 – Filter Series

2QF5
3QF5

BOX 2 – Element Length (in)

16
39

BOX 3 – Element Style

Q
QCLQF
QPML

BOX 4 – 1st Housing Element Media

A = Z1
B = Z3
C = Z5
D = Z10
E = Z25
F = W
G = AS3
H = AS5
J = AS10

BOX 5 – 2nd Housing Element Media (2QF5 & 3QF5)

A = Z1
B = Z3
C = Z5
D = Z10
E = Z25
F = W
G = AS3
H = AS5
J = AS10

BOX 6 – 3rd Housing Element Media (3QF5 only)

A = Z1
B = Z3
C = Z5
D = Z10
E = Z25
F = W
G = AS3
H = AS5
J = AS10

BOX 7 – Housing Seal Material

Omit = Buna N
H = EPR
V = Viton®

BOX 8 – "IN" Porting

P32 = 2"NPTF
P40 = 2½"NPTF
P48 = 3"NPTF
S32 = SAE-32
F32 = 2"SAE 4-bolt flange Code 61
F40 = 2½"SAE 4-bolt flange Code 61
F48 = 3"SAE 4-bolt flange Code 61

BOX 9 – "OUT" Porting

P32 = 2"NPTF
P40 = 2½"NPTF
P48 = 3"NPTF
S32 = SAE-32
F32 = 2"SAE 4-bolt flange Code 61
F40 = 2½"SAE 4-bolt flange Code 61
F48 = 3"SAE 4-bolt flange Code 61

BOX 10 – Bypass Setting

Omit = 30 psi cracking
50 = 50 psi cracking
X = Blocked bypass

BOX 11 – Test Points

Omit = None
U = Test point in cap (upstream)

BOX 12 – Dirt Alarm® Options

None	Omit =	None
Visual	DPG =	Standard differential pressure gauge
	D5 =	Visual pop-up
	D5C =	D5 in cap
	D5R =	D5 mounted opposite standard location
Visual with Thermal Lockout	D8 =	Visual w/ thermal lockout
	D8C =	D8 in cap
	D8R =	D8 mounted opposite standard location
Electrical	MS5 =	Electrical w/ 12 in. 18 gauge 4-conductor cable
	MS5LC =	Low current MS5
	MS10 =	Electrical w/ DIN connector (male end only)
	MS10LC =	Low current MS10
	MS11 =	Electrical w/ 12 ft. 4-conductor wire
	MS12 =	Electrical w/ 5 pin Brad Harrison connector (male end only)
	MS12LC =	Low current MS12
	MS16 =	Electrical w/ weather-packed sealed connector
	MS16LC =	Low current MS16
	MS17LC =	Electrical w/ 4 pin Brad Harrison male connector
Electrical with Thermal Lockout	MS5T =	MS5 (see above) w/ thermal lockout
	MS5LCT =	Low current MS5T
	MS10T =	MS10 (see above) w/ thermal lockout
	MS10LCT =	Low current MS10T
	MS12T =	MS12 (see above) w/ thermal lockout
	MS12LCT =	Low current MS12T
	MS16T =	MS16 (see above) w/ thermal lockout
	MS16LCT =	Low current MS16T
	MS17LCT =	Low current MS17T
Electrical Visual	MS13 =	Supplied w/ threaded connector & light
	MS14 =	Supplied w/ 5 pin Brad Harrison connector & light (male end)
Electrical Visual with Thermal Lockout	MS13DCT =	MS13 (see above), direct current, w/ thermal lockout
	MS13DCLCT =	Low current MS13DCT
	MS14DCT =	MS14 (see above), direct current, w/ thermal lockout
	MS14DCLCT =	Low current MS14DCT

NOTES:

Box 2. Replacement element part numbers are a combination of Boxes 2, 3, and 4, plus the letter V. Example: 39QZ10V

Box 3. QCLQF are CoreCentric® coreless elements – housing includes rigid metal core. QPML are deep-pleated elements with more media and higher dirt holding capacity.

Box 4. For option F, Box 3 must equal Q.

Box 7. All elements for this filter are supplied with Viton® seals. Seal designation in Box 5 applies to housing only. Viton® is a registered trademark of DuPont Dow Elastomers.

Boc 10. When X is paired with a standard filter series, a standard bushing and spring plate will be used.

Model No. of filter in photograph is QFD516QZ10F48DPG.

Features and Benefits

- Duplex filter design
- Approved for API 5L use
- Element changeout from the top minimizes oil spillage
- Available with optional core assembly to accommodate coreless elements
- Offered with standard Q, QPML deep-pleated and QCLQF coreless elements in 16" and 39" lengths with Viton® seals as the standard
- Offered in 2" and 3" SAE J518 4-bolt flange Code 61 and ANSI 300# flange porting
- Integral inlet and outlet test points are standard on all models
- Various Dirt Alarm® options
- Also available in 4, 6 or 8 housing modular designs (contact factory)

350 gpm
1325 L/min
500 psi
35 bar

Filter Housing Specifications

Flow Rating:	Up to 175 gpm (675 L/min) for 2"; 350 gpm (1325 L/min) for 3" for 150 SUS (32 cSt) fluids
Max. Operating Pressure:	500 psi (35 bar)
Min. Yield Pressure:	Contact Factory
Rated Fatigue Pressure:	Contact Factory
Temp. Range:	-15°F to 200°F (-26°C to 93°C)
Bypass Setting:	Cracking: 30 psi (2.1 bar) Full Flow: 33 psi (2.3 bar) for 2"; 38 psi (2.6 bar) for 3"
Porting Base & Cap:	Ductile Iron
Element Case & Transfer Valve:	Steel
Weight of QFD5-16Q:	410.0 lbs. (186.0 kg) for 2"; 455.0 (206.0 kg) for 3"
Weight of QFD5-39Q:	562.0 lbs. (255.0 kg) for 2"; 607.0 (275.0 kg) for 3"
Element Change Clearance:	16Q 12.00" (305 mm) 39Q 33.80" (859 mm)

Fluid Compatibility

Type Fluid	Appropriate Schroeder Media
Petroleum Based Fluids	All E media (cellulose), Z-Media® and ASP® media (synthetic)
High Water Content	All Z-Media® and ASP® media (synthetic)
Invert Emulsions	10 and 25 µ Z-Media® and 10 µ ASP® media (synthetic)
Water Glycols	3, 5, 10 and 25 µ Z-Media® and all ASP® media (synthetic)
Phosphate Esters	All Z-Media® (synthetic) with H (EPR) seal designation and all ASP® media (synthetic)

QFD5 In-Line Filter

PORT SIZE	DIM A	DIM B	DIM C	DIM D	DIM E 16Q	DIM E 39Q
2" Ports	4.00 (101.6)	8.19 (208.0)	10.75 (273.1)	4.80 (121.9)	36.50 (927)	58.31 (1481)
3" Ports	5.1 (130.2)	11.07 (281.1)	13.63 (346.1)	7.00 (177.8)	39.38 (1000)	61.19 (1559)

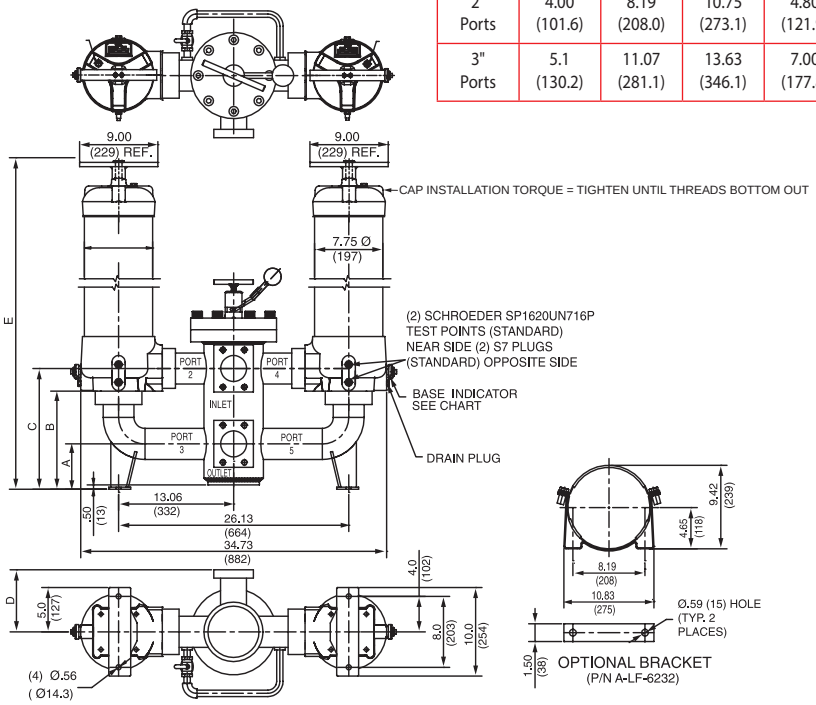

Metric dimensions in ( ).

Element Performance Information & Dirt Holding Capacity

	Element	Filtration Ratio Per ISO 4572/NFPA T3.10.8.8 Using automated particle counter (APC) calibrated per ISO 4402			Filtration Ratio per ISO 16889 Using APC calibrated per ISO 11171	
		$ß_x \geq 75$	$ß_x \geq 100$	$ß_x \geq 200$	$ß_x(c) \geq 200$	$ß_x(c) \geq 1000$
16Q	Z1/CLQFZ1/PMLZ1	<1.0	<1.0	<1.0	<4.0	4.2
	Z3/CLQFZ3/PMLZ3	<1.0	<1.0	<2.0	<4.0	4.8
	Z5/CLQFZ5/PMLZ5	2.5	3.0	4.0	4.8	6.3
	Z10/CLQFZ10/PMLZ10	7.4	8.2	10.0	8.0	10.0
	Z25/CLQFZ25/PMLZ25	18.0	20.0	22.5	19.0	24.0
39Q	Z1/CLQFZ1/PMLZ1	<1.0	<1.0	<1.0	<4.0	4.2
	Z3/CLQFZ3/PMLZ3	<1.0	<1.0	<2.0	<4.0	4.8
	Z5/CLQFZ5/PMLZ5	2.5	3.0	4.0	4.8	6.3
	Z10/CLQFZ10/PMLZ10	7.4	8.2	10.0	8.0	10.0
	Z25/CLQFZ25/PMLZ25	18.0	20.0	22.5	19.0	24.0

	Element	DHC (gm)	Element	DHC (gm)	Element	DHC (gm)
16Q	Z1	276	CLQFZ1	307	PMLZ1	307
	Z3	283	CLQFZ3	315	PMLZ3	315
	Z5	351	CLQFZ5	364	PMLZ5	364
	Z10	280	CLQFZ10	306	PMLZ10	330
	Z25	254	CLQFZ25	278	PMLZ25	299
39Q	Z1	974	CLQFZ1	1259	PMLZ1	1485
	Z3	1001	CLQFZ3	1293	PMLZ3	1525
	Z5	954	CLQFZ5	1302	PMLZ5	1235
	Z10	940	CLQFZ10	1214	PMLZ10	1432
	Z25	853	CLQFZ25	1102	PMLZ25	1299

Element Collapse Rating: Q and QPML: 150 psid (10 bar), QCLQF: 100 psid (7 bar)

Flow Direction: Outside In

Element Nominal Dimensions:
39Q: 6.0" (150 mm) O.D. x 38.70" (985 mm) long
39QCLQF: 6.0" (150 mm) O.D. x 40.01" (1016 mm) long
39QPML: 6.0" (150 mm) O.D. x 37.80" (960 mm) long

Pressure Drop Information

Based on Flow Rate and Viscosity

$\Delta P_{housing}$

QFD5 $\Delta P_{housing}$ for fluids with sp gr (specific gravity) = 0.86:

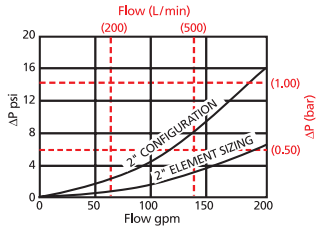

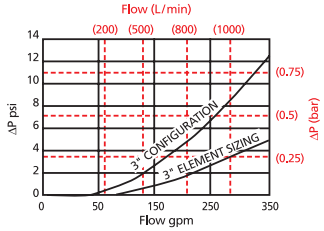

$\Delta P_{element}$

16QCLQFZ

Element Pressure Drop versus Flow Rate at 32 cSt (150 SUS)

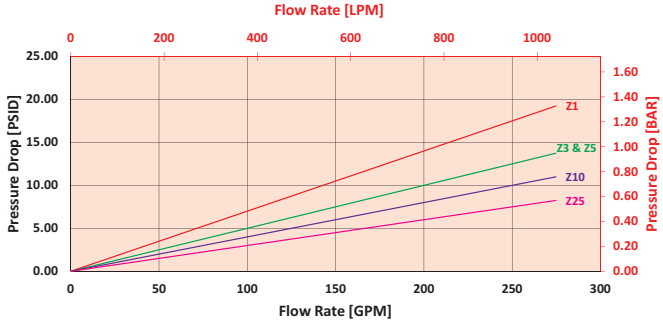

39QCLQFZ

Element Pressure Drop versus Flow Rate at 32 cSt (150 SUS)

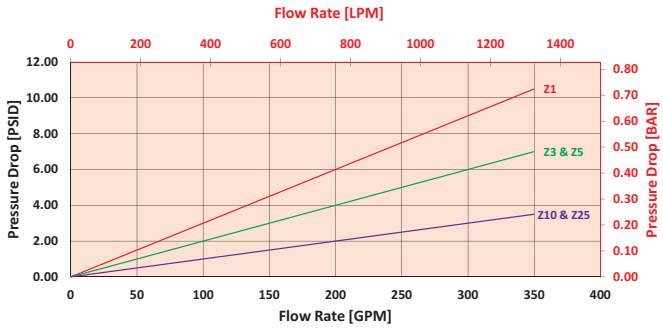

$$\Delta P_{filter} = \Delta P_{housing} + (\Delta P_{element} * V_f)$$

Exercise:

Determine ΔP_{filter} at 200 gpm (758 L/min) for QFD516QZ3F48D5C using 100 SUS (21.3 cSt) fluid.

Use the housing pressure curve to determine $\Delta P_{housing}$ at 200 gpm. In this case, $\Delta P_{housing}$ is 5 psi (.34 bar) on the graph for the QFD5 housing.

Use the element pressure curve to determine $\Delta P_{element}$ at 200 gpm. In this case, $\Delta P_{element}$ is 7 psi (.48 bar) according to the graph for the 16QCZ3 element.

Because the viscosity in this sample is 100 SUS (21.3 cSt), we determine the Viscosity Factor (V_f) by dividing the Operating Fluid Viscosity with the Standard Viscosity of 150 SUS (32 cSt). To best determine your Operating Fluid Viscosity, please reference the chart in Appendix D.

Finally, the overall filter pressure differential, ΔP_{filter}, is calculated by adding $\Delta P_{housing}$ with the true element pressure differential, ($\Delta P_{element}$*V_f). The $\Delta P_{element}$ from the graph has to be multiplied by the viscosity factor to get the true pressure differential across the element.

Solution:

$\Delta P_{housing}$ = 5 psi [.34 bar] | $\Delta P_{element}$ = 7 psi [.48 bar]

V_f = 100 SUS (21.3 cSt) / 150 SUS (32 cSt) = .67

ΔP_{filter} = 5 psi + (7 psi * .67) = 9.7 psi

OR

ΔP_{filter} = .34 bar + (.48 bar * .67) = .66 bar

Note:
If your element is not graphed, use the following equation:
$\Delta P_{element}$ = Flow Rate x ΔP_f. Plug this variable into the overall pressure drop equation.

Ele.	ΔP	Ele.	ΔP	Ele.	ΔP
16QAS3V	0.04	16QPMLZ1	0.08	39QZ1	0.03
16QAS5V	0.04	16QPMLZ3	0.05	39QZ3	0.01
16QAS10V	0.03	16QPMLZ5	0.05	39QZ5	0.01
16QPML-AS3V	0.05	16QPMLZ10	0.04	39QZ10	0.01
16QPML-AS5V	0.05	16QPMLZ25	0.02	39QZ25	0.01
16QPML-AS10V	0.04	39QAS3V	0.01	39QPMLZ1	0.03
16QZ1	0.09	39QAS5V	0.01	39QPMLZ3	0.02
16QZ3	0.04	39QAS10V	0.01	39QPMLZ5	0.02
16QZ5	0.04	39QPMLAS-3V	0.02	39QPMLZ10	0.01
16QZ10	0.03	39QPMLAS-5V	0.02	39QPMLZ25	0.01
16QZ25	0.01	39QPMLAS-10V	0.01		

QFD5 In-Line Filter

Filter Model Number Selection

How to Build a Valid Model Number for a Schroeder QF5:

BOX 1	BOX 2	BOX 3	BOX 4	BOX 5	BOX 6	BOX 7	BOX 8	BOX 9	BOX 10
QFD5 –	–	–	–	–	–	–	–	–	–

BOX 1	BOX 2	BOX 3	BOX 4	BOX 5	BOX 6	BOX 7	BOX 8	BOX 9	
QFD5 –	16 –	Q –	Z –	3 –	–	F48 –	–	D5C –	=QFD516QZ3F48D5C

BOX 1

Filter Series
QFD5

BOX 2

Element Length (in)
16
39

BOX 3

Element Style
Q
QCLQF
QPML

BOX 4

Media Type
Z = Excellement® Z-Media® (synthetic)
AS = Anti-Stat Pleat media (synthetic)
W = W media (water removal)

BOX 5

Micron Rating
1 = 1 µm Z-Media®
3 = 3 µm Z-Media®
5 = 5 µm Z-Media®
10 = 10 µm Z-Media®
25 = 25 µm Z-Media®

BOX 6

Housing Seal Material
Omit = Buna N
V = Viton®

BOX 7

Porting	
F32	= 2" SAE 4-bolt flange Code 61
F32M	= 2" SAE 4-bolt flange Code 61
FA32	= 2" ANSI 300# flange
F48	= 3" SAE 4-bolt flange Code 61
F48M	= 3" SAE 4-bolt flange Code 61
FA48	= 3" ANSI 300# flange

BOX 8

Bypass Setting
Omit = 30 psi cracking
50 = 50 psi cracking
X = Blocked bypass

BOX 9

Dirt Alarm® Options		
	Omit =	None
Visual	DPG =	Standard differential pressure gauge
	D5 =	Visual pop-up
	D5C =	D5 in cap
Visual with Thermal Lockout	D8 =	Visual w/ thermal lockout
	D8C =	D8 in cap
Electrical	MS5 =	Electrical w/ 12 in. 18 gauge 4-conductor cable
	MS5LC =	Low current MS5
	MS10 =	Electrical w/ DIN connector (male end only)
	MS10LC =	Low current MS10
	MS11 =	Electrical w/ 12 ft. 4-conductor wire
	MS12 =	Electrical w/ 5 pin Brad Harrison connector (male end only)
	MS12LC =	Low current MS12
	MS16 =	Electrical w/ weather-packed sealed connector
	MS16LC =	Low current MS16
	MS17LC =	Electrical w/ 4 pin Brad Harrison male connector
Electrical with Thermal Lockout	MS5T =	MS5 (see above) w/ thermal lockout
	MS5LCT =	Low current MS5T
	MS10T =	MS10 (see above) w/ thermal lockout
	MS10LCT =	Low current MS10T
	MS12T =	MS12 (see above) w/ thermal lockout
	MS12LCT =	Low current MS12T
	MS16T =	MS16 (see above) w/ thermal lockout
	MS16LCT =	Low current MS16T
	MS17LCT =	Low current MS17T
Electrical Visual	MS13 =	Supplied w/ threaded connector & light
	MS14 =	Supplied w/ 5 pin Brad Harrison connector & light (male end)
Electrical Visual with Thermal Lockout	MS13DCT =	MS13 (see above), direct current, w/ thermal lockout
	MS13DCLCT =	Low current MS13DCT
	MS14DCT =	MS14 (see above), direct current, w/ thermal lockout
	MS14DCLCT =	Low current MS14DCT

NOTES:

Box 2. Replacement element part numbers are a combination of Boxes 2, 3, 4 and 5 plus the letter V.
Example: 39QZ10V

Box 3. QCLQF are CoreCentric® coreless elements – housing includes rigid metal core. QPML are deep-pleated elements with more media and higher dirt holding capacity.

Box 4. For option W, Box 3 must equal Q.

Box 6. All elements for this filter are supplied with Viton® seals. Seal designation in Box 6 applies to housing only. Viton® is a registered trademark of DuPont Dow Elastomers.

Box 8. When X is paired with a standard filter series, a standard bushing and spring plate will be used.

Model No. of filter in photograph is QF1516QZ10P24MS10AC.

Features and Benefits

- Also available in L-ported version
- Element changeout from the top minimizes oil spillage
- Available with optional core assembly to accommodate coreless elements
- Offered with standard Q, QPML deep-pleated and QCLQF coreless elements in 16" and 39" lengths with Viton® seals as the standard
- Offered in pipe, SAE straight thread, and flange porting
- Integral inlet and outlet test points are standard on all models
- Various Dirt Alarm® options

450 gpm
1700 L/min
1500 psi
100 bar

Filter Housing Specifications

Flow Rating:	Up to 450 gpm (1700 L/min) for 150 SUS (32 cSt) fluids
Max. Operating Pressure:	1500 psi (100 bar)
Min. Yield Pressure:	4900 psi (340 bar), per NFPA T2.6.1
Rated Fatigue Pressure:	800 psi (55 bar), per NFPA T2.6.1-R1-2005
Temp. Range:	-20°F to 225°F (-29°C to 107°C)
Bypass Setting:	Cracking: 30 psi (2.1 bar) Full Flow: 55 psi (3.8 bar)
Porting Base & Cap:	Ductile Iron
Element Case:	Steel
Weight of QF15-16Q:	139.0 lbs. (63.0 kg)
Weight of QF15-39Q:	198.0 lbs. (90.0 kg)
Element Change Clearance:	16Q 12.0" (305 mm) 39Q 33.8" (859 mm)

Fluid Compatibility

Type Fluid	Appropriate Schroeder Media
Petroleum Based Fluids	All E media (cellulose), Z-Media® and ASP® Media (synthetic)
High Water Content	All Z-Media® and ASP® media (synthetic)
Invert Emulsions	10 and 25 µ Z-Media® and 10 µ ASP® media (synthetic)
Water Glycols	3, 5, 10 and 25 µ Z-Media® and all ASP® media (synthetic)
Phosphate Esters	All Z-Media® (synthetic) with H (EPR) seal designation and all ASP® media (synthetic)

QF15 In-Line Filter

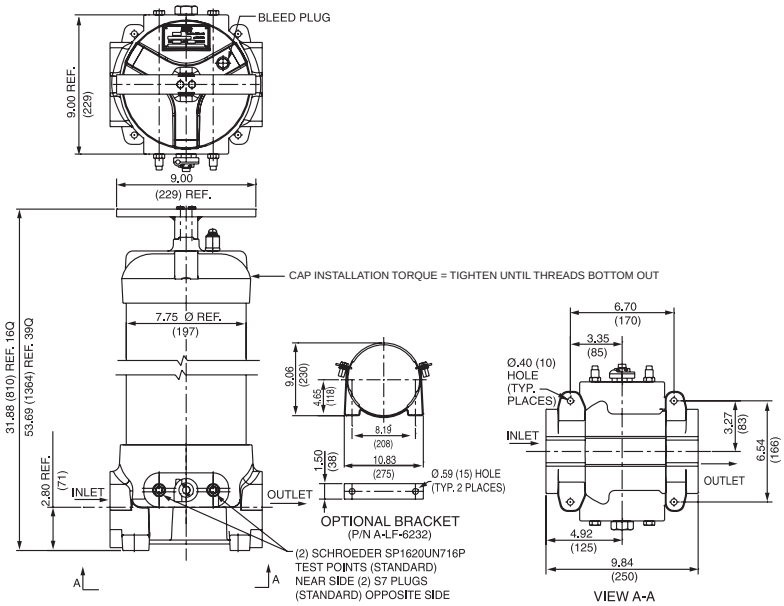

Metric dimensions in ( ).

Element Performance Information & Dirt Holding Capacity

	Element	Filtration Ratio Per ISO 4572/NFPA T3.10.8.8 Using automated particle counter (APC) calibrated per ISO 4402			Filtration Ratio per ISO 16889 Using APC calibrated per ISO 11171	
		$ß_x \geq 75$	$ß_x \geq 100$	$ß_x \geq 200$	$ß_x(c) \geq 200$	$ß_x(c) \geq 1000$
16Q	Z1/CLQFZ1/PMLZ1	<1.0	<1.0	<1.0	<4.0	4.2
	Z3/CLQFZ3/PMLZ3	<1.0	<1.0	<2.0	<4.0	4.8
	Z5/CLQFZ5/PMLZ5	2.5	3.0	4.0	4.8	6.3
	Z10/CLQFZ10/PMLZ10	7.4	8.2	10.0	8.0	10.0
	Z25/CLQFZ25/PMLZ25	18.0	20.0	22.5	19.0	24.0
39Q	Z1/CLQFZ1/PMLZ1	<1.0	<1.0	<1.0	<4.0	4.2
	Z3/CLQFZ3/PMLZ3	<1.0	<1.0	<2.0	<4.0	4.8
	Z5/CLQFZ5/PMLZ5	2.5	3.0	4.0	4.8	6.3
	Z10/CLQFZ10/PMLZ10	7.4	8.2	10.0	8.0	10.0
	Z25/CLQFZ25/PMLZ25	18.0	20.0	22.5	19.0	24.0

	Element	DHC (gm)	Element	DHC (gm)	Element	DHC (gm)
16Q	Z1	276	CLQFZ1	307	PMLZ1	307
	Z3/AS3V	283	CLQFZ3	315	PMLZ3/PMLAS3V	315
	Z5/AS5V	351	CLQFZ5	364	PMLZ5/PMLAS5V	364
	Z10/AS10V	280	CLQFZ10	306	PMLZ10/PMLAS10V	330
	Z25	254	CLQFZ25	278	PMLZ25	299
39Q	Z1	974	CLQFZ1	1259	PMLZ1	1485
	Z3/AS3V	1001	CLQFZ3	1293	PMLZ3/PMLAS3V	1525
	Z5/AS5V	954	CLQFZ5	1302	PMLZ5/PMLAS5V	1235
	Z10/AS10V	940	CLQFZ10	1214	PMLZ10/PMLAS10V	1432
	Z25	853	CLQFZ25	1102	PMLZ25	1299

Element Collapse Rating: Q and QPML: 150 psid (10 bar), QCLQF: 100 psid (7 bar)

Flow Direction: Outside In

Element Nominal Dimensions:

16Q:	6.0" (150 mm) O.D. x 16.85" (430 mm) long
16QCLQF:	6.0" (150 mm) O.D. x 18.21" (463 mm) long
16QPML:	6.0" (150 mm) O.D. x 16.00" (405 mm) long
39Q:	6.0" (150 mm) O.D. x 38.70" (985 mm) long
39QCLQF:	6.0" (150 mm) O.D. x 40.01" (1016 mm) long
39QPML:	6.0" (150 mm) O.D. x 37.80" (960 mm) long

Pressure Drop Information

Based on Flow Rate and Viscosity

$\Delta P_{housing}$

QF15 $\Delta P_{housing}$ for fluids with sp gr (specific gravity) = 0.86:

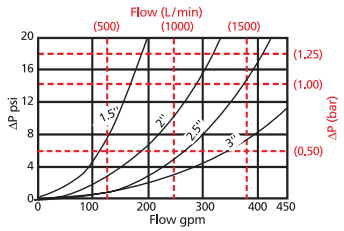

$\Delta P_{element}$

16QCLQFZ

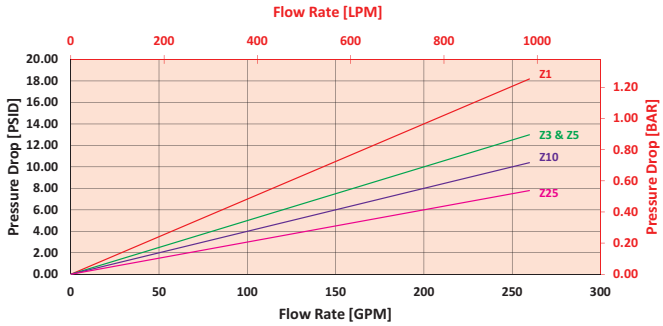

39QCLQFZ

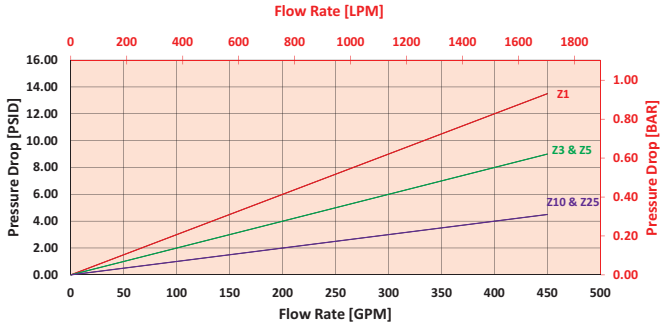

$$\Delta P_{filter} = \Delta P_{housing} + (\Delta P_{element} * V_f)$$

Exercise:

Determine ΔP_{filter} at 200 gpm (758 L/min) for QF1516QZ3D5C using 100 SUS (21.3 cSt) fluid.

Use the housing pressure curve to determine $\Delta P_{housing}$ at 200 gpm. In this case, $\Delta P_{housing}$ is 2 psi (.14 bar) on the graph for the QF15 housing.

Use the element pressure curve to determine $\Delta P_{element}$ at 200 gpm. In this case, $\Delta P_{element}$ is 7 psi (.48 bar) according to the graph for the 16QZ3 element.

Because the viscosity in this sample is 100 SUS (21.3 cSt), we determine the Viscosity Factor (V_f) by dividing the Operating Fluid Viscosity with the Standard Viscosity of 150 SUS (32 cSt). To best determine your Operating Fluid Viscosity, please reference the chart in Appendix D.

Finally, the overall filter pressure differential, ΔP_{filter}, is calculated by adding $\Delta P_{housing}$ with the true element pressure differential, ($\Delta P_{element}$*V_f). The $\Delta P_{element}$ from the graph has to be multiplied by the viscosity factor to get the true pressure differential across the element.

Solution:

$\Delta P_{housing}$ = 3 psi [.14 bar] | $\Delta P_{element}$ = 7 psi [.48 bar]

V_f = 100 SUS (21.3 cSt) / 150 SUS (32 cSt) = .67

ΔP_{filter} = 2 psi + (7 psi * .67) = 6.7 psi

OR

ΔP_{filter} = .14 bar + (.48 bar * .67) = .46 bar

Note:
If your element is not graphed, use the following equation:
$\Delta P_{element}$ = Flow Rate x ΔP_f. Plug this variable into the overall pressure drop equation.

Ele.	ΔP	Ele.	ΔP	Ele.	ΔP
16QAS3V	0.04	16QPMLZ1	0.08	39QZ1	0.03
16QAS5V	0.04	16QPMLZ3	0.05	39QZ3	0.01
16QAS10V	0.03	16QPMLZ5	0.05	39QZ5	0.01
16QPML-AS3V	0.05	16QPMLZ10	0.04	39QZ10	0.01
16QPML-AS5V	0.05	16QPMLZ25	0.02	39QZ25	0.01
16QPML-AS10V	0.04	39QAS3V	0.01	39QPMLZ1	0.03
16QZ1	0.09	39QAS5V	0.01	39QPMLZ3	0.02
16QZ3	0.04	39QAS10V	0.01	39QPMLZ5	0.02
16QZ5	0.04	39QPMLAS-3V	0.02	39QPMLZ10	0.01
16QZ10	0.03	39QPMLAS-5V	0.02	39QPMLZ25	0.01
16QZ25	0.01	39QPMLAS-10V	0.01		

QF15 In-Line Filter

Filter Model Number Selection

How to Build a Valid Model Number for a Schroeder QF15:

BOX 1	BOX 2	BOX 3	BOX 4	BOX 5	BOX 6	BOX 7	BOX 8	BOX 9
QF15 –	–	–	–	–	–	–	–	

Example: NOTE: One option per box

BOX 1	BOX 2	BOX 3	BOX 4	BOX 5	BOX 6	BOX 7	BOX 8	BOX 9	
QF15 –	16 –	Q –	Z –	3 –	–	–	–	D5C	= QF1516QZ3D5C

BOX 1

Filter Series
QF15

BOX 2

Element Length (in)
16
39

BOX 3

Element Style
Q
QCLQF
QPML

BOX 4

Media Type
Z = Excellement® Z-Media® (synthetic)
AS = Anti-Stat Pleat media (synthetic)
W = W media (water removal)

BOX 5

Micron Rating
1 = 1 µ Z-Media®
3 = 3 µ AS and Z-Media®
5 = 5 µ AS and Z-Media®
10 = 10 µ AS and Z-Media®
25 = 25 µ Z-Media®

BOX 6

Housing Seal Material
Omit = Buna N
V = Viton®

BOX 7

Porting	
P24 = 1½" NPTF	F24 = 1½" SAE 4-bolt flange Code 61
P32 = 2" NPTF	F32 = 2" SAE 4-bolt flange Code 61
P40 = 2½" NPTF	F40 = 2½" SAE 4-bolt flange Code 61
P48 = 3" NPTF	F48 = 3" SAE 4-bolt flange Code 61
S32 = SAE-32	F24M = 1½" SAE 4-bolt flange Code 61
B24 = ISO 228 G-1½"	F32M = 2" SAE 4-bolt flange Code 61
B32 = ISO 228 G-2"	F40M = 2½" SAE 4-bolt flange Code 61
B40 = ISO 228 G-2½"	F48M = 3" SAE 4-bolt flange Code 61
B48 = ISO 228 G-3"	

BOX 8

Bypass Setting
Omit = 30 psi cracking
40 = 40 psi cracking
50 = 50 psi cracking
X = Blocked bypass

BOX 9

Dirt Alarm® Options		
	Omit =	None
Visual	DPG =	Standard differential pressure gauge
	D5 =	Visual pop-up
	D5C =	D5 in cap
	D5R =	D5 mounted opposite standard location
Visual with Thermal Lockout	D8 =	Visual w/ thermal lockout
	D8C =	D8 in cap
	D8R =	D8 mounted opposite standard location
Electrical	MS5 =	Electrical w/ 12 in. 18 gauge 4-conductor cable
	MS5LC =	Low current MS5
	MS10 =	Electrical w/ DIN connector (male end only)
	MS10LC =	Low current MS10
	MS11 =	Electrical w/ 12 ft. 4-conductor wire
	MS12 =	Electrical w/ 5 pin Brad Harrison connector (male end only)
	MS12LC =	Low current MS12
	MS16 =	Electrical w/ weather-packed sealed connector
	MS16LC =	Low current MS16
	MS17LC =	Electrical w/ 4 pin Brad Harrison male connector
Electrical with Thermal Lockout	MS5T =	MS5 (see above) w/ thermal lockout
	MS5LCT =	Low current MS5T
	MS10T =	MS10 (see above) w/ thermal lockout
	MS10LCT =	Low current MS10T
	MS12T =	MS12 (see above) w/ thermal lockout
	MS12LCT =	Low current MS12T
	MS16T =	MS16 (see above) w/ thermal lockout
	MS16LCT =	Low current MS16T
	MS17LCT =	Low current MS17T
Electrical Visual	MS13 =	Supplied w/ threaded connector & light
	MS14 =	Supplied w/ 5 pin Brad Harrison connector & light (male end)
Electrical Visual with Thermal Lockout	MS13DCT =	MS13 (see above), direct current, w/ thermal lockout
	MS13DCLCT =	Low current MS13DCT
	MS14DCT =	MS14 (see above), direct current, w/ thermal lockout
	MS14DCLCT =	Low current MS14DCT

NOTES:

Box 2. Replacement element part numbers are a combination of Boxes 2, 3, 4 and 5, plus the letter V. Example: 16QZ1V

Box 3. QCLQF are CoreCentric® coreless elements – housing includes rigid metal core. QPML are deep-pleated elements with more media and higher dirt holding capacity.

Box 4. For option W, Box 3 must equal Q.

Box 6. All elements for this filter are supplied with Viton® seals. Seal designation in Box 6 applies to housing only. Viton® is a registered trademark of DuPont Dow Elastomers.

Box 7. F24M, F32M, F40M and F48M are supplied with metric flange mounting holes.

Box 8. When X is paired with a standard filter series, a standard bushing and spring plate will be used.

Integral inlet and outlet test points are standard on all models.

Base-Ported Filter QLF15

Model No. of filter in photograph is QLF1539QZ5F4850D5.

Features and Benefits

- In-line version also available
- Element changeout from the top minimizes oil spillage
- Available with optional core assembly to accommodate coreless elements
- Offered with standard Q, QPML deep-pleated and QCLQF coreless elements in 16" and 39" lengths with Viton® seals as the standard
- Offered in pipe, SAE straight thread, and flange porting
- Integral inlet and outlet test points are standard on all models
- Various Dirt Alarm® options

500 gpm
1900 L/min
1500 psi
100 bar

Filter Housing Specifications

Flow Rating:	Up to 500 gpm (1900 L/min) for 150 SUS (32 cSt) fluids
Max. Operating Pressure:	1500 psi (100 bar)
Min. Yield Pressure:	4900 psi (340 bar), per NFPA T2.6.1
Rated Fatigue Pressure:	800 psi (55 bar), per NFPA T2.6.1-R1-2005
Temp. Range:	-20°F to 225°F (-29°C to 107°C)
Bypass Setting:	Cracking: 30 psi (2 bar) Full Flow: 55 psi (4 bar)
Porting Base & Cap:	Ductile Iron
Element Case:	Steel
Weight of QLF15-16Q:	121.0 lbs. (55.0 kg)
Weight of QLF15-39Q:	180.0 lbs. (82.0 kg)
Element Change Clearance:	16Q 12.00" (305 mm) 39Q 33.80" (859 mm)

Fluid Compatibility

Type Fluid	Appropriate Schroeder Media
Petroleum Based Fluids	All E media (cellulose), Z-Media® and ASP® media (synthetic)
High Water Content	All Z-Media® and ASP® media (synthetic)
Invert Emulsions	10 µ and 25 µ Z-Media® and 10 µ ASP® media (synthetic)
Water Glycols	3, 5, 10, and 25 µ Z-Media® and all ASP® media (synthetic)
Phosphate Esters	All Z-Media® with H (EPR) seal designation and all ASP® media (synthetic)

QLF15 Base-Ported Filter

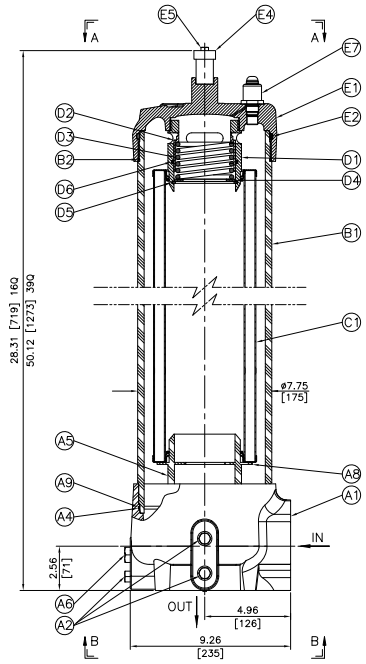

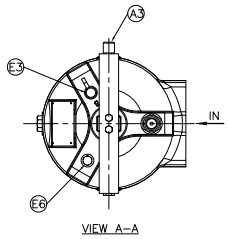

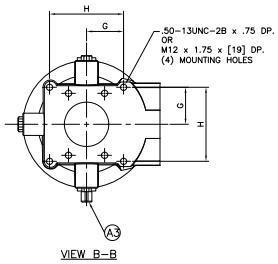

– A-LF-6232

DIMENSIONAL DATA		
PORT SIZE	DIM G	DIM H
1½" (38)	2.00 (51)	4.00 (102)
2" (51)	2.00 (51)	4.00 (102)
2½ (64)	2.00 (51)	4.00 (102)
3" (76)	2.50 (63.5)	4.00 (102)

Metric dimensions in ( ).

Element Performance Information & Dirt Holding Capacity

		Filtration Ratio Per ISO 4572/NFPA T3.10.8.8 Using automated particle counter (APC) calibrated per ISO 4402			Filtration Ratio per ISO 16889 Using APC calibrated per ISO 11171	
Element		$ß_x \geq 75$	$ß_x \geq 100$	$ß_x \geq 200$	$ß_x(c) \geq 200$	$ß_x(c) \geq 1000$
16Q	Z1/CLQFZ1/PMLZ1	<1.0	<1.0	<1.0	<4.0	4.2
	Z3/CLQFZ3/PMLZ3	<1.0	<1.0	<2.0	<4.0	4.8
	Z5/CLQFZ5/PMLZ5	2.5	3.0	4.0	4.8	6.3
	Z10/CLQFZ10/PMLZ10	7.4	8.2	10.0	8.0	10.0
	Z25/CLQFZ25/PMLZ25	18.0	20.0	22.5	19.0	24.0
39Q	Z1/CLQFZ1/PMLZ1	<1.0	<1.0	<1.0	<4.0	4.2
	Z3/CLQFZ3/PMLZ3	<1.0	<1.0	<2.0	<4.0	4.8
	Z5/CLQFZ5/PMLZ5	2.5	3.0	4.0	4.8	6.3
	Z10/CLQFZ10/PMLZ10	7.4	8.2	10.0	8.0	10.0
	Z25/CLQFZ25/PMLZ25	18.0	20.0	22.5	19.0	24.0

Element		DHC (gm)	Element	DHC (gm)	Element	DHC (gm)
16Q	Z1	276	CLQFZ1	307	PMLZ1	307
	Z3	283	CLQFZ3	315	PMLZ3	315
	Z5	351	CLQFZ5	364	PMLZ5	364
	Z10	280	CLQFZ10	306	PMLZ10	330
	Z25	254	CLQFZ25	278	PMLZ25	299
39Q	Z1	974	CLQFZ1	1259	PMLZ1	1485
	Z3	1001	CLQFZ3	1293	PMLZ3	1525
	Z5	954	CLQFZ5	1302	PMLZ5	1235
	Z10	940	CLQFZ10	1214	PMLZ10	1432
	Z25	853	CLQFZ25	1102	PMLZ25	1299

Element Collapse Rating: Q and QPML: 150 psid (10 bar), QCLQF: 100 psid (7 bar)

Flow Direction: Outside In

Element Nominal Dimensions:
- 16Q: 6.0" (150 mm) O.D. x 16.85" (430 mm) long
- 16QCLQF: 6.0" (150 mm) O.D. x 18.21" (463 mm) long
- 16QPML: 6.0" (150 mm) O.D. x 16.00" (405 mm) long
- 39Q: 6.0" (150 mm) O.D. x 38.70" (985 mm) long
- 39QCLQF: 6.0" (150 mm) O.D. x 40.01" (1016 mm) long
- 39QPML: 6.0" (150 mm) O.D. x 37.80" (960 mm) long

Pressure Drop Information

Based on Flow Rate and Viscosity

$\Delta P_{housing}$

QLF15 $\Delta P_{housing}$ for fluids with sp gr (specific gravity) = 0.86:

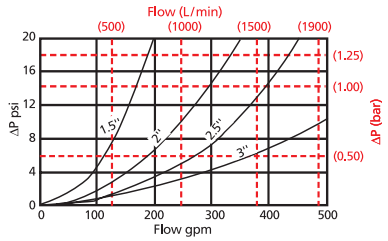

$\Delta P_{element}$

16QCLQFZ

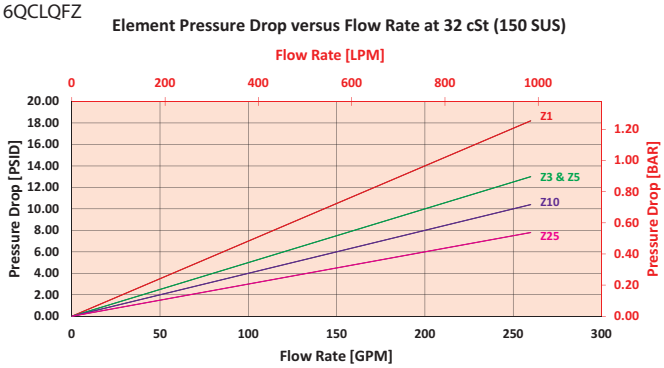

39QCLQFZ

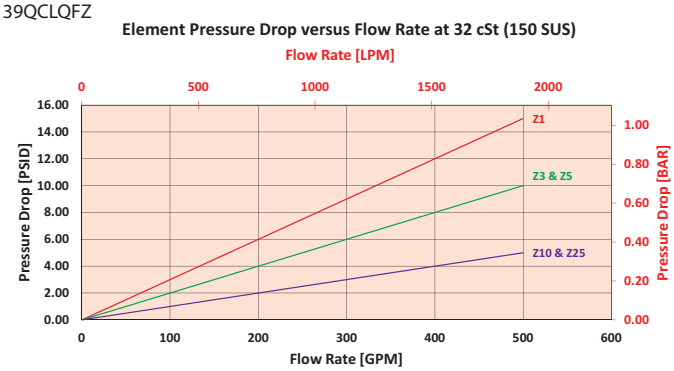

$$\Delta P_{filter} = \Delta P_{housing} + (\Delta P_{element} * V_f)$$

Exercise:

Determine ΔP_{filter} at 200 gpm (758 L/min) for QLF1516QZ3D5C using 100 SUS (21.3 cSt) fluid.

Use the housing pressure curve to determine $\Delta P_{housing}$ at 200 gpm. In this case, $\Delta P_{housing}$ is 2 psi (.14 bar) on the graph for the QLF15 housing.

Use the element pressure curve to determine $\Delta P_{element}$ at 200 gpm. In this case, $\Delta P_{element}$ is 7 psi (.48 bar) according to the graph for the 16QZ3 element.

Because the viscosity in this sample is 100 SUS (21.3 cSt), we determine the Viscosity Factor (V_f) by dividing the Operating Fluid Viscosity with the Standard Viscosity of 150 SUS (32 cSt). To best determine your Operating Fluid Viscosity, please reference the chart in Appendix D.

Finally, the overall filter pressure differential, ΔP_{filter}, is calculated by adding $\Delta P_{housing}$ with the true element pressure differential, ($\Delta P_{element}$*V_f). The $\Delta P_{element}$ from the graph has to be multiplied by the viscosity factor to get the true pressure differential across the element.

Solution:

$\Delta P_{housing}$ = 2 psi [.14 bar] | $\Delta P_{element}$ = 7 psi [.48 bar]

V_f = 100 SUS (21.3 cSt) / 150 SUS (32 cSt) = .67

ΔP_{filter} = 2 psi + (7 psi * .67) = 6.7 psi

OR

ΔP_{filter} = 14 bar + (.48 bar * .67) = .46 bar

Note:
If your element is not graphed, use the following equation:
$\Delta P_{element}$ = Flow Rate x ΔP_f. Plug this variable into the overall pressure drop equation.

Ele.	ΔP	Ele.	ΔP	Ele.	ΔP
16QAS3V	0.04	16QPMLZ1	0.08	39QZ1	0.03
16QAS5V	0.04	16QPMLZ3	0.05	39QZ3	0.01
16QAS10V	0.03	16QPMLZ5	0.05	39QZ5	0.01
16QPML-AS3V	0.05	16QPMLZ10	0.04	39QZ10	0.01
16QPML-AS5V	0.05	16QPMLZ25	0.02	39QZ25	0.01
16QPML-AS10V	0.04	39QAS3V	0.01	39QPMLZ1	0.03
16QZ1	0.09	39QAS5V	0.01	39QPMLZ3	0.02
16QZ3	0.04	39QAS10V	0.01	39QPMLZ5	0.02
16QZ5	0.04	39QPMLAS-3V	0.02	39QPMLZ10	0.01
16QZ10	0.03	39QPMLAS-5V	0.02	39QPMLZ25	0.01
16QZ25	0.01	39QPMLAS-10V	0.01		

QLF15 Base-Ported Filter

Filter Model Number Selection

How to Build a Valid Model Number for a Schroeder QF15:

BOX 1	BOX 2	BOX 3	BOX 4	BOX 5	BOX 6	BOX 7	BOX 8	BOX 9
QF15 –	–	–	–	–	–	–	–	–

Example: NOTE: One option per box

BOX 1	BOX 2	BOX 3	BOX 4	BOX 5	BOX 6	BOX 7	BOX 8	BOX 9	
QF15 –	16 –	Q –	Z –	3 –	–	–	–	D5C	= QF1516QZ3D5C

BOX 1 – Filter Series

- QLF15
- WQLF5 (Water)

BOX 2 – Element Length (in)

- 16
- 39

BOX 3 – Element Style

- Q
- QCLQF
- QPML

BOX 4 – Media Type

Z = Excellement® Z-Media® (synthetic)
AS = Anti-Stat Pleat media (synthetic)
W = W media (water removal)

Water System Element Options
QM60 = Q size 60 µ M media (reusable metal)
QM150 = Q size 150 µ M media (reusable metal)

BOX 5 – Micron Rating

1 = 1 µ Z-Media®
3 = 3 µ AS and Z-Media®
5 = 5 µ AS and Z-Media®
10 = 10 µ AS and Z-Media®
25 = 25 µ Z-Media®

BOX 6 – Housing Seal Material

Omit = Buna N
V = Viton®

BOX 7 – Porting

P24 = 1½" NPTF
P32 = 2" NPTF
P40 = 2½" NPTF
P48 = 3" NPTF

S32 = SAE-32

B24 = ISO 228 G-1½"
B32 = ISO 228 G-2
B40 = ISO 228 G-2½"
B48 = ISO 228 G-3"

F24 = 1½" SAE 4-bolt flange Code 61
F32 = 2" SAE 4-bolt flange Code 61
F40 = 2½" SAE 4-bolt flange Code 61
F48 = 3" SAE 4-bolt flange Code 61

F24M = 1½" SAE 4-bolt flange Code 61
F32M = 2" SAE 4-bolt flange Code 61
F40M = 2½" SAE 4-bolt flange Code 61
F48M = 3" SAE 4-bolt flange Code 61

BOX 8 – Bypass Setting

Omit = 30 psi cracking
40 = 40 psi cracking
50 = 50 psi cracking
X = Blocked bypass

BOX 9 – Dirt Alarm® Options

	Omit =	None
Visual	DPG =	Standard differential pressure gauge
	D5 =	Visual pop-up
	D5C =	D5 in cap
Visual with Thermal Lockout	D8 =	Visual w/ thermal lockout
	D8C =	D8 in cap
Electrical	MS5 =	Electrical w/ 12 in. 18 gauge 4-conductor cable
	MS5LC =	Low current MS5
	MS10 =	Electrical w/ DIN connector (male end only)
	MS10LC =	Low current MS10
	MS11 =	Electrical w/ 12 ft. 4-conductor wire
	MS12 =	Electrical w/ 5 pin Brad Harrison connector (male end only)
	MS12LC =	Low current MS12
	MS16 =	Electrical w/ weather-packed sealed connector
	MS16LC =	Low current MS16
	MS17LC =	Electrical w/ 4 pin Brad Harrison male connector
Electrical with Thermal Lockout	MS5T =	MS5 (see above) w/ thermal lockout
	MS5LCT =	Low current MS5T
	MS10T =	MS10 (see above) w/ thermal lockout
	MS10LCT =	Low current MS10T
	MS12T =	MS12 (see above) w/ thermal lockout
	MS12LCT =	Low current MS12T
	MS16T =	MS16 (see above) w/ thermal lockout
	MS16LCT =	Low current MS16T
	MS17LCT =	Low current MS17T
Electrical Visual	MS13 =	Supplied w/ threaded connector & light
	MS14 =	Supplied w/ 5 pin Brad Harrison connector & light (male end)
Electrical Visual with Thermal Lockout	MS13DCT =	MS13 (see above), direct current, w/ thermal lockout
	MS13DCLCT =	Low current MS13DCT
	MS14DCT =	MS14 (see above), direct current, w/ thermal lockout
	MS14DCLCT =	Low current MS14DCT

NOTES:

Box 2. Replacement element part numbers are a combination of Boxes 2, 3, 4, and 5 plus the letter V. Example: 16QZ1V

Box 3. QCLQF are CoreCentric® coreless elements – housing includes rigid metal core. QPML are deep-pleated elements with more media and higher dirt holding capacity.

Box 4. For option W, Box 3 must equal Q.

Box 6. All elements for this filter are supplied with Viton® seals. Seal designation in Box 6 applies to housing only. Viton® is a registered trademark of DuPont Dow Elastomers.

Box 7. B24, B32 and B40 are supplied with metric mounting holes. F24M, F32M, F40M and F48M are supplied with metric flange mounting holes.

Box 8: When X is paired with a standard filter series, a standard bushing and spring plate will be used.

Integral inlet and outlet test points are standard on all models.

Stainless Steel Base-Ported Filter SSQLF15

Model No. of filter in photograph is SSQLF1539QZ5F4850D5.

Features and Benefits

- In-line version also available
- Element changeout from the top minimizes oil spillage
- Offered with standard Q and QPML deep-pleated coreless elements in 16" and 39" lengths with Viton® seals as the standard
- Offered in pipe, SAE straight thread, and flange porting
- Integral inlet and outlet test points are standard on all models
- Various Dirt Alarm® options
- All stainless steel provides compatibility with water-based fluids

500 gpm
1900 L/min
1500 psi
100 bar

Filter Housing Specifications

Flow Rating:	Up to 500 gpm (1900 L/min) for 150 SUS (32 cSt) fluids
Max. Operating Pressure:	1500 psi (100 bar)
Min. Yield Pressure:	4500 psi (310 bar), per NFPA T2.6.1
Rated Fatigue Pressure:	Contact Factory
Temp. Range:	-20°F to 225°F (-29°C to 107°C)
Bypass Setting:	Cracking: 30 psi (2 bar) Full Flow: 55 psi (4 bar)
Porting Base & Cap:	Stainless Steel
Element Case:	Stainless Steel
Weight of SSQLF15-16Q:	163.0 lbs. (74.0 kg)
Weight of SSQLF15-39Q:	240.0 lbs. (109.0 kg)
Element Change Clearance:	16Q 12.00" (305 mm) 39Q 33.80" (859 mm)

Fluid Compatibility

Type Fluid	Appropriate Schroeder Media
Petroleum Based Fluids	All E media (cellulose), Z-Media® and ASP® media (synthetic)
High Water Content	All Z-Media® and ASP® media (synthetic)
Invert Emulsions	10 and 25 µ Z-Media® and 10 µ ASP® media (synthetic)
Water Glycols	3, 5, 10 and 25 µ Z-Media® and all ASP® media (synthetic)
Phosphate Esters	All Z-Media® (synthetic) with H (EPR) seal designation and all ASP® media (synthetic)

SSQLF15 Stainless Steel Base-Ported Filter

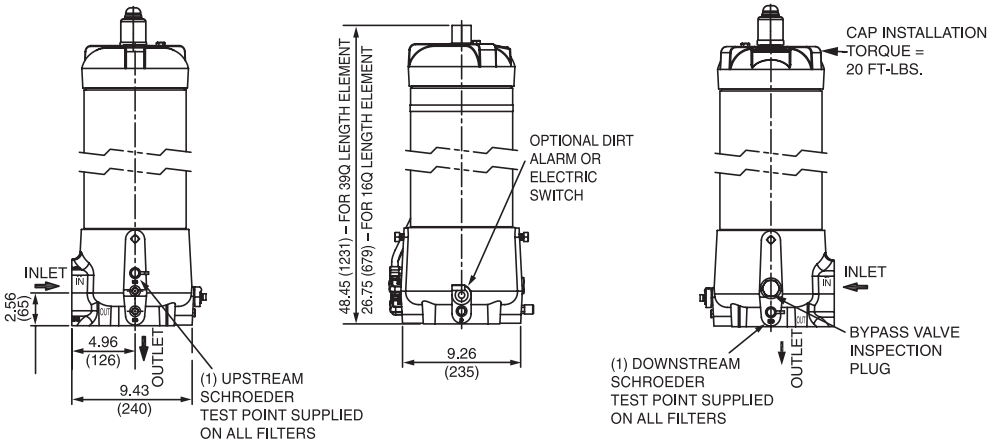

DIMENSIONAL DATA		
PORT SIZE	DIM A	DIM B
1½" (38)	2.00 (51)	4.00 (102)
2" (51)	2.00 (51)	4.00 (102)
2½" (64)	2.00 (51)	4.00 (102)
3" (76)	2.00 (51)	4.00 (102)
3" (4 bolt port only)	2.50 (64)	5.00 (127)

Metric dimensions in ( ).

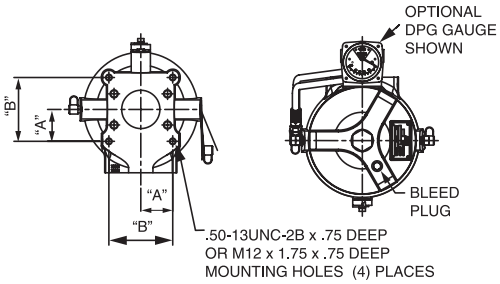

Element Performance Information & Dirt Holding Capacity

	Element	Filtration Ratio Per ISO 4572/NFPA T3.10.8.8 Using automated particle counter (APC) calibrated per ISO 4402			Filtration Ratio per ISO 16889 Using APC calibrated per ISO 11171	
		$ß_x \geq 75$	$ß_x \geq 100$	$ß_x \geq 200$	$ß_x(c) \geq 200$	$ß_x(c) \geq 1000$
16Q	Z1/CLQFZ1/PMLZ1	<1.0	<1.0	<1.0	<4.0	4.2
	Z3/CLQFZ3/PMLZ3	<1.0	<1.0	<2.0	<4.0	4.8
	Z5/CLQFZ5/PMLZ5	2.5	3.0	4.0	4.8	6.3
	Z10/CLQFZ10/PMLZ10	7.4	8.2	10.0	8.0	10.0
	Z25/CLQFZ25/PMLZ25	18.0	20.0	22.5	19.0	24.0
39Q	Z1/CLQFZ1/PMLZ1	<1.0	<1.0	<1.0	<4.0	4.2
	Z3/CLQFZ3/PMLZ3	<1.0	<1.0	<2.0	<4.0	4.8
	Z5/CLQFZ5/PMLZ5	2.5	3.0	4.0	4.8	6.3
	Z10/CLQFZ10/PMLZ10	7.4	8.2	10.0	8.0	10.0
	Z25/CLQFZ25/PMLZ25	18.0	20.0	22.5	19.0	24.0

	Element	DHC (gm)	Element	DHC (gm)
16Q	Z1	276	PMLZ1	307
	Z3	283	PMLZ3	315
	Z5	351	PMLZ5	364
	Z10	280	PMLZ10	330
	Z25	254	PMLZ25	299
39Q	Z1	974	PMLZ1	1485
	Z3	1001	PMLZ3	1525
	Z5	954	PMLZ5	1235
	Z10	940	PMLZ10	1432
	Z25	853	PMLZ25	1299

Element Collapse Rating: Q and QPML: 150 psid (10 bar)

Flow Direction: Outside In

Element Nominal Dimensions:
- 16Q: 6.0" (150 mm) O.D. x 16.85" (430 mm) long
- 16QPML: 6.0" (150 mm) O.D. x 16.00" (405 mm) long
- 39Q: 6.0" (150 mm) O.D. x 38.70" (985 mm) long
- 39QPML: 6.0" (150 mm) O.D. x 37.80" (960 mm) long

Pressure Drop Information

Based on Flow Rate and Viscosity

$\Delta P_{housing}$

SSQLF15 $\Delta P_{housing}$ for fluids with sp gr (specific gravity) = 0.86:

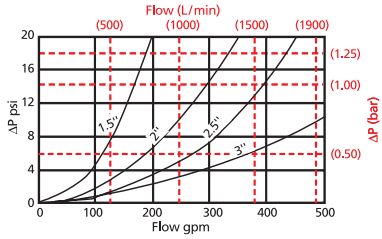

$\Delta P_{element}$

39QZ

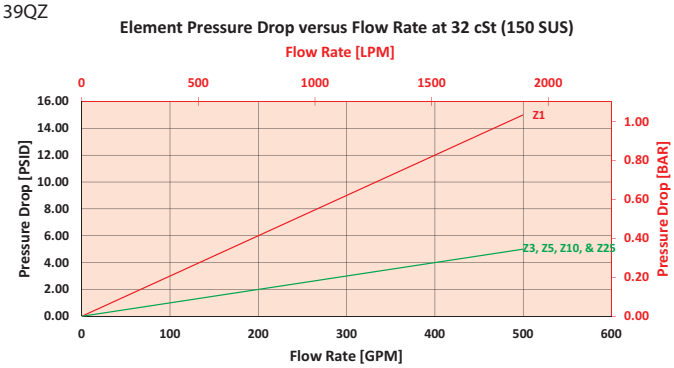

39QPMLZ

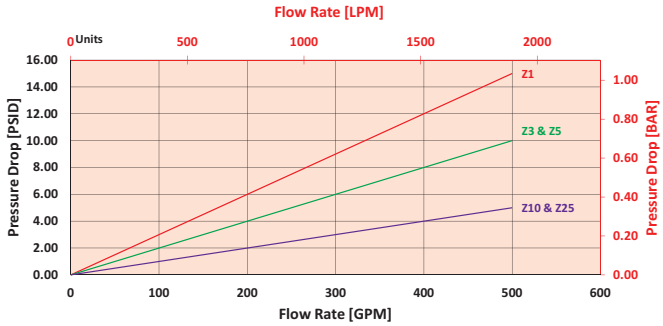

$$\Delta P_{filter} = \Delta P_{housing} + (\Delta P_{element} * V_f)$$

Exercise:

Determine ΔP_{filter} at 200 gpm (758 L/min) for SSQLF1516QZ3P48D9C using 100 SUS (21.3 cSt) fluid.

Use the housing pressure curve to determine $\Delta P_{housing}$ at 200 gpm. In this case, $\Delta P_{housing}$ is 2 psi (.14 bar) on the graph for the SSQLF housing.

Use the element pressure curve to determine $\Delta P_{element}$ at 200 gpm. In this case, $\Delta P_{element}$ is 7 psi (.48 bar) according to the graph for the 16QZ3 element.

Because the viscosity in this sample is 100 SUS (21.3 cSt), we determine the Viscosity Factor (V_f) by dividing the Operating Fluid Viscosity with the Standard Viscosity of 150 SUS (32 cSt). To best determine your Operating Fluid Viscosity, please reference the chart in Appendix D.

Finally, the overall filter pressure differential, ΔP_{filter}, is calculated by adding $\Delta P_{housing}$ with the true element pressure differential, ($\Delta P_{element}$*V_f). The $\Delta P_{element}$ from the graph has to be multiplied by the viscosity factor to get the true pressure differential across the element.

Solution:

$\Delta P_{housing}$ = 2 psi [.14 bar] | $\Delta P_{element}$ = 7 psi [.48 bar]

V_f = 100 SUS (21.3 cSt) / 150 SUS (32 cSt) = .67

ΔP_{filter} = 2 psi + (7 psi * .67) = 6.7 psi

OR

ΔP_{filter} = .14 bar + (.48 bar * .67) = .46 bar

Note:
If your element is not graphed, use the following equation:
$\Delta P_{element}$ = Flow Rate x ΔP_f. Plug this variable into the overall pressure drop equation.

Ele.	ΔP	Ele.	ΔP
16QAS3V	0.04	16QPMLZ1	0.08
16QAS5V	0.04	16QPMLZ3	0.05
16QAS10V	0.03	16QPMLZ5	0.05
16QPMLAS3V	0.05	16QPMLZ10	0.04
16QPMLAS5V	0.05	16QPMLZ25	0.02
16QPMLAS10V	0.04	39QAS3V	0.01
16QZ1	0.09	39QAS5V	0.01
16QZ3	0.04	39QAS10V	0.01
16QZ5	0.04	39QPMLAS3V	0.02
16QZ10	0.03	39QPMLAS5V	0.02
16QZ25	0.01	39QPMLAS10V	0.01

SSQLF15 Stainless Steel Base-Ported Filter

Filter Model Number Selection

How to Build a Valid Model Number for a Schroeder SSQLF15:

BOX 1		BOX 2		BOX 3		BOX 4		BOX 5		BOX 6		BOX 7		BOX 8		BOX 9
SSQLF15	–		–		–		–		–		–		–		–	

Example: NOTE: One option per box

BOX 1		BOX 2		BOX 3		BOX 4		BOX 5		BOX 6		BOX 7		BOX 8		BOX 9	
SSQLF15	–	16	–	Q	–	Z	–	3	–		–	P48	–		–	D9C	=SSQLF1516QZ3P48D9C

BOX 1

Filter Series
SSQLF15

BOX 2

Element Length (in)
16
39

BOX 3

Element Style
Q
QCLQF
QPML

BOX 4

Media Type
Z = Excellement® Z-Media® (synthetic)
AS = Anti-Stat Pleat media (synthetic)
M = M media (reusable metal)
W = W media (water removal)
150PSV = 150 µ nominal synthetic media with plastic outer wrap

BOX 5

Micron Rating
1 = 1 µ Z-Media®
3 = 3 µ AS and Z-Media®
5 = 5 µ AS and Z-Media®
10 = 10 µ AS and Z-Media®
25 = 25 µ M and Z-Media®
60 = 60 µ M media
150 = 150 µ M-media or 150 PSV
W = water removal media

BOX 6

Housing Seal Material
Omit = Buna N
H = EPR
V = Viton®

BOX 7

Porting
P24 = 1½" NPTF
P32 = 2" NPTF
P40 = 2½" NPTF
P48 = 3" NPTF
S32 = SAE-32
B24 = ISO 228 G-1½"
B32 = ISO 228 G-2"
B40 = ISO 228 G-2½"
B48 = ISO 228 G-3"
F24 = 1½" SAE 4-bolt flange Code 61
F32 = 2" SAE 4-bolt flange Code 61
F40 = 2½" SAE 4-bolt flange Code 61
F48 = 3" SAE 4-bolt flange Code 61
F24M = 1½" SAE 4-bolt flange Code 61
F32M = 2" SAE 4-bolt flange Code 61
F40M = 2½" SAE 4-bolt flange Code 61
F48M = 3" SAE 4-bolt flange Code 61

BOX 8

Bypass Setting
Omit = 30 psi cracking
50 = 50 psi cracking
X = Blocked bypass

BOX 9

Dirt Alarm® Options		
		Omit = None
Visual		DPG = Standard differential pressure gauge D9 = Visual pop-up in base (stainless steel) D9C = D9 in cap (stainless steel)

NOTES:

Box 2. Replacement element part numbers are a combination of Boxes 2, 3, 4 and 5 plus the letter V. Example: 16QZ1V

Box 4. For options W, 150PSV, M25, M60, and M150, Box 3 must equal Q.

Box 6. All elements for this filter are supplied with Viton® seals. Seal designation in Box 6 applies to housing only. Viton® is a registered trademark of DuPont Dow Elastomers.

Box 7. B24, B32 and B40 are supplied with metric mounting holes. F24M, F32M, F40M and F48M are supplied with metric flange mounting holes.

Box 8: When X is paired with a standard filter series, a standard bushing and spring plate will be used.

Integral inlet and outlet test points are standard on all models.

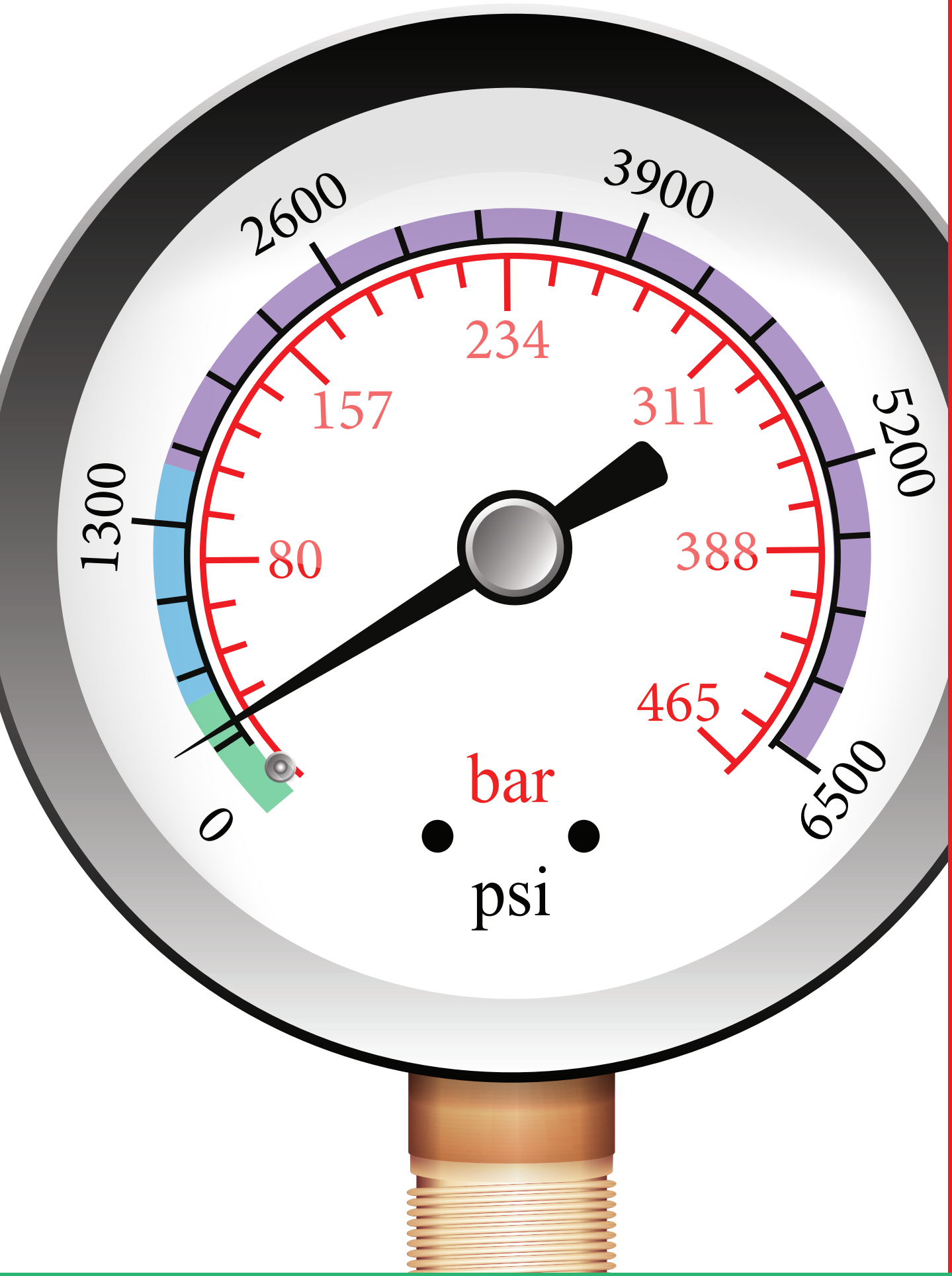

LOW PRESSURE FILTERS

Section 5:
up to 500 psi

v.040224

Low Pressure Filters Selection Guide

		Pressure psi (bar)	Flow gpm (L/min)	Element Length/Size	Page
Low Pressure Filters (up to 500 psi)	**Top-Ported Low Pressure Filters**				
	IRF	100 (7)	100 (380)	K, KK, KD, KKD	219
	TF1	300 (20)	30 (120)	A	223
	KF3 QUALITY PROTECTION	300 (20)	100 (380)	K, KK, 27K	227
	KL3 QUALITY PROTECTION	300 (20)	120 (455)	K, KK, 27K, 18LC	231
	LF1–2"	300 (20)	120 (455)	18LC	235
	MLF1 QUALITY PROTECTION	300 (20)	200 (760)	K	239
	RLD	350 (24)	100 (380)	25DN, 40D	243
	Tank-Mounted (In-Tank/Tank Top) Low Pressure Filters				
	GRTB QUALITY PROTECTION	100 (7)	100 (380)	KBG	247
	MTA	100 (7)	15 (55)	3TA	251
	MTB	100 (7)	35 (135)	3TB, 5TB	255
	ZT QUALITY PROTECTION	100 (7)	40 (150)	8Z	259
	AFT QUALITY PROTECTION	100 (7)	40 (151)	4LK, 8LK, 12LK, 16LK	263
	AFTF	100 (7)	40 (151)	4LK, 8LK, 12LK, 16LK	267
	GPT	150 (10.3)	175 (662)	15TLK	271
	KFT QUALITY PROTECTION	100 (7)	100 (380)	K, KK, KD, KKD, 27K	273
	RT QUALITY PROTECTION	100 (7)	100 (380)	K, KK, KD, KKD, 27K	277
	RTI	100 (7)	120 (455)	KI, KKI, 27KI	281
	LRT QUALITY PROTECTION	100 (7)	150 (570)	18L, 18LD	285
	ART	145 (10)	225 (850)	85Z1, 85Z3, 85Z5, 85Z10, 85Z25	289
	BRT QUALITY PROTECTION	145 (10)	160 (600)	2RBZ10/25, 3RBZ10/25, 4RBZ10/25, 6RBZ10/25	293
	TRT QUALITY PROTECTION	145 (10)	634 (2400)	2RTZ10/25, 3RTZ10/25, 4RTZ10/25, 6RTZ10/25	299
	BFT	100 (7)	300 (1135)	BB	305
	QT	100 (7)	450 (1700)	16Q, 16QPML, 39Q, 39QPML	309
	Special Feature Tank-Mounted Low Pressure Filters				
	Internal KTK QUALITY PROTECTION	100 (7)	100 (380)	K, KK, 27K	313
	Internal LTK	100 (7)	150 (570)	18L	317
	Severe Duty Tank-Mounted				
	MRT	900 (62)	150 (570)	18L	321
	Spin-On Low Pressure Filters				
	PAF1	100 (7)	20 (75)	6P	327
	MAF1	100 (7)	50 (190)	M, 10M	331
	MF2	150 (10)	60 (230)	M, 10M	335

Inline Return Filter

IRF

Model No. of filter in photograph is IRF2KZ10S20Y2.

Features and Benefits

- Low pressure top servicing in-line filter
- Meets HF4 automotive standard
- Unique side mounting flange provides reliable seal arrangement between head and bowl
- The use of K-size elements allows consolidation of inventoried replacement elements
- Single and double length options provide optimal size for specific applications
- Also available with new DirtCatcher® elements (KDZ and KKDZ)
- Various Dirt Alarm® options

100 gpm
380 L/min
100 psi
7 bar

Filter Housing Specifications

Flow Rating:	Up to 100 gpm (380 L/min) for 150 SUS (32 cSt) fluids
Max. Operating Pressure:	100 psi (7 bar)
Min. Yield Pressure:	400 psi (28 bar), per NFPA T2.6.1
Rated Fatigue Pressure:	90 psi (6 bar), per NFPA T2.6.1-2005
Temp. Range:	-20°F to 225°F (-29°C to 107°C)
Bypass Setting:	Cracking: 25 psi (1.7 bar) Full Flow: 48 psi (3.3 bar)
Porting Head: Element Case:	Sand Cast Aluminum Steel
Weight of IRF-1K: Weight of IRF-2K:	13.5 lbs. (6.12 kg) 17.0 lbs. (7.71 kg)
Element Change Clearance:	8.0" (205 mm) for 1K; 17.50" (445 mm) for KK

Fluid Compatibility

Type Fluid	Appropriate Schroeder Media
Petroleum Based Fluids	All E media (cellulose), Z-Media® and ASP® media (synthetic)
High Water Content	All Z-Media® and ASP® media (synthetic)
Invert Emulsions	10 and 25 µ Z-Media® (synthetic), 10 µ ASP® media (synthetic)
Water Glycols	3, 5, 10 and 25 µ Z-Media® (synthetic), 3, 5, and 10 µ ASP® media (synthetic)
Phosphate Esters	All Z-Media® (synthetic) with H (EPR) seal designation and 3 and 10 µ E media (cellulose) with H (EPR) seal designation and all ASP® Media (synthetic)
Skydrol®	3, 5, 10 and 25 µ Z-Media® (synthetic) with H.5 seal designation (EPR seals and stainless steel wire mesh in element, and light oil coating on housing exterior) and all ASP® media (synthetic)

Inline Return Filter

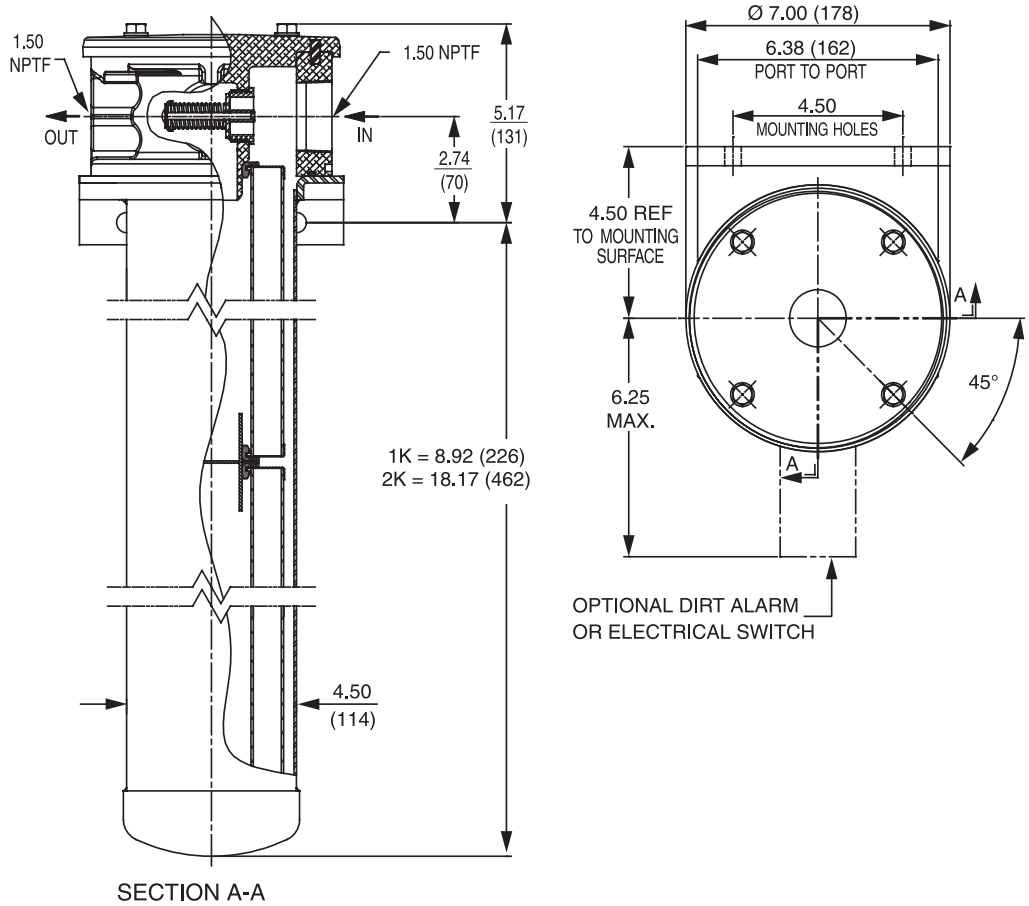

Metric dimensions in ( ).

Element Performance Information & Dirt Holding Capacity

Element	Filtration Ratio Per ISO 4572/NFPA T3.10.8.8 Using automated particle counter (APC) calibrated per ISO 4402			Filtration Ratio per ISO 16889 Using APC calibrated per ISO 11171	
	$ß_x \geq 75$	$ß_x \geq 100$	$ß_x \geq 200$	$ß_x^{(c)} \geq 200$	$ß_x^{(c)} \geq 1000$
KZ1/KKZ1/27KZ1	<1.0	<1.0	<1.0	<4.0	4.2
KZ3/KKZ3	<1.0	<1.0	<2.0	<4.0	4.8
KZ5/KKZ5	2.5	3.0	4.0	4.8	6.3
KZ10/KKZ10	7.4	8.2	10.0	8.0	10.0
KZ25/KKZ25/27KZ25	18.0	20.0	22.5	19.0	24.0
KZW1	N/A	N/A	N/A	<4.0	<4.0
KZW3/KKZW3	N/A	N/A	N/A	4.0	4.8
KZW5/KKZW5	N/A	N/A	N/A	5.1	6.4
KZW10/KKZW10	N/A	N/A	N/A	6.9	8.6
KZW25/KKZW25	N/A	N/A	N/A	15.4	18.5

Element	DHC (g)	Element	DHC (g)	Element	DHC (g)	Element	DHC (g)	Element	DHC (g)	Element	DHC (g)	Element	DHC (g)
KZ1	112	KKZ1	224	27KZ1	336	KDZ1	89	KKDZ1	188	KZW1	61		
KZ3	115	KKZ3	230	27KZ3	345	KDZ3	71	KKDZ3	150	KZW3	64	KKZW3	128
KZ5	119	KKZ5	238	27KZ5	357	KDZ5	100	KKDZ5	210	KZW5	63	KKZW5	126
KZ10	108	KKZ10	216	27KZ10	324	KDZ10	80	KKDZ10	168	KZW10	57	KKZW10	114
KZ25	93	KKZ25	186	27KZ25	279	KDZ25	81	KKDZ25	171	KZW25	79	KKZW25	158

Element Collapse Rating: 150 psid (10 bar) for standard elements
Flow Direction: Outside In
Element Nominal Dimensions:
K: 3.9" (99 mm) O.D. x 9.0" (230 mm) long
KK: 3.9" (99 mm) O.D. x 18.0" (460 mm) long
27K: 3.9" (99 mm) O.D. x 27.0" (690 mm) long

Pressure Drop Information

Based on Flow Rate and Viscosity

$\Delta P_{housing}$

IRF $\Delta P_{housing}$ for fluids with sp gr (specific gravity) = 0.86:

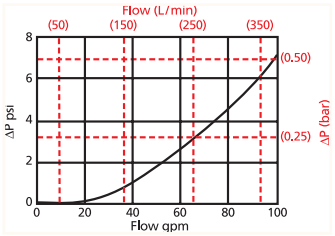

$\Delta P_{element}$

1KZ

Element Pressure Drop versus Flow Rate at 32 cSt (150 SUS)

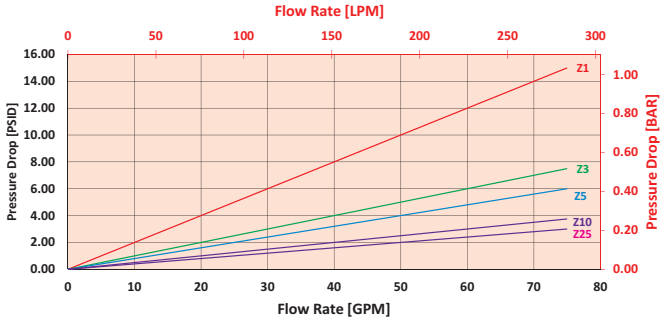

2KZ/KKZ

Element Pressure Drop versus Flow Rate at 32 cSt (150 SUS)

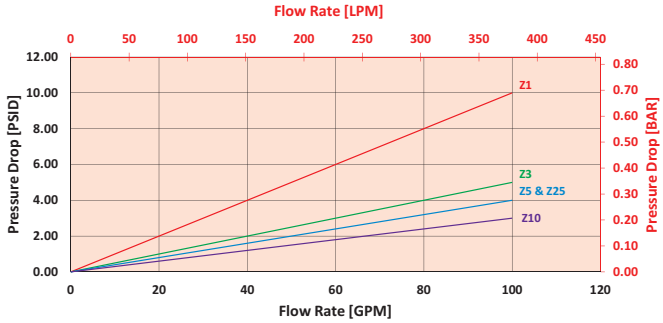

$$\Delta P_{filter} = \Delta P_{housing} + (\Delta P_{element} * V_f)$$

Exercise:

Determine ΔP_{filter} at 70 gpm (265.3 L/min) for IRF2KZ10S20Y2 using 160 SUS (34 cSt) fluid.

Use the housing pressure curve to determine $\Delta P_{housing}$ at 70 gpm. In this case, $\Delta P_{housing}$ is 3.5 psi (.24 bar) on the graph for the IRF housing.

Use the element pressure curve to determine $\Delta P_{element}$ at 70 gpm. In this case, $\Delta P_{element}$ is 2 psi (.14 bar) according to the graph for the 2KZ10 element.

Because the viscosity in this sample is 160 SUS (24 cSt), we determine the Viscosity Factor (V_f) by dividing the Operating Fluid Viscosity with the Standard Viscosity of 150 SUS (32 cSt). To best determine your Operating Fluid Viscosity, please reference the chart in Appendix D.

Finally, the overall filter pressure differential, ΔP_{filter}, is calculated by adding $\Delta P_{housing}$ with the true element pressure differential, ($\Delta P_{element} * V_f$). The $\Delta P_{element}$ from the graph has to be multiplied by the viscosity factor to get the true pressure differential across the element.

Solution:

$\Delta P_{housing}$ = 3.5 psi [.24 bar] | $\Delta P_{element}$ = 2 psi [.14 bar]

V_f = 160 SUS (34 cSt) / 150 SUS (32 cSt) = 1.1

ΔP_{filter} = 3.5 psi + (2 psi * 1.1) = 5.7 psi

OR

ΔP_{filter} = .24 bar + (.14 bar * 1.1) = .39 bar

Note:
If your element is not graphed, use the following equation:
$\Delta P_{element}$ = Flow Rate x $\Delta P_{f.}$ Plug this variable into the overall pressure drop equation.

Ele.	ΔP	Ele.	ΔP
K3	0.25	2K3	0.12
K10	0.09	2K10	0.05
K25	0.02	2K25	0.01
KAS3	0.10	2KAS3	0.05
KAS5	0.08	2KAS5	0.04
KAS10	0.05	2KAS10	0.03
KDZ1	0.24	2KDZ1	0.12
KDZ3	0.12	2KDZ3	.0.6
KDZ5	0.10	2KDZ5	0.05
KDZ10	0.06	2KDZ10	0.03
KDZ25	0.04	2KDZ25	0.02
KZW1	0.43	2KZW1	-
KZW3	0.32	2KZW3	0.16
KZW5	0.28	2KZW5	0.14
KZW10	0.23	2KZW10	0.12
KZW25	0.14	2KZW25	0.07

Inline Return Filter

Filter Model Number Selection

How to Build a Valid Model Number for a Schroeder IRF:

BOX 1	BOX 2	BOX 3	BOX 4	BOX 5	BOX 6	BOX 7	BOX 8
IRF							

Example: NOTE: One option per box

BOX 1	BOX 2	BOX 3	BOX 4	BOX 5	BOX 6	BOX 7	BOX 8	
IRF	2K	Z	10		S20		Y2	= IRF2KZ10S20Y2

BOX 1

Filter Series
IRF

BOX 2

Number and Size of Elements	
1 =	K, KK
2 =	K

BOX 3

Element Type	
Omit =	E media (cellulose)
AS =	Anti-Static Pleat Media
Z =	Excellement® Z-Media® (synthetic)
ZW =	Aqua-Excellement® ZW media
W =	Water Removal media
M =	M media (reusable metal)
DZ =	DirtCatcher® Excellement® Z-Media®

BOX 4

Micron Rating		
1 =	1 µ	(Z, ZW and DZ media)
3 =	3 µ	(E, AS, Z, ZW and DZ media)
5 =	5 µ	(AS, Z, ZW and DZ media)
10 =	10 µ	(E, AS, Z, ZW and DZ media)
25 =	25 µ	(E, AS, Z, ZW and DZ media)
60 =	60 µ	(M media)

BOX 5

Seal Material	
Omit =	Buna N
H =	EPR
V =	Viton®

BOX 6

Inlet Porting	
P16 =	1" NPTF
P20 =	1¼" NPTF
S16 =	SAE-16
S20 =	SAE-20
F20 =	1¼" SAE 4-bolt flange Code 61
F24 =	1½" SAE 4-bolt flange Code 61
B24 =	ISO 228 G-1½"

BOX 7

Bypass Setting	
Omit =	25 PSI Bypass
40 =	40 PSI Bypass

BOX 8

Dirt Alarm® Options			
		Omit =	None
Located @ Port D (Standard)	Visual	Y2 =	Back-mounted tri-color gauge
	Electrical	ES =	Electrical switch
		ES1 =	Heavy-duty electrical switch with conduit connector
		ES2=	Electrical Switch with Deutsch Connector
Located @ Port C (Optional)	Visual	Y2R =	Back-mounted gauge mounted on opposite side of standard location
	Electrical	ESR =	Electrical switch mounted on opposite side of standard location
		ES1R =	Heavy-duty electrical switch with conduit connector

Port Configuration

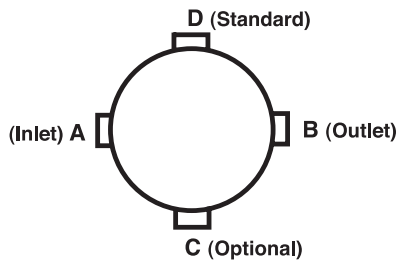

NOTES:

Box 2. Number of elements must equal 1 when using KK elements.

Box 3. Replacement element part numbers are identical to contents of Boxes 2, 3, 4, and 5. Double stacking of K-size elements can be replaced by single KK elements.

Box 5. Viton® is a registered trademark of DuPont Dow Elastomers.

Return Line Filter TF1

Model No. of filter in photograph is TF11AZ10S.

Features and Benefits

- Offered in pipe, SAE straight thread, flange and ISO 228 porting
- Various Dirt Alarm® options
- Available with No-Element indicator
- Available with NPTF inlet and outlet female test ports
- Available with magnet inserts
- Available with housing drain plug

30 gpm 120 L/min

300 psi 20 bar

Filter Housing Specifications

Flow Rating:	Up to 30 gpm (120 L/min) for 150 SUS (32 cSt) fluids
Max. Operating Pressure:	300 psi (20 bar)
Min. Yield Pressure:	1200 psi (80 bar), per NFPA T2.6.1
Rated Fatigue Pressure:	270 psi (19 bar), per NFPA T2.6.1-2005
Temp. Range:	-20°F to 225°F (-29°C to 107°C)
Bypass Setting:	Cracking: 30 psi (2 bar) Full Flow: 51 psi (4 bar)
Porting Head: Element Case:	Cast Aluminum Steel (TF1) or Stainless Steel (WTF1)
Weight of TF1-1A: Weight of TF1-2A:	5.1 lbs. (2.3 kg) 6.3 lbs. (2.9 kg)
Element Change Clearance:	3.50" (90 mm)

Fluid Compatibility

Type Fluid	Appropriate Schroeder Media
Petroleum Based Fluids	All E media (cellulose) and Z-Media® (synthetic)
High Water Content	All Z-Media® (synthetic)
Invert Emulsions	10 and 25 µ Z-Media® (synthetic)
Water Glycols	3, 5, 10 and 25 µ Z-Media® (synthetic)
Phosphate Esters	All Z-Media® (synthetic) with H (EPR) seal designation
Skydrol®	3, 5, 10 and 25 µ Z-Media® (synthetic) with H.5 seal designation (EPR seals and stainless steel wire mesh in element, and light oil coating on housing exterior)

TF1 Return Line Filter

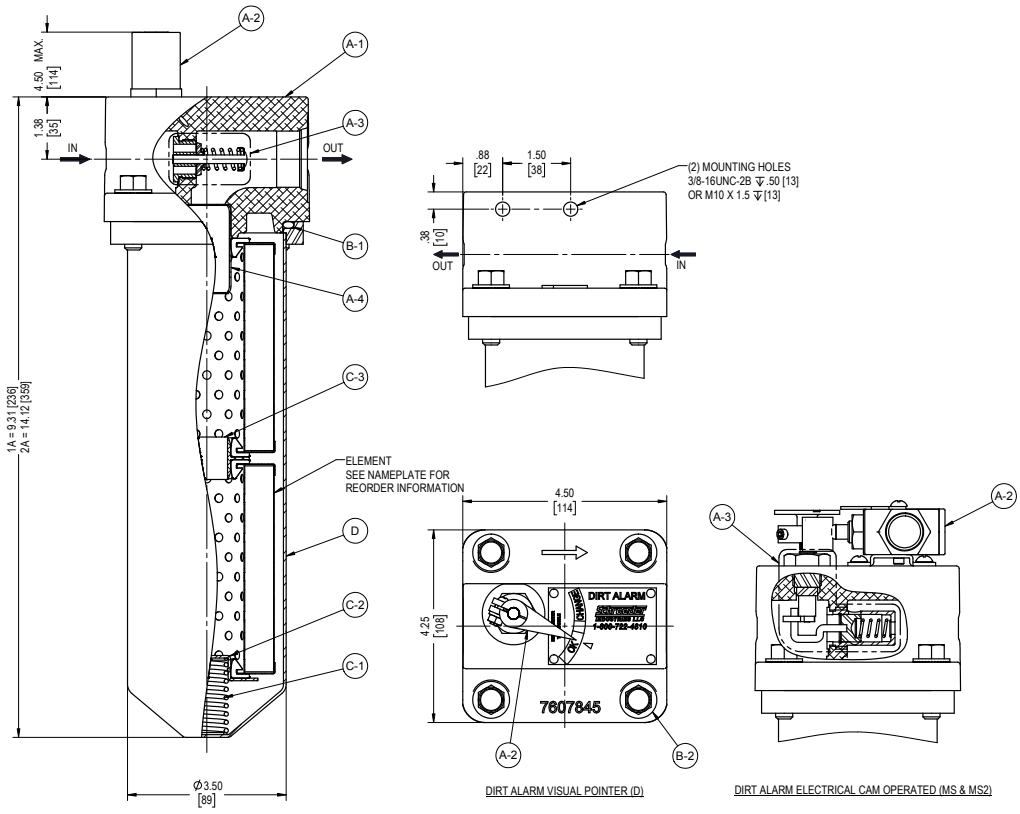

Metric dimensions in ( ).

Element Performance Information & Dirt Holding Capacity

Element	Filtration Ratio Per ISO 4572/NFPA T3.10.8.8 Using automated particle counter (APC) calibrated per ISO 4402			Filtration Ratio per ISO 16889 Using APC calibrated per ISO 11171	
	$ß_x \geq 75$	$ß_x \geq 100$	$ß_x \geq 200$	$ß_x^{(c)} \geq 200$	$ß_x^{(c)} \geq 1000$
AZ1	<1.0	<1.0	<1.0	<4.0	4.2
AZ3	<1.0	<1.0	<2.0	<4.0	4.8
AZ5	2.5	3.0	4.0	4.8	6.3
AZ10	7.4	8.2	10.0	8.0	10.0
AZ25	18.0	20.0	22.5	19.0	24.0

Element	DHC (gm)
A3	16
A10	13
AZ1	25
AZ3	26
AZ5	30
AZ10	28
AZ25	28

Element Collapse Rating: 150 psid (10 bar)

Flow Direction: Outside In

Element Nominal Dimensions: 3.0" (75 mm) O.D. x 4.5" (115 mm) long

Pressure Drop Information

Based on Flow Rate and Viscosity

$\Delta P_{housing}$

TF1 $\Delta P_{housing}$ for fluids with sp gr (specific gravity) = 0.86:

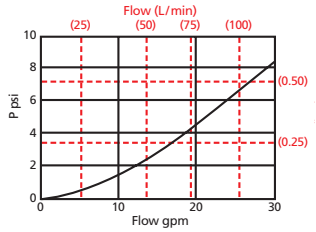

$\Delta P_{element}$

AZ

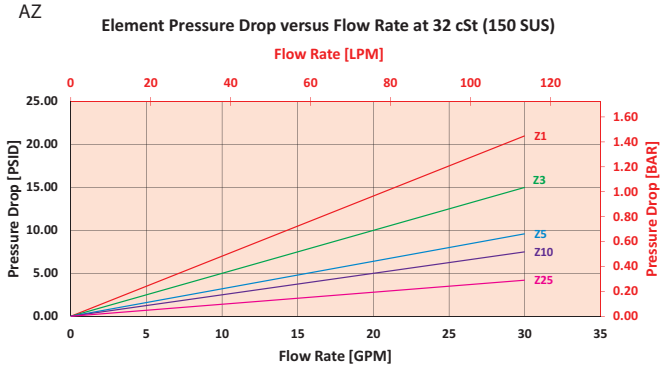

2AZ

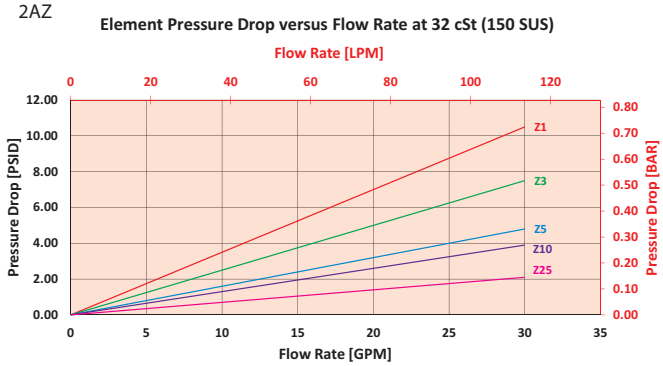

$$\Delta P_{filter} = \Delta P_{housing} + (\Delta P_{element} * V_f)$$

Exercise:

Determine ΔP_{filter} at 15 gpm (57 L/min) for TF11AZ3PD5 using 175 SUS (37.2 cSt) fluid.

Use the housing pressure curve to determine $\Delta P_{housing}$ at 15 gpm. In this case, $\Delta P_{housing}$ is 3 psi (.21 bar) on the graph for the TF1 housing.

Use the element pressure curve to determine $\Delta P_{element}$ at 15 gpm. In this case, $\Delta P_{element}$ is 7.5 psi (.52 bar) according to the graph for the AZ3 element.

Because the viscosity in this sample is 175 SUS (37.2 cSt), we determine the Viscosity Factor (V_f) by dividing the Operating Fluid Viscosity with the Standard Viscosity of 150 SUS (32 cSt). To best determine your Operating Fluid Viscosity, please reference the chart in Appendix D.

Finally, the overall filter pressure differential, ΔP_{filter}, is calculated by adding $\Delta P_{housing}$ with the true element pressure differential, ($\Delta P_{element} * V_f$). The $\Delta P_{element}$ from the graph has to be multiplied by the viscosity factor to get the true pressure differential across the element.

Solution:

$\Delta P_{housing}$ = 3 psi [.21 bar] | $\Delta P_{element}$ = 7.5 psi [.52 bar]

V_f = 175 SUS (37.2 cSt) / 150 SUS (32 cSt) = 1.2

ΔP_{filter} = 3 psi + (7.5 psi * 1.2) = 12 psi

OR

ΔP_{filter} = .21 bar + (.52 bar * 1.2) = .83 bar

Note:
If your element is not graphed, use the following equation:
$\Delta P_{element}$ = Flow Rate x $\Delta P_{f.}$ Plug this variable into the overall pressure drop equation.

Ele.	ΔP	Ele.	ΔP
A3	0.53	AA3	0.27
A10	0.36	AA10	0.18
A25	0.05	AA25	0.03

Return Line Filter

Filter Model Number Selection

How to Build a Valid Model Number for a Schroeder TF1:

BOX 1	BOX 2	BOX 3	BOX 4	BOX 5	BOX 6	BOX 7	BOX 8	BOX 9
TF1								

Example: NOTE: Only box 9 may contain more than one option

BOX 1	BOX 2	BOX 3	BOX 4	BOX 5	BOX 6	BOX 7	BOX 8	BOX 9	
TF1	1	A3			P		D5		= TF11A3PD5

BOX 1

Filter Series
TF1
WTF1

BOX 2

Number of Elements
1
2

BOX 3

Element Part Number
A3 = 3 µ E media (cellulose)
A10 = 10 µ E media (cellulose)
A25 = 25 µ E media (cellulose)
AZ1 = 1 µ Excellement® Z-Media® (synthetic)
AZ3 = 3 µ Excellement® Z-Media® (synthetic)
AZ5 = 5 µ Excellement® Z-Media® (synthetic)
AZ10 = 10 µ Excellement® Z-Media® (synthetic)
AZ25 = 25 µ Excellement® Z-Media® (synthetic)
AM10 = 10 µ M media (reusable metal)
AM25 = 25 µ M media (reusable metal)
AM60 = 60 µ M media (reusable metal)
AM150 = 150 µ M media (reusable metal)

BOX 4

Seal Material
Omit = Buna N
H = EPR
V = Viton®
H.5 = Skydrol® compatibility

BOX 5

Magnet Option
Omit = None
M = Magnet inserts

BOX 6

Porting Options
P = 1" NPTF
S = SAE-16
B = ISO 228 G-1"

BOX 7

Bypass Settings
Omit = 30 psi bypass
40 = 40 psi bypass

BOX 8

	Dirt Alarm® Options
	Omit = None
Visual	D = Pointer
	D5 = Visual pop-up
Visual with Thermal Lockout	D8 = Visual w/ thermal lockout
Electrical	MS5 = Electrical w/ 12 in. 18 gauge 4-conductor cable
	MS5LC = Low current MS5
	MS10 = Electrical w/ DIN connector (male end only)
	MS10LC = Low current MS10
	MS11 = Electrical w/ 12 ft. 4-conductor wire
	MS12 = Electrical w/ 5 pin Brad Harrison connector (male end only)
	MS12LC = Low current MS12
	MS16 = Electrical w/ weather-packed sealed connector
	MS16LC = Low current MS16
	MS17LC = Electrical w/ 4 pin Brad Harrison male connector
Electrical with Thermal Lockout	MS5T = MS5 (see above) w/ thermal lockout
	MS5LCT = Low current MS5T
	MS10T = MS10 (see above) w/ thermal lockout
	MS10LCT = Low current MS10T
	MS12T = MS12 (see above) w/ thermal lockout
	MS12LCT = Low current MS12T
	MS16T = MS16 (see above) w/ thermal lockout
	MS16LCT = Low current MS16T
	MS17LCT = Low current MS17T
Electrical Visual	MS = Cam operated switch w/ ½" conduit female connection
	MS13 = Supplied w/ threaded connector & light
	MS14 = Supplied w/ 5 pin Brad Harrison connector & light (male end)
Electrical Visual with Thermal Lockout	MS13DCT = MS13 (see above), direct current, w/ thermal lockout
	MS13DCLCT = Low current MS13DCT
	MS14DCT = MS14 (see above), direct current, w/ thermal lockout
	MS14DCLCT = Low current MS14DCT

BOX 9

Test Points
Omit = None
L = Two ¼" NPTF inlet and outlet female test ports
N = No-Element indicator
G440 = ½" drain on bottom of housing

NOTES:

Box 1. WTF1 includes a Anodized Head and a Stainless Steel Bowl.

Box 3. Replacement element part numbers are identical to contents of Boxes 3 and 4. E media elements are only available with Buna N seals.

Box 4. For option V, all aluminum parts are anodized. H.5 seal designation includes the following: EPR seals, stainless steel wire mesh on elements, and light oil coating on housing exterior. Viton® is a registered trademark of DuPont Dow Elastomers. Skydrol® is a registered trademark of Solutia Inc.

Box 6. B porting option supplied with metric mounting holes.

Return Line Filter KF3

Model No. of filter in photograph is KF31K10SD5.

Features and Benefits

- Meets HF4 automotive standard
- Offered in pipe, SAE straight thread, flange and ISO 228 porting
- Various Dirt Alarm® options
- Available with No-Element indicator
- Available with NPTF inlet and outlet female test ports
- Available with magnet inserts
- Available with housing drain plug
- Takes the standard "K" element in K, KK or 27K lengths
- Allows consolidation of inventoried replacement elements by using K-size elements
- Also available with DirtCatcher® elements (KD & KKD)
- G Available with quality-protected GeoSeal® Elements (GKF3)

Part of the Schroeder Industries 2030 Initiative

100 gpm
380 L/min
300 psi
20 bar

Filter Housing Specifications

Flow Rating:	Up to 100 gpm (380 L/min) for 150 SUS (32 cSt) fluids
Max. Operating Pressure:	300 psi (20 bar)
Min. Yield Pressure:	1000 psi (70 bar), per NFPA T2.6.1
Rated Fatigue Pressure:	290 psi (20 bar), per NFPA T2.6.1-2005
Temp. Range:	-20°F to 225°F (-29°C to 107°C)
Bypass Setting:	Cracking: 30 psi (2 bar) Full Flow: 51 psi (4 bar)
Porting Head: Element Case:	Die Cast Aluminum Steel
Weight of KF3-1K: Weight of KF3-2K: Weight of KF3-3K:	10.5 lbs. (4.8 kg) 14.2 lbs. (6.4 kg) 18.5 lbs. (8.4 kg)
Element Change Clearance:	1.50" (40 mm) for all lengths

Fluid Compatibility

Type Fluid	Appropriate Schroeder Media
Petroleum Based Fluids	All E media (cellulose), Z-Media® and ASP® media (synthetic)
High Water Content	All Z-Media® and ASP® Media (synthetic)
Invert Emulsions	10 and 25 µ Z-Media® (synthetic), 10 µ ASP® media (synthetic)
Water Glycols	3, 5, 10 and 25 µ Z-Media® (synthetic), 3, 5, and 10 µ ASP® Media (synthetic)
Phosphate Esters	All Z-Media® (synthetic) with H (EPR) seal designation and 3 and 10 µ E media (cellulose) with H (EPR) seal designation and all ASP® media (synthetic)
Skydrol®	3, 5, 10 and 25 µ Z-Media® (synthetic) with H.5 seal designation (EPR seals and stainless steel wire mesh in element, and light oil coating on housing exterior) and all ASP® media (synthetic)

KF3 Return Line Filter

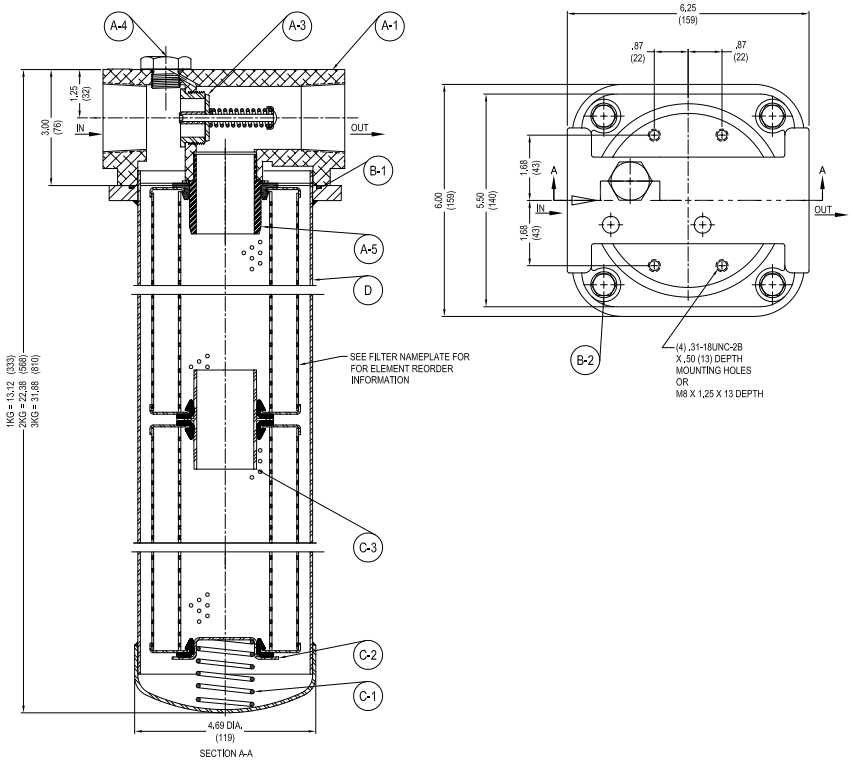

Metric dimensions in ( ).

Element Performance Information & Dirt Holding Capacity

Element	Filtration Ratio Per ISO 4572/NFPA T3.10.8.8 Using automated particle counter (APC) calibrated per ISO 4402			Filtration Ratio per ISO 16889 Using APC calibrated per ISO 11171	
	$ß_x \geq 75$	$ß_x \geq 100$	$ß_x \geq 200$	$ß_x(c) \geq 200$	$ß_x(c) \geq 1000$
KZ1/KKZ1/27KZ1	<1.0	<1.0	<1.0	<4.0	4.2
KZ3/KKZ3/27KZ3	<1.0	<1.0	<2.0	<4.0	4.8
KZ5/KKZ5/27KZ5	2.5	3.0	4.0	4.8	6.3
KZ10/KKZ10/27KZ10	7.4	8.2	10.0	8.0	10.0
KZ25/KKZ25/27KZ25	18.0	20.0	22.5	19.0	24.0
KZW1	N/A	N/A	N/A	<4.0	<4.0
KZW3/KKZW3	N/A	N/A	N/A	4.0	4.8
KZW5/KKZW5	N/A	N/A	N/A	5.1	6.4
KZW10/KKZW10	N/A	N/A	N/A	6.9	8.6
KZW25/KKZW25	N/A	N/A	N/A	15.4	18.5

Element	DHC (g)	Element	DHC (g)	Element	DHC (g)	Element	DHC (g)	Element	DHC (g)	Element	DHC (g)	Element	DHC (g)
KZ1	112	KKZ1	224	27KZ1	336	KDZ1	89	KKDZ1	188	KZW1	61		
KZ3	115	KKZ3	230	27KZ3	345	KDZ3	71	KKDZ3	150	KZW3	64	KKZW3	128
KZ5	119	KKZ5	238	27KZ5	357	KDZ5	100	KKDZ5	210	KZW5	63	KKZW5	126
KZ10	108	KKZ10	216	27KZ10	324	KDZ10	80	KKDZ10	168	KZW10	57	KKZW10	114
KZ25	93	KKZ25	186	27KZ25	279	KDZ25	81	KKDZ25	171	KZW25	79	KKZW25	158

Element Collapse Rating: 150 psid (10 bar) for standard elements

Flow Direction: Outside In

Element Nominal Dimensions:
- K: 3.9" (99 mm) O.D. x 9.0" (230 mm) long
- KK: 3.9" (99 mm) O.D. x 18.0" (460 mm) long
- 27K: 3.9" (99 mm) O.D. x 27.0" (690 mm) long

Pressure Drop Information

Based on Flow Rate and Viscosity

$\Delta P_{housing}$

KF3 $\Delta P_{housing}$ for fluids with sp gr (specific gravity) = 0.86:

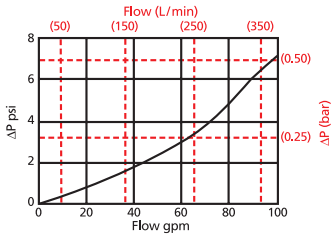

$\Delta P_{element}$

KZ

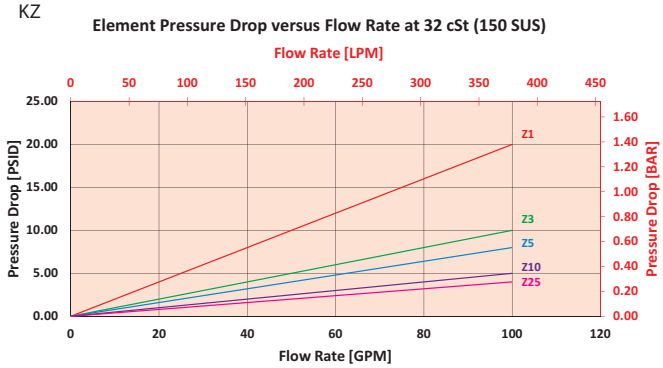

2KZ/KKZ

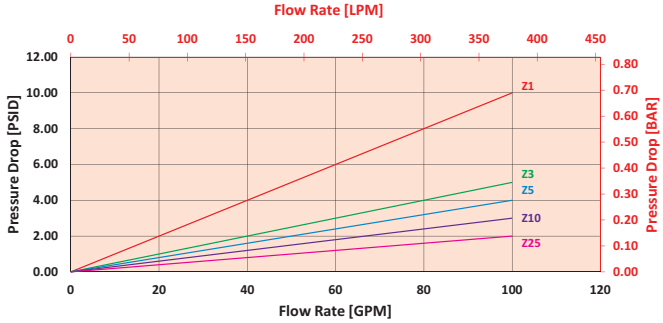

$$\Delta P_{filter} = \Delta P_{housing} + (\Delta P_{element} * V_f)$$

Exercise:

Determine ΔP_{filter} at 70 gpm (265.3 L/min) for KF31KZ10SD5 using 160 SUS (34 cSt) fluid.

Use the housing pressure curve to determine $\Delta P_{housing}$ at 70 gpm. In this case, $\Delta P_{housing}$ is 4 psi (.27 bar) on the graph for the KF3 housing.

Use the element pressure curve to determine $\Delta P_{element}$ at 70 gpm. In this case, $\Delta P_{element}$ is 3 psi (.21 bar) according to the graph for the KZ10 element.

Because the viscosity in this sample is 160 SUS (34 cSt), we determine the Viscosity Factor (V_f) by dividing the Operating Fluid Viscosity with the Standard Viscosity of 150 SUS (32 cSt). To best determine your Operating Fluid Viscosity, please reference the chart in Appendix D.

Finally, the overall filter pressure differential, ΔP_{filter}, is calculated by adding $\Delta P_{housing}$ with the true element pressure differential, ($\Delta P_{element} * V_f$). The $\Delta P_{element}$ from the graph has to be multiplied by the viscosity factor to get the true pressure differential across the element.

Solution:

$\Delta P_{housing}$ = 4 psi [.227 bar] | $\Delta P_{element}$ = 3 psi [.21 bar]

V_f = 160 SUS (34 cSt) / 150 SUS (32 cSt) = 1.1

ΔP_{filter} = 4 psi + (3 psi * 1.1) = 7.7 psi

OR

ΔP_{filter} = .27 bar + (.21 bar * 1.1) = .50 bar

Note:
If your element is not graphed, use the following equation:
$\Delta P_{element}$ = Flow Rate x $\Delta P_{f.}$ Plug this variable into the overall pressure drop equation.

Ele.	ΔP	Ele.	ΔP	Ele.	ΔP
K3	0.25	2K3/ KK3	0.12	3KZ1/ 27KZ1	0.05
K10	0.09	2K10/ KK10	0.05	3KZ3/ 27KZ3	0.03
K25	0.02	2K25/ KK25	0.01	3KZ5/ 27KZ5	0.02
KAS3	0.10	2KAS3/ KKAS3	0.05	3KZ10/ 27KZ10	0.02
KAS5	0.08	2KAS5/ KKAS5	0.04	3KZ25/ 27KZ25	0.01
KAS10	0.05	2KAS10/ KKAS10	0.03	K3K	0.08
KDZ1	0.24	2KDZ1	0.12	3K10	0.03
KDZ3	0.12	2KDZ3	0.06	3K25	0.01
KDZ5	0.10	2KDZ5	0.05	3KAS3/ 27KAS3	0.03
KDZ10	0.06	2KDZ10	0.03	3KAS5/ 27KAS5	0.02
KDZ25	0.04	2KDZ25	0.02	3KAS10/ 27KAS10	0.02
KZW1	0.43	2KZW1	-		
KZW3	0.32	2KZW3/ KKZW3	0.16		
KZW5	0.28	2KZW5/ KKZW5	0.14		
KZW10	0.23	2KZW10/ KKZW10	0.12		
KZW25	0.14	2KZW25/ KKZW25	0.07		

KF3 Return Line Filter

Filter Model Number Selection

Highlighted product eligible for QuickDelivery

How to Build a Valid Model Number for a Schroeder KF3:

BOX 1	BOX 2	BOX 3	BOX 4	BOX 5	BOX 6	BOX 7	BOX 8	BOX 9	BOX 10
KF3 –	–	–	–	–	–	–	–	–	–

Example: NOTE: Only box 10 may contain more than one option

BOX 1	BOX 2	BOX 3	BOX 4	BOX 5	BOX 6	BOX 7	BOX 8	BOX 9	BOX 10
KF3 –	1K –	Z –	10 –	–	–	S –	–	D5 –	= KF31KZ10SD5

BOX 1

Filter Series
KF3
GKF3 (GeoSeal®)
WKF3 (Water)

BOX 2

Number & Size of Elements
1K, KK,27K
2K
3K
GeoSeal®
1KG, KKG,27KG
2KG
3KG

BOX 3

Media Type	
Omit =	E media (cellulose)
AS =	Anti-Static Pleat Media
Z =	Excellement® Z-Media® (synthetic)
ZW =	Aqua-Excellement® ZW media
W =	Water Removal media
M =	M Media (reusable metal)
DZ =	DirtCatcher® Excellement® Z-Media®
	Water System Element Options
KM10 =	K size 25 µ M media (reusable metal)
KM25 =	K size 10 µ M media (reusable metal)
KM60 =	K size 60 µ M media (reusable metal)
KM150 =	K size 150 µ M media (reusable metal)
KM260 =	K size 260 µ M media (reusable metal)

BOX 4

Micron Rating		
1 =	1 µ	(Z, ZW and DZ media)
3 =	3 µ	(E, AS, Z, ZW and DZ media)
5 =	5 µ	(AS, Z, ZW and DZ media)
10 =	10 µ	(E, AS, Z, ZW, M and DZ media)
25 =	25 µ	(E, Z, ZW, M and DZ media)
60 =	60 µ	(M media)

BOX 5

Seal Material	
Omit =	Buna N
H =	EPR
V =	Viton®
H.5 =	Skydrol® Compatibility
W =	Buna N with anodized parts

BOX 6

Magnet Option
Omit = None
M = Magnet

BOX 7

Porting
P = 1½" NPTF
S = SAE-24
F = 1½" SAE-4-bolt flange Code 61
B = ISO 228 G-1½"

BOX 7

Bypass Settings
Omit = 30 psi cracking
40 = 40 psi bypass
50 = 50 psi cracking (req. for HF4)
60 = 60 psi bypass

BOX 9

Dirt Alarm® Options	
	Omit = None
Visual	D = Pointer
	D5 = Visual pop-up
Visual with Thermal Lockout	D8 = Visual w/ thermal lockout
Electrical	MS5 = Electrical w/ 12 in. 18 gauge 4-conductor cable
	MS5LC = Low current MS5
	MS10 = Electrical w/ DIN connector (male end only)
	MS10LC = Low current MS10
	MS11 = Electrical w/ 12 ft. 4-conductor wire
	MS12 = Electrical w/ 5 pin Brad Harrison connector (male end only)
	MS12LC = Low current MS12
	MS16 = Electrical w/ weather-packed sealed connector
	MS16LC = Low current MS16
Electrical with Thermal Lockout	MS17LC = Electrical w/ 4 pin Brad Harrison male connector
	MS5T = MS5 (see above) w/ thermal lockout
	MS5LCT = Low current MS5T
	MS10T = MS10 (see above) w/ thermal lockout
	MS10LCT = Low current MS10T
	MS12T = MS12 (see above) w/ thermal lockout
	MS12LCT = Low current MS12T
	MS16T = MS16 (see above) w/ thermal lockout
	MS16LCT = Low current MS16T
	MS17LCT = Low current MS17T
Electrical Visual	MS = Cam operated switch w/ ½" conduit female connection
	MS13 = Supplied w/ threaded connector & light
	MS14 = Supplied w/ 5 pin Brad Harrison connector & light (male end)
Electrical Visual with Thermal Lockout	MS13DCT = MS13 (see above), direct current, w/ thermal lockout
	MS13DCLCT = Low current MS13DCT
	MS14DCT = MS14 (see above), direct current, w/ thermal lockout
	MS14DCLCT = Low current MS14DCT

BOX 10

Additional Options	
Omit =	None
L =	Two ¼" NPTF inlet and outlet test ports
N =	No-Element indicator
G426 =	¾" drain on bottom of housing
G440 =	½" drain on bottom of housing

NOTES:

Box 2. Double and triple stacking of K-size elements can be replaced by single KK and 27K elements, respectively. Number of elements must equal 1 when using KK or 27K elements. ZW media not available in 27K.

Box 3. Replacement element part numbers are identical to contents of Boxes 2, 3, 4, and 5.

Box 5. For options H, W, V, and H.5, all aluminum parts are anodized. H.5 seal designation includes the following: EPR seals, stainless steel wire mesh on elements, and light oil coating on housing exterior. Viton® is a registered trademark of DuPont Dow Elastomers. Skydrol® is a registered trademark of Solutia Inc.

Box 7. For option F, bolt thread depth .63" (16 mm). B porting option supplied with metric mounting holes.

Box 10. Option L not available with MS Dirt Alarm

Return Line Filter with Threaded Bowl

KL3

Model No. of filter in photograph is KL31KZ10F24.

Features and Benefits

- Threaded bowl allows for easier removal and facilitates element changes
- Available with 18LC and K-size elements
- Available with 1½" and 2" porting
- Offered in pipe, SAE straight thread, ISO 228, and flange porting
- Various Dirt Alarm® options
- Available with NPTF inlet and outlet female test ports
- Available with housing drain plug
- G Available with quality-protected GeoSeal® Elements (GKL3)

120 gpm
455 L/min
300 psi
20 bar

Filter Housing Specifications

Flow Rating:	Up to 100 gpm (380 L/min) for 150 SUS (32 cSt) fluids for P24, S24, F24 and B24 porting Up to 120 gpm (455 L/min) for 150 SUS (32 cSt) fluids for P32, S32 and B32 porting
Max. Operating Pressure:	300 psi (20 bar)
Min. Yield Pressure:	1000 psi (70 bar), per NFPA T2.6.1
Rated Fatigue Pressure:	300 psi (20 bar), per NFPA T2.6.1-2005
Temp. Range:	-20°F to 225°F (-29°C to 107°C)
Bypass Setting:	Cracking: 30 psi (2 bar) Full Flow: 68 psi (4.7 bar)
Porting Head: Element Case:	Cast Aluminum Steel
Weight of KL3-18LC: Weight of KL3-1K: Weight of KL3-2K: Weight of KL3-3K:	20.00 lbs. (9.1 kg) 14.75 lbs. (6.7 kg) 18.50 lbs. (8.4 kg) 22.75 lbs. (10.3 kg)
Element Change Clearance:	2.50" (64 mm)

Fluid Compatibility

Type Fluid	Appropriate Schroeder Media
Petroleum Based Fluids	All E media (cellulose), Z-Media® and ASP® media (synthetic)
High Water Content	All Z-Media® and ASP® media (synthetic)
Invert Emulsions	10 and 25 µ Z-Media® (synthetic), 10 µ ASP® media (synthetic)
Water Glycols	3, 5, 10 and 25 µ Z-Media® (synthetic), 3, 5, and 10 µ ASP® media (synthetic)
Phosphate Esters	All Z-Media® with H (EPR) seal designation and all ASP® media (synthetic)

KL3 Return Line Filter with Threaded Bowl

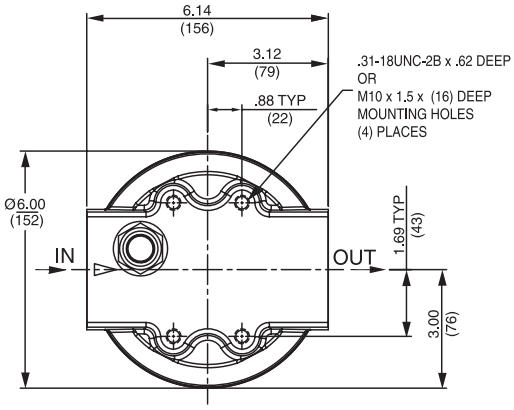

VIEW A-A

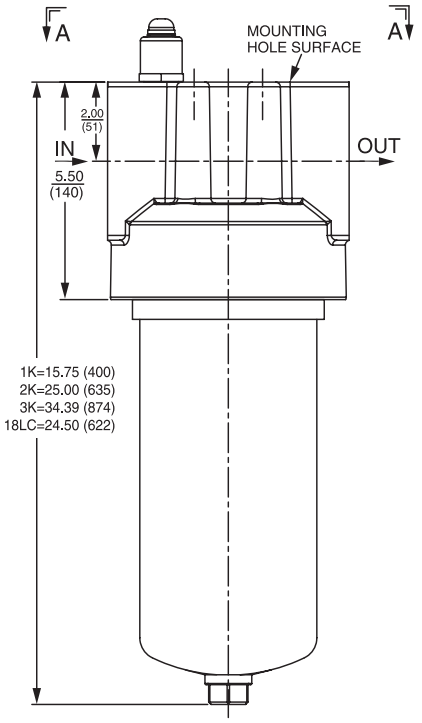

Metric dimensions in ( ).

Element Performance Information & Dirt Holding Capacity

Element	Filtration Ratio Per ISO 4572/NFPA T3.10.8.8 Using automated particle counter (APC) calibrated per ISO 4402			Filtration Ratio per ISO 16889 Using APC calibrated per ISO 11171	
	$ß_x \geq 75$	$ß_x \geq 100$	$ß_x \geq 200$	$ß_x(c) \geq 200$	$ß_x(c) \geq 1000$
KZ1/KKZ1/27KZ1	<1.0	<1.0	<1.0	<4.0	4.2
KZ3/KKZ3/27KZ3	<1.0	<1.0	<2.0	<4.0	4.8
KZ5/KKZ5/27KZ5	2.5	3.0	4.0	4.8	6.3
KZ10/KKZ10/27KZ10	7.4	8.2	10.0	8.0	10.0
KZ25/KKZ25/27KZ25	18.0	20.0	22.5	19.0	24.0
KZW1	N/A	N/A	N/A	<4.0	<4.0
KZW3/KKZW3	N/A	N/A	N/A	4.0	4.8
KZW5/KKZW5	N/A	N/A	N/A	5.1	6.4
KZW10/KKZW10	N/A	N/A	N/A	6.9	8.6
KZW25/KKZW25	N/A	N/A	N/A	15.4	18.5
18LCZ1	<1.0	<1.0	<1.0	<4.0	4.2
18LCZ3	<1.0	<1.0	<2.0	<4.0	4.8
18LCZ5	2.5	3.0	4.0	4.8	6.3
18LCZ10	7.4	8.2	10.0	8.0	10.0
18LCZ25	18.0	20.0	22.5	19.0	24.0

Element	DHC (g)	Element	DHC (g)	Element	DHC (g)	Element	DHC (g)	Element	DHC (g)	Element	DHC (g)
KZ1	112	KKZ1	224	27KZ1	336	KZW1	61			18LCZ1	224
KZ3	115	KKZ3	230	27KZ3	345	KZW3	64	KKZW3	128	18LCZ3	230
KZ5	119	KKZ5	238	27KZ5	357	KZW5	63	KKZW5	126	18LCZ5	238
KZ10	108	KKZ10	216	27KZ10	324	KZW10	57	KKZW10	114	18LCZ10	216
KZ25	93	KKZ25	186	27KZ25	279	KZW25	79	KKZW25	158	18LCZ25	186

Element Collapse Rating: 150 psid (10 bar) for standard elements

Flow Direction: Outside In

Element Nominal Dimensions:
- K: 3.9" (99 mm) O.D. x 9.0" (230 mm) long
- KK: 3.9" (99 mm) O.D. x 18.0" (460 mm) long
- 27K: 3.9" (99 mm) O.D. x 27.0" (690 mm) long
- 18LC: 4.0" (100 mm) O.D. x 18.5" (470 mm) long

Pressure Drop Information

Based on Flow Rate and Viscosity

$\Delta P_{housing}$

KL3 $\Delta P_{housing}$ for fluids with sp gr (specific gravity) = 0.86:

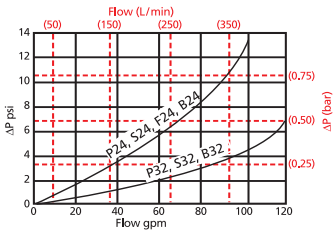

$\Delta P_{element}$

KZ

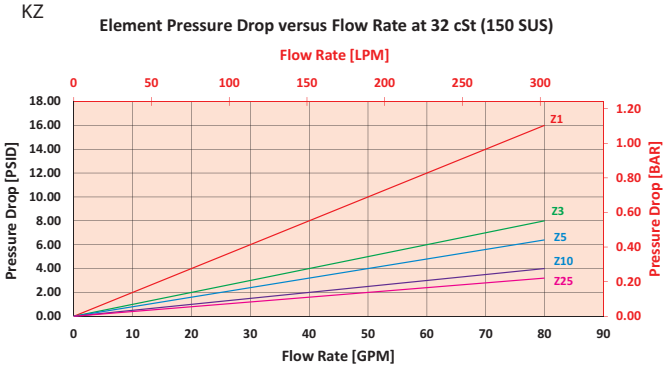

2KZ/KKZ

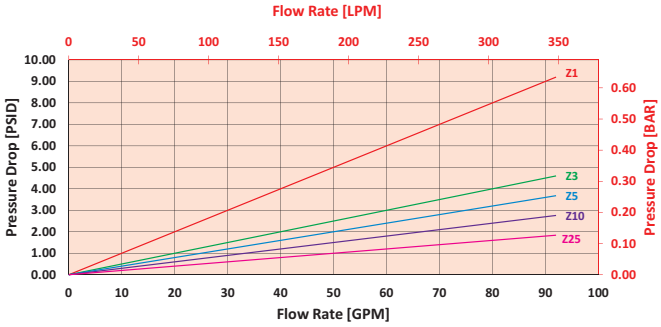

$$\Delta P_{filter} = \Delta P_{housing} + (\Delta P_{element} * V_f)$$

Exercise:

Determine ΔP_{filter} at 70 gpm (265.3 L/min) for KL31KZ10P24D5L using 160 SUS (34 cSt) fluid.

Use the housing pressure curve to determine $\Delta P_{housing}$ at 70 gpm. In this case, $\Delta P_{housing}$ is 7 psi (.48 bar) on the graph for the KL3 housing.

Use the element pressure curve to determine $\Delta P_{element}$ at 70 gpm. In this case, $\Delta P_{element}$ is 3 psi (.21 bar) according to the graph for the KZ10 element.

Because the viscosity in this sample is 160 SUS (34 cSt), we determine the Viscosity Factor (V_f) by dividing the Operating Fluid Viscosity with the Standard Viscosity of 150 SUS (32 cSt). To best determine your Operating Fluid Viscosity, please reference the chart in Appendix D.

Finally, the overall filter pressure differential, ΔP_{filter}, is calculated by adding $\Delta P_{housing}$ with the true element pressure differential, ($\Delta P_{element}$*V_f). The $\Delta P_{element}$ from the graph has to be multiplied by the viscosity factor to get the true pressure differential across the element.

Solution:

$\Delta P_{housing}$ = 7 psi [.48 bar] | $\Delta P_{element}$ = 3 psi [.21 bar]

V_f = 160 SUS (34 cSt) / 150 SUS (32 cSt) = 1.1

ΔP_{filter} = 7 psi + (3 psi * 1.1) = 10.7 psi

OR

ΔP_{filter} = .48 bar + (.21 bar * 1.1) = .71 bar

Note:
If your element is not graphed, use the following equation:
$\Delta P_{element}$ = Flow Rate x ΔP_f Plug this variable into the overall pressure drop equation.

Ele.	ΔP	Ele.	ΔP	Ele.	ΔP
K3	0.25	2K3/ KK3	0.12	18LC3	0.12
K10	0.09	2K10/ KK10	0.05	18L10	0.05
K25	0.02	2K25/ KK25	0.01	18LCZ1	0.10
KAS3	0.10	2KAS3/ KKAS3	0.05	18LCZ3	0.05
KAS5	0.08	2KAS5/ KKAS5	0.04	18LCZ5	0.04
KAS10	0.05	2KAS10/ KKAS10	0.03	18LCZ10	0.03
KZW1	0.43	2KZW1	-	18LCZ25	0.02
KZW3	0.32	2KZW3/ KKZW3	0.16		
KZW5	0.28	2KZW5/ KKZW5	0.14		
KZW10	0.23	2KZW10/ KKZW10	0.12		
KZW25	0.14	2KZW25/ KKZW25	0.07		

KL3 Return Line Filter with Threaded Bowl

Filter Model Number Selection

How to Build a Valid Model Number for a Schroeder KL3:

BOX 1	BOX 2	BOX 3	BOX 4	BOX 5	BOX 6	BOX 7	BOX 8	BOX 9	BOX 10
KL3 –	–	–	–	–	–	–	–		

Example: Option 1 NOTE: One option per box

1	2	3	4	5	6	7	8	9	10
KL3 –	18LC –	Z –	1 –	H –	P24 –	–	D5 –	L –	

Option 2 NOTE: One option per box

1	2	3	4	5	6	7	8	9	10
KL3 –	2K –	Z –	1 –	–	P24 –	–	D5 –	L –	

BOX 1 — Filter Series

- KL3
- GKL3 (GeoSeal®)
- WKL3 (Water)

BOX 2 Option 1 — Size

- 18LC

BOX 3 Option 1 — Media Type

- Omit = E media (cellulose)
- Z = Excellement® Z-Media® (synthetic)

Water System Element Option

- KM10 = 10 µ M media (reusable metal)
- KM25 = 25 µ M media (reusable metal)
- KM60 = 60 µ M media (reusable metal)
- KM150 = 150 µ M media (reusable metal)
- KM260 = 260 µ M media (reusable metal)

BOX 4 Option 1 — Micron Rating

- 1 = 1 µ (Z-Media®)
- 3 = 3 µ (E and Z-Media®)
- 5 = 5 µ (Z-Media®)
- 10 = 10 µ (E and Z-Media®)
- 25 = 25 µ (E and Z-Media®)

BOX 2 Option 2 — Number & Size of Elements

- 1K, KK,27K
- 2K
- 3K

BOX 3 Option 2 — Media Type

- Omit = E media (cellulose)
- Z = Excellement® Z-Media® (synthetic)
- AS = Anti-Static Pleat Media (synthetic)
- ZW = Aqua-Excellement® ZW media
- W = Water Removal media
- M = M media (reusable metal)
- DZ = DirtCatcher® Excellement® Z-Media®

BOX 4 Option 2 — Micron Rating

- 1 = 1 µ (Z, ZW and DZ media)
- 3 = 3 µ (E, AS, Z, ZW and DZ media)
- 5 = 5 µ (AS, Z, ZW and DZ media)
- 10 = 10 µ (E, AS, Z, ZW, M and DZ media)
- 25 = 25 µ (E, Z, ZW, M and DZ media)
- 60 = 60 µ (M media)

BOX 5 — Seal Material

- Omit = Buna N
- H = EPR
- V = Viton®
- H.5 = Skydrol® Compatibility
- W = Buna N

BOX 6 — Porting

- P24 = 1½" NPTF
- S24 = SAE-24
- F24 = 1½" SAE 4-bolt flange Code 61
- B24 = ISO 228 G-1½"
- P32 = 2" NPTF
- S32 = SAE-32
- B32 = SO 228 G-2"

BOX 7 — Bypass Setting

- Omit = 30 psi cracking
- 40 = 40 PSI Bypass
- 50 = 50 psi cracking (req. for HF4)

BOX 8 — Dirt Alarm® Options

	Omit =	None
Visual	D5 =	Visual pop-up
Visual with Thermal Lockout	D8 =	Visual w/ thermal lockout
Electrical	MS5 =	Electrical w/ 12 in. 18 gauge 4-conductor cable
	MS5LC =	Low current MS5
	MS10 =	Electrical w/ DIN connector (male end only)
	MS10LC =	Low current MS10
	MS11 =	Electrical w/ 12 ft. 4-conductor wire
	MS12 =	Electrical w/ 5 pin Brad Harrison connector (male end only)
	MS12LC =	Low current MS12
	MS16 =	Electrical w/ weather-packed sealed connector
	MS16LC =	Low current MS16
	MS17LC =	Electrical w/ 4 pin Brad Harrison male connector
Electrical with Thermal Lockout	MS5T =	MS5 (see above) w/ thermal lockout
	MS5LCT =	Low current MS5T
	MS10T =	MS10 (see above) w/ thermal lockout
	MS10LCT =	Low current MS10T
	MS12T =	MS12 (see above) w/ thermal lockout
	MS12LCT =	Low current MS12T
	MS16T =	MS16 (see above) w/ thermal lockout
	MS16LCT =	Low current MS16T
	MS17LCT =	Low current MS17T
Electrical Visual	MS13 =	Supplied w/ threaded connector & light
	MS14 =	Supplied w/ 5 pin Brad Harrison connector & light (male end)
Electrical Visual with Thermal Lockout	MS13DCT =	MS13 (see above), direct current, w/ thermal lockout
	MS13DCLCT =	Low current MS13DCT
	MS14DCT =	MS14 (see above), direct current, w/ thermal lockout
	MS14DCLCT =	Low current MS14DCT

BOX 9 — Test Port Options

- Omit = None
- L = Two ¼" NPTF inlet and outlet female test ports

BOX 10 — Bowl Drain Option

- Omit = None
- DR = ⅜" drain on bottom of housing

NOTES:

Box 2. Double and triple stacking of K-size elements can be replaced by single KK and 27K elements, respectively. Number of elements must equal 1 when using KK or 27K elements. Replacement element part numbers are identical to contents of Boxes 2, 3, 4, and 5. ZW media not available in 27K length.
Example: 18LCZ3V

Box 5. For options H, W, V, and H.5, all aluminum parts are anodized.H.5 seal designation includes the following: EPR seals, stainless steel wire mesh on elements, and light oil coating on housing exterior. Viton® is a registered trademark of DuPont Dow Elastomers. Skydrol® is a registered trademark of Solutia Inc.

Box 6. B24 and B32 porting options supplied with metric mounting holes. 18LC elements require 2" ports for up to 120 gpm. K size elements require 1½" ports for up to 100 gpm.

Return Line Filter with 2" Ports

LF1

Model No. of filter in photograph is LF118LCZ10P32D.

Features and Benefits

- Offered in pipe, SAE straight thread and ISO 228 porting
- Available in 18" element lengths only
- Various Dirt Alarm® options
- Available with NPTF inlet and outlet female test ports
- Available with 2" porting with "K" size element
- Available with housing drain plug

120 gpm
455 L/min
300 psi
20 bar

Filter Housing Specifications

Flow Rating:	Up to 120 gpm (455 L/min) for 150 SUS (32 cSt) fluids
Max. Operating Pressure:	300 psi (20 bar)
Min. Yield Pressure:	1000 psi (70 bar), per NFPA T2.6.1
Rated Fatigue Pressure:	250 psi (17 bar), per NFPA T2.6.1-2005
Temp. Range:	-20°F to 225°F (-29°C to 107°C)
Bypass Setting:	Cracking: 30 psi (2.1 bar) Full Flow: 60 psi (4.1 bar)
Porting Head: Element Case:	Cast Aluminum Steel
Available Porting:	2" NPTF, 2½-12 SAE Straight
Weight of LF1-18LC:	17.5 lbs. (7.9 kg)
Element Change Clearance:	2.0" (55 mm)

Fluid Compatibility

Type Fluid	Appropriate Schroeder Media
Petroleum Based Fluids	All E media (cellulose) and Z-Media® (synthetic)
High Water Content	All Z-Media (synthetic)
Invert Emulsions	10 and 25 µ Z-Media® (synthetic)
Water Glycols	3, 5, 10 and 25 µ Z-Media® (synthetic)
Phosphate Esters	All Z-Media® (synthetic) with H (EPR) seal designation
Skydrol®	3, 5, 10 and 25 µ Z-Media® (synthetic) with H.5 seal designation (EPR seals and stainless steel wire mesh in element, and light oil coating on housing exterior)

LF1 Return Line Filter with 2" Ports

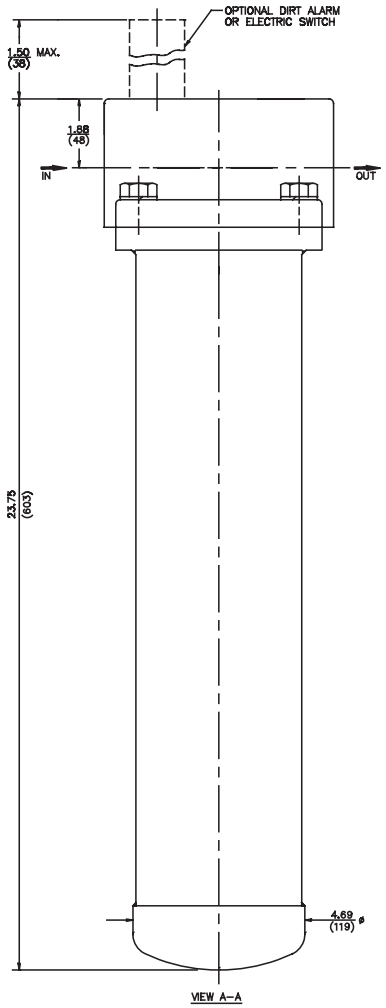

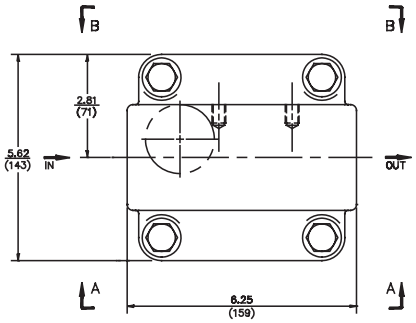

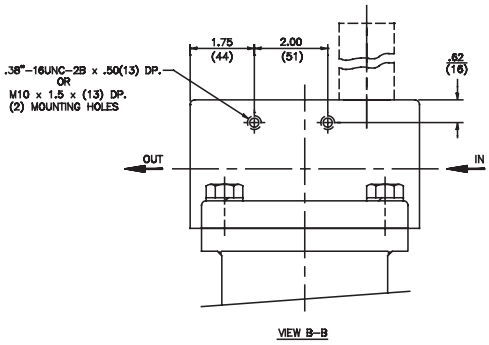

Element Performance Information & Dirt Holding Capacity

Metric dimensions in ( ).

Element	Filtration Ratio Per ISO 4572/NFPA T3.10.8.8 Using automated particle counter (APC) calibrated per ISO 4402			Filtration Ratio per ISO 16889 Using APC calibrated per ISO 11171	
	$ß_x \geq 75$	$ß_x \geq 100$	$ß_x \geq 200$	$ß_x(c) \geq 200$	$ß_x(c) \geq 1000$
18LCZ1	<1.0	<1.0	<1.0	<4.0	4.2
18LCZ3	<1.0	<1.0	<2.0	<4.0	4.8
18LCZ5	2.5	3.0	4.0	4.8	6.3
18LCZ10	7.4	8.2	10.0	8.0	10.0
18LCZ25	18.0	20.0	22.5	19.0	24.0

Element	DHC (gm)
18LCZ1	224
18LCZ3	230
18LCZ5	238
18LCZ10	216
18LCZ25	186

Element Collapse Rating: 150 psid (10 bar)

Flow Direction: Outside In

Element Nominal Dimensions: 4.0" (100 mm) O.D. x 18.5" (470 mm) long

$\Delta P_{housing}$

LF1-2" $\Delta P_{housing}$ for fluids with sp gr (specific gravity) = 0.86:

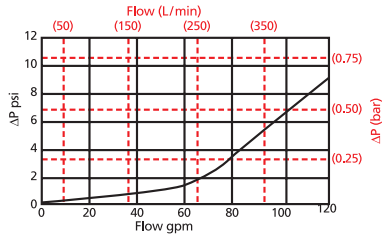

$\Delta P_{element}$

18LCZ

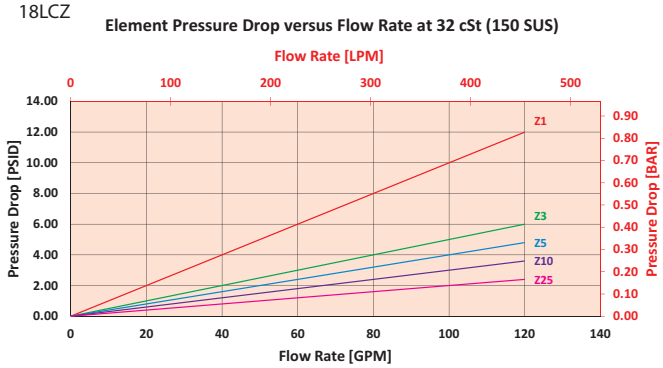

$$\Delta P_{filter} = \Delta P_{housing} + (\Delta P_{element} * V_f)$$

Exercise:

Determine ΔP_{filter} at 70 gpm (265.3 L/min) for LF118LCZ3P32D5 using 160 SUS (34 cSt) fluid.

Use the housing pressure curve to determine $\Delta P_{housing}$ at 70 gpm. In this case, $\Delta P_{housing}$ is 2 psi (.14 bar) on the graph for the LF1 housing.

Use the element pressure curve to determine $\Delta P_{element}$ at 70 gpm. In this case, $\Delta P_{element}$ is 3.5 psi (.24 bar) according to the graph for the 18LCZ3 element.

Because the viscosity in this sample is 160 SUS (34 cSt), we determine the Viscosity Factor (V_f) by dividing the Operating Fluid Viscosity with the Standard Viscosity of 150 SUS (32 cSt). To best determine your Operating Fluid Viscosity, please reference the chart in Appendix D.

Finally, the overall filter pressure differential, ΔP_{filter}, is calculated by adding $\Delta P_{housing}$ with the true element pressure differential, ($\Delta P_{element}$*V_f). The $\Delta P_{element}$ from the graph has to be multiplied by the viscosity factor to get the true pressure differential across the element.

Solution:

$\Delta P_{housing}$ = 2 psi [.14 bar] | $\Delta P_{element}$ = 3.5 psi [.24 bar]

V_f = 160 SUS (34 cSt) / 150 SUS (32 cSt) = 1.1

ΔP_{filter} = 2 psi + (3.5 psi * 1.1) = 5.9 psi

OR

ΔP_{filter} = .14 bar + (.24 bar * 1.1) = .40 bar

LF1 Return Line Filter with 2" Ports

Filter Model Number Selection

How to Build a Valid Model Number for a Schroeder LF1:

BOX 1	BOX 2	BOX 3	BOX 4	BOX 5	BOX 6	BOX 7	BOX 8
LF1 –	–	–	–	–	–	–	–

Example: NOTE: Only box 8 may contain more than one option

BOX 1	BOX 2	BOX 3	BOX 4	BOX 5	BOX 6	BOX 7	BOX 8	
LF1 –	18 –	LC3 –	–	P32 –	–	D5 –	–	= LF118LC3P32D5

BOX 1

Filter Series
LF1
WLF1 (Water)

BOX 2

Length of Element (in)
18

BOX 3

Element Size and Media	
LC3	= LC size 3 µ E media (cellulose)
LC10	= LC size 10 µ E media (cellulose)
LCZ1	= LC size 1 µ Excellement® Z-Media™ (synthetic)
LCZ3	= LC size 3 µ Excellement Z-Media (synthetic)
LCZ5	= LC size 5 µ Excellement Z-Media (synthetic)
LCZ10	= LC size 10 µ Excellement Z-Media (synthetic)
LCZ25	= LC size 25 µ Excellement Z-Media (synthetic)

BOX 4

Seal Material	
Omit	= Buna N
H	= EPR
V	= Viton®
H.5	= Skydrol® Compatibility

BOX 5

Porting	
P32	= 2" NPTF
S32	= SAE-32
B32	= ISO 228 G-2"

BOX 6

Bypass	
Omit	= 30 PSI Bypass
50	= 50 PSI Bypass

BOX 7

Dirt Alarm® Options		
	Omit	= None
Visual	D	= Pointer
	D5	= Visual pop-up
Visual with Thermal Lockout	D8	= Visual w/ thermal lockout
Electrical	MS5	= Electrical w/ 12 in. 18 gauge 4-conductor cable
	MS5LC	= Low current MS5
	MS10	= Electrical w/ DIN connector (male end only)
	MS10LC	= Low current MS10
	MS11	= Electrical w/ 12 ft. 4-conductor wire
	MS12	= Electrical w/ 5 pin Brad Harrison connector (male end only)
	MS12LC	= Low current MS12
	MS16	= Electrical w/ weather-packed sealed connector
	MS16LC	= Low current MS16
	MS17LC	= Electrical w/ 4 pin Brad Harrison male connector
Electrical with Thermal Lockout	MS5T	= MS5 (see above) w/ thermal lockout
	MS5LCT	= Low current MS5T
	MS10T	= MS10 (see above) w/ thermal lockout
	MS10LCT	= Low current MS10T
	MS12T	= MS12 (see above) w/ thermal lockout
	MS12LCT	= Low current MS12T
	MS16T	= MS16 (see above) w/ thermal lockout
	MS16LCT	= Low current MS16T
	MS17LCT	= Low current MS17T
Electrical Visual	MS	= Cam operated switch w/ ½" conduit female connection
	MS13	= Supplied w/ threaded connector & light
	MS14	= Supplied w/ 5 pin Brad Harrison connector & light (male end)
Electrical Visual with Thermal Lockout	MS13DCT	= MS13 (see above), direct current, w/ thermal lockout
	MS13DCLCT	= Low current MS13DCT
	MS14DCT	= MS14 (see above), direct current, w/ thermal lockout
	MS14DCLCT	= Low current MS14DCT

BOX 8

Additional Options	
Omit	= None
L	= Two ¼" NPTF inlet and outlet female test ports
G426	= ¾" drain on bottom of housing
G440	= ½" drain on bottom of housing

NOTES:

Box 2. Replacement element part numbers are a combination of Boxes 2, 3, and 4. Example: 18LCZ3V

Box 4. For options H, V, and H.5, all aluminum parts are anodized. H.5 seal designation includes the following: EPR seals, stainless steel wire mesh on elements, and light oil coating on housing exterior. Viton® is a registered trademark of DuPont Dow Elastomers. Skydrol® is a registered trademark of Solutia Inc.

Box 5. B porting option supplied with metric mounting holes.

Top-Ported Return Line Filter MLF1

Model No. of filter in photograph is MLF14K10PD.

Features and wBenefits

- Equipped with inlet and outlet manifolds
- Meets HF4 automotive standard
- Offered in pipe and flange porting
- Available in 2, 4 or 6 element configurations
- Various Dirt Alarm® options
- Available with NPTF inlet and outlet female test ports
- Available with housing drain plugs
- G Available with quality-protected GeoSeal® Elements (GMLF1)

200 gpm
760 L/min
300 psi
20 bar

Filter Housing Specifications

Flow Rating:	Up to 200 gpm (760 L/min) for 150 SUS (32 cSt) fluids
Max. Operating Pressure:	300 psi (20 bar)
Min. Yield Pressure:	1000 psi (70 bar), per NFPA T2.6.1
Rated Fatigue Pressure:	250 psi (17 bar), per NFPA T2.6.1-2005
Temp. Range:	-20°F to 225°F (-29°C to 107°C)
Bypass Setting:	Cracking: 25 psi (2 bar) Full Flow: 60 psi (4 bar)
Porting Head: Element Case:	Anodized Cast Aluminum Steel
Weight of MLF1-2K: Weight of MLF1-4K: Weight of MLF1-6K:	44.0 lbs. (20.0 kg) 50.0 lbs. (23.0 kg) 58.0 lbs. (26.0 kg)
Element Change Clearance:	2.0" (55 mm)

Fluid Compatibility

Type Fluid	Appropriate Schroeder Media
Petroleum Based Fluids	All E media (cellulose), Z-Media® and ASP® media (synthetic)
High Water Content	All Z-Media® (synthetic)
Invert Emulsions	10 and 25 µ Z-Media® (synthetic)
Water Glycols	3, 5, 10 and 25 µ Z-Media® (synthetic)
Phosphate Esters	All Z-Media® (synthetic) with H (EPR) seal designation and 3 and 10 µ E media (cellulose) with H (EPR) seal designation and all ASP® media (synthetic)
Skydrol®	3, 5, 10 and 25 µ Z-Media® (synthetic) with H.5 seal designation (EPR seals and stainless steel wire mesh in element, and light oil coating on housing exterior and all ASP® media (synthetic).

MLF1 Top-Ported Return Line Filter

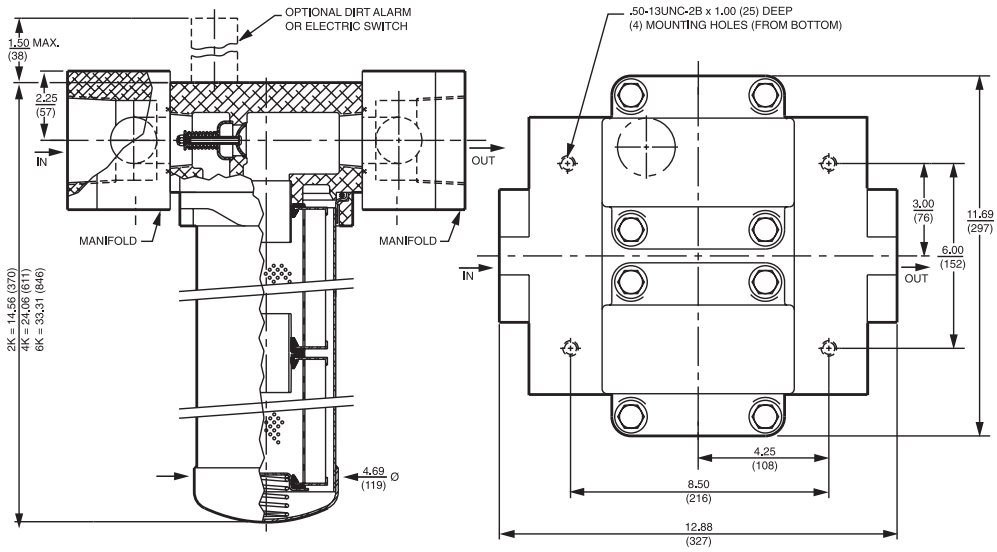

Metric dimensions in ( ).

Element Performance Information & Dirt Holding Capacity

Element	Filtration Ratio Per ISO 4572/NFPA T3.10.8.8 Using automated particle counter (APC) calibrated per ISO 4402			Filtration Ratio per ISO 16889 Using APC calibrated per ISO 11171	
	$ß_x \geq 75$	$ß_x \geq 100$	$ß_x \geq 200$	$ß_{x(c)} \geq 200$	$ß_{x(c)} \geq 1000$
KZ1	<1.0	<1.0	<1.0	<4.0	4.2
KZ3	<1.0	<1.0	<2.0	<4.0	4.8
KZ5	2.5	3.0	4.0	4.8	6.3
KZ10	7.4	8.2	10.0	8.0	10.0
KZ25	18.0	20.0	22.5	19.0	24.0
KZW3	N/A	N/A	N/A	<4.0	4.8
KZW5	N/A	N/A	N/A	5.1	6.4
KZW10	N/A	N/A	N/A	6.9	8.6
KZW25	N/A	N/A	N/A	15.4	18.5

Element	DHC (gm)	Element	DHC (gm)	Element	DHC (gm)	Element	DHC (gm)
2KZ1	224	4KZ1	448	6KZ1	672		
2KZ3	230	4KZ3	460	6KZ3	690	KZW3	64
2KZ5	238	4KZ5	476	6KZ5	714	KZW5	63
2KZ10	216	4KZ10	432	6KZ1	648	KZW10	67
2KZ25	186	4KZ25	372	6KZ25	558	KZW25	79

Element Collapse Rating: 150 psid (10 bar) for standard elements

Flow Direction: Outside In

Element Nominal Dimensions:
K: 3.9" (99 mm) O.D. x 9.0" (230 mm) long
KK: 3.9" (99 mm) O.D. x 18.0" (460 mm) long
27K: 3.9" (99 mm) O.D. x 27.0" (690 mm) long

Pressure Drop Information

Based on Flow Rate and Viscosity

$\Delta P_{housing}$

MLF1 $\Delta P_{housing}$ for fluids with sp gr (specific gravity) = 0.86:

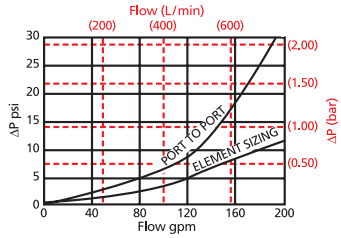

$\Delta P_{element}$

4KZ/2KKZ

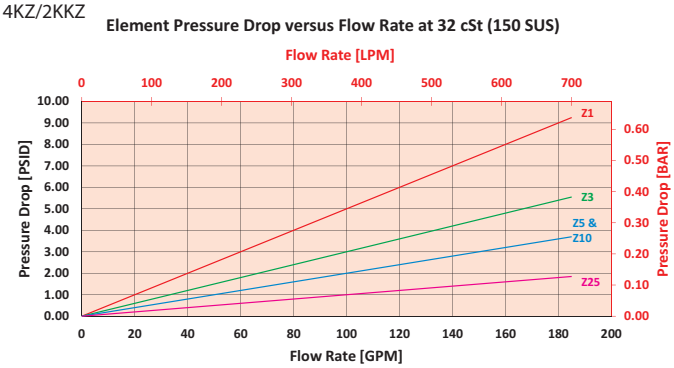

6KZ/2-27KZ

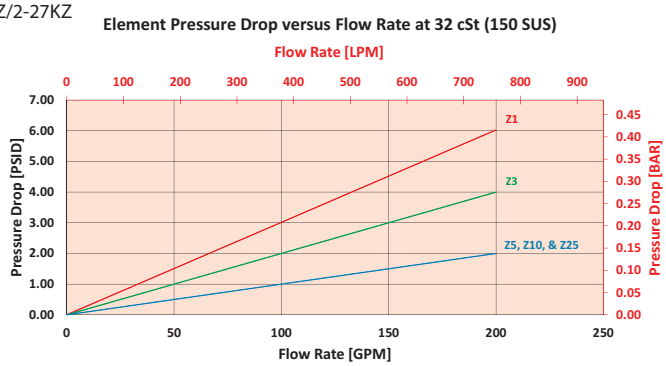

$$\Delta P_{filter} = \Delta P_{housing} + (\Delta P_{element} * V_f)$$

Exercise:

Determine ΔP_{filter} at 150 gpm (568.5 L/min) for MLF14K10PD using 160 SUS (34 cSt) fluid.

Use the housing pressure curve to determine $\Delta P_{housing}$ at 150 gpm. In this case, $\Delta P_{housing}$ is 15 psi (1 bar) on the graph for the MLF1 housing.

Use the element pressure curve to determine $\Delta P_{element}$ at 150 gpm. In this case, $\Delta P_{element}$ is 3 psi (.21 bar) according to the graph for the KKZ10 element.

Because the viscosity in this sample is 160 SUS (34 cSt), we determine the Viscosity Factor (V_f) by dividing the Operating Fluid Viscosity with the Standard Viscosity of 150 SUS (32 cSt). To best determine your Operating Fluid Viscosity, please reference the chart in Appendix D.

Finally, the overall filter pressure differential, ΔP_{filter}, is calculated by adding $\Delta P_{housing}$ with the true element pressure differential, ($\Delta P_{element} * V_f$). The $\Delta P_{element}$ from the graph has to be multiplied by the viscosity factor to get the true pressure differential across the element.

Solution:

$\Delta P_{housing}$ = 15 psi [1 bar] | $\Delta P_{element}$ = 3 psi [.21 bar]

V_f = 160 SUS (34 cSt) / 150 SUS (32 cSt) = 1.1

ΔP_{filter} = 15 psi + (3 psi * 1.1) = 18.3 psi

OR

ΔP_{filter} = 1 bar + (.21 bar * 1.1) = 1.2 bar

Note:
If your element is not graphed, use the following equation:
$\Delta P_{element}$ = Flow Rate x $\Delta P_{f.}$ Plug this variable into the overall pressure drop equation.

Ele.	ΔP	Ele.	ΔP	Ele.	ΔP
2KZ1	0.10	2K3	0.12	4K3/ KK3	0.06
2KZ3	0.05	2K10	0.05	4K10/ KK10	0.02
2KZ5	0.04	2K25	0.01	4K25/ KK25	0.01
2KZ10	0.03	2KAS3	0.05	4KAS3/ KKAS3	0.03
2KZ25	0.02	2KAS5	0.04	4KAS5/ KKAS5	0.02
KZW3	0.32	2KAS10	0.03	4KAS10/ KKAS10	0.02
KZW5	0.28	2KZW3/ KKZW3	0.16	6KAS3/ 27KAS3	0.02
KZW10	0.23	2KZW5/ KKZW5	0.14	6KAS5/ 27KAS5	0.01
KZW25	0.14			6KAS10/ 27KAS10	0.01

MLF1 Top-Ported Return Line Filter

Filter Model Number Selection

How to Build a Valid Model Number for a Schroeder MLF1:

BOX 1	BOX 2	BOX 3	BOX 4	BOX 5	BOX 6	BOX 7	BOX 8	BOX 9	BOX 10
MLF1 –	–	–	–	–	–	–	–	–	–

Example: NOTE: Only box 10 may contain more than one option

BOX 1	BOX 2	BOX 3	BOX 4	BOX 5	BOX 6	BOX 7	BOX 8	BOX 9	BOX 10	
MLF1 –	2K –	–	10 –	–	–	P –	–	D5 –		= MLF12K10PD5

BOX 1

Filter Series
MLF1
GMLF1 (GeoSeal®)

BOX 2

Number & Size of Elements
2K, KK, 27K
4 K
6 K
GeoSeal®
2KG, KKG, 27KG
4 KG
6 KG

BOX 3

Media Type
Omit = E media (cellulose)
Z = Excellement® Z-Media® (synthetic)
AS = Anti-Static Pleat Media (synthetic)
ZW = Aqua-Excellement™ ZW media
DZ = DirtCatcher® with Excellement® Z-Media®
W = W media (water removal)
M = M media (reusable metal mesh)

BOX 4

Micron Rating
1 = 1 µ Z, ZW, and DZ media
3 = 3 µ AS,E, Z, ZW, and DZ media
5 = 5 µ AS, Z, ZW, DZ media
10 = 10 µ AS, E, M, Z, ZW, & DZ media
25 = 25 µ E, M, Z, ZW and DZ media
60 = 60 µ M media
150 = 150 µ M media

BOX 5

Seal Material
Omit = Buna N
H = EPR
V = Viton®
H.5 = Skydrol® Compatibility

BOX 6

Magnet Option
Omit = None
M = Magnet inserts

BOX 7

Porting
P = 2½" NPTF
F = 2½" SAE 4-bolt flange Code 61

BOX 8

Bypass
Omit = 25 PSI Bypass
50 = 50 PSI Bypass

BOX 9

Dirt Alarm® Options		
	Omit =	None
Visual	D =	Pointer
	D5 =	Visual pop-up
Visual with Thermal Lockout	D8 =	Visual w/ thermal lockout
Electrical	MS5 =	Electrical w/ 12 in. 18 gauge 4-conductor cable
	MS5LC =	Low current MS5
	MS10 =	Electrical w/ DIN connector (male end only)
	MS10LC =	Low current MS10
	MS11 =	Electrical w/ 12 ft. 4-conductor wire
	MS12 =	Electrical w/ 5 pin Brad Harrison connector (male end only)
	MS12LC =	Low current MS12
	MS16 =	Electrical w/ weather-packed sealed connector
	MS16LC =	Low current MS16
	MS17LC =	Electrical w/ 4 pin Brad Harrison male connector
Electrical with Thermal Lockout	MS5T =	MS5 (see above) w/ thermal lockout
	MS5LCT =	Low current MS5T
	MS10T =	MS10 (see above) w/ thermal lockout
	MS10LCT =	Low current MS10T
	MS12T =	MS12 (see above) w/ thermal lockout
	MS12LCT =	Low current MS12T
	MS16T =	MS16 (see above) w/ thermal lockout
	MS16LCT =	Low current MS16T
	MS17LCT =	Low current MS17T
Electrical Visual	MS =	Cam operated switch w/ ½" conduit female connection
	MS13 =	Supplied w/ threaded connector & light
	MS14 =	Supplied w/ 5 pin Brad Harrison connector & light (male end)
Electrical Visual with Thermal Lockout	MS13DCT =	MS13 (see above), direct current, w/ thermal lockout
	MS13DCLCT =	Low current MS13DCT
	MS14DCT =	MS14 (see above), direct current, w/ thermal lockout
	MS14DCLCT =	Low current MS14DCT

BOX 10

Additional Options
Omit = None
L = Two ¼" NPTF inlet and outlet female test ports
G426 = ¾" drain on bottom of housing
G440 = ½" drain on bottom of housing

NOTES:

Box 2. Double and triple stacking of K-size elements can be replaced by KK and 27K elements, respectively. Number of elements must equal 2 when using KK or 27K elements.

Box 3. Replacement element part numbers are identical to contents of Boxes 2, 3, 4, and 5. K25 is not available with EPR seals.

Box 5. For options H, V, and H.5, all aluminum parts are anodized. H.5 seal designation includes the following: EPR seals, stainless steel wire mesh on elements, and light oil coating on housing exterior. Viton® is a registered trademark of DuPont Dow Elastomers. Skydrol® is a registered trademark of Solutia Inc.

Medium Pressure Filter RLD

Model No. of filter in photograph is RLD25DNZ5S24DW.

Features and Benefits

- Lightweight duplex filter constructed of aluminum
- High chromium content aluminum alloy is water tolerant – anodization is not required for high water-based fluids (HWBF)
- Filter housings are designed to withstand pressure surges as well as high static pressure loads
- Screw-in bowl allows the filter element to be easily removed for replacement or cleaning
- Standard model supplied with drain plugs
- Standard Viton® seal on filter housing
- Filter contains an integrated equalization valve
- Pressure is equalized between filters by raising the change-over lever prior to switching it to the relevant filter side

100 gpm
380 L/min
350 psi
24 bar

Filter Housing Specifications

Flow Rating:	Up to 100 gpm (380 L/min) for 150 SUS (32 cSt) fluids
Max. Operating Pressure:	350 psi (24 bar)
Min. Yield Pressure:	Contact factory
Rated Fatigue Pressure:	350 psi (24 bar)
Temp. Range:	-22°F to 250°F (-30°C to 121°C)
Bypass Setting:	Standard: 102 psi (7 bar) Optional: 43 psi (3.0 bar)
Porting Head: Element Case:	Aluminum Aluminum
Weight of RLD-25DN: Weight of RLD-40DN:	26 lbs. (11.8 kg) 29 lbs. (13.0 kg)
Element Change Clearance:	25DN: 3.5" (89 mm) 40DN: 3.5" (89 mm)

Fluid Compatibility

Type Fluid	Appropriate Schroeder Media
Petroleum Based Fluids	All Z-Media® (synthetic)
High Water Content	All Z-Media® (synthetic)
Invert Emulsions	10 and 25 µ Z-Media® (synthetic)
Water Glycols	3, 6, 10 and 25 µ Z-Media® (synthetic)

Medium Pressure Filter

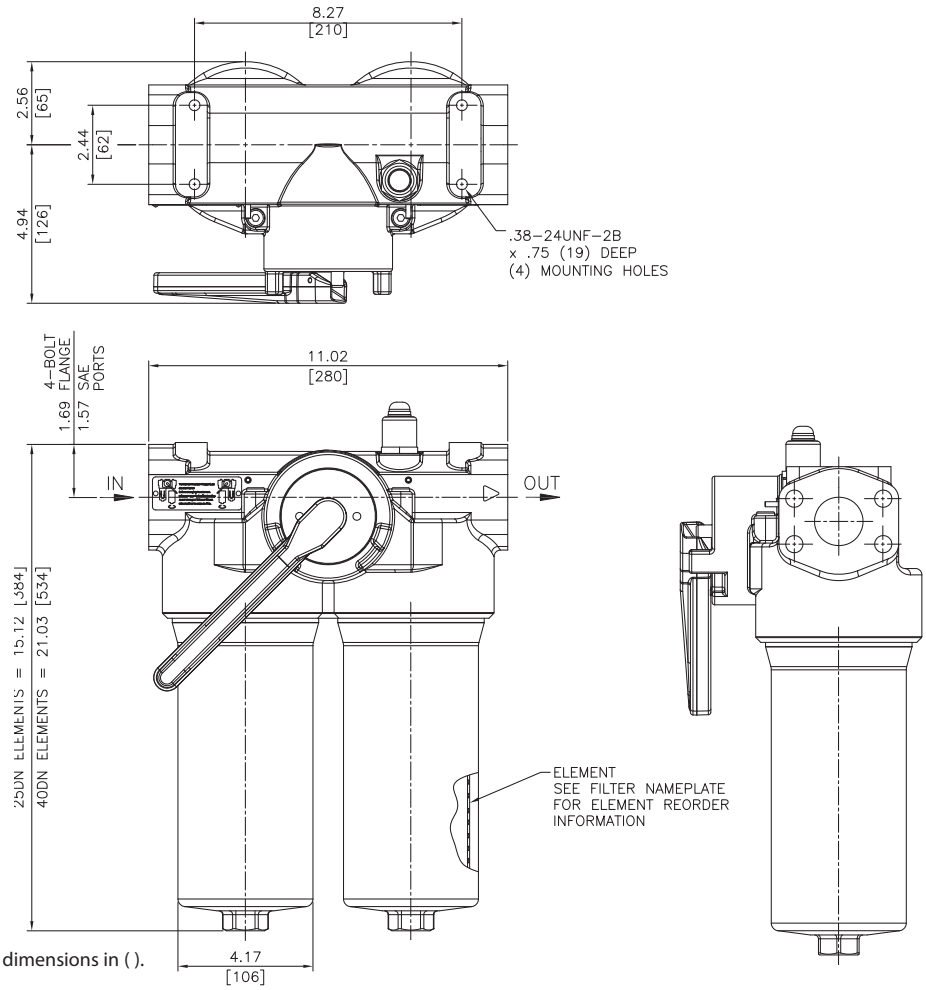

Metric dimensions in ( ).

Element Performance Information & Dirt Holding Capacity

Element	Filtration Ratio Per ISO 4572/NFPA T3.10.8.8 Using automated particle counter (APC) calibrated per ISO 4402			Filtration Ratio per ISO 16889 Using APC calibrated per ISO 11171	
	$ß_x \geq 75$	$ß_x \geq 100$	$ß_x \geq 200$	$ß_{x(c)} \geq 200$	$ß_{x(c)} \geq 1000$
25/40DNZ3	<1.0	<1.0	<2.0	<4.0	4.8
25/40DNZ6	2.5	3.0	4.0	4.8	6.3
25/40DNZ10	7.4	8.2	10.0	8.0	10.0
25/40DNZ25	18.0	20.0	22.5	19.0	24.0

Element	DHC (gm)	Element	DHC (gm)
25DNZ3	57	40DNZ3	105
25DNZ6	62	40DNZ6	115
25DNZ10	52	40DNZ10	104
25DNZ25	48	40DNZ25	94

Element Collapse Rating: 290 psid (20 bar)

Flow Direction: Outside In

Element Nominal Dimensions: 3.0" (75 mm) O.D. x 14.5" (370 mm) long

Pressure Drop Information
Based on Flow Rate and Viscosity

$\Delta P_{housing}$

RLD $\Delta P_{housing}$ for fluids with sp gr (specific gravity) = 0.86:

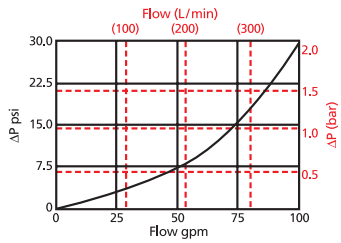

$\Delta P_{element}$

25DNZ

Element Pressure Drop versus Flow Rate at 32 cSt (150 SUS)

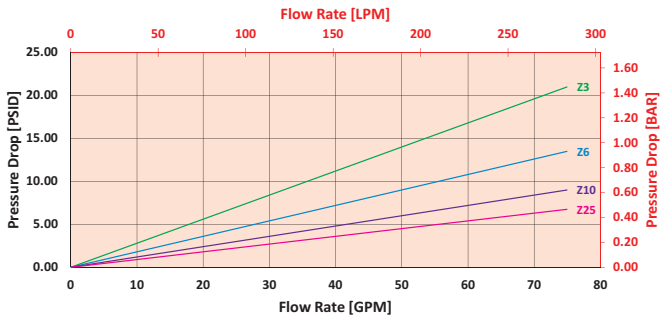

40DNZ

Element Pressure Drop versus Flow Rate at 32 cSt (150 SUS)

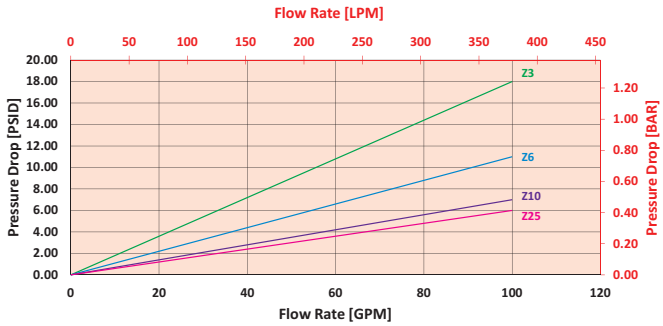

$$\Delta P_{filter} = \Delta P_{housing} + (\Delta P_{element} * V_f)$$

Exercise:

Determine ΔP_{filter} at 70 gpm (265.3 L/min) for RLD25DNZ5VF2440VM using 160 SUS (34 cSt) fluid.

Use the housing pressure curve to determine $\Delta P_{housing}$ at 70 gpm. In this case, $\Delta P_{housing}$ is 14 psi (.96 bar) on the graph for the RLD housing.

Use the element pressure curve to determine $\Delta P_{element}$ at 70 gpm. In this case, $\Delta P_{element}$ is 8 psi (.55 bar) according to the graph for the 25DNZ5V element.

Because the viscosity in this sample is 160 SUS (44 cSt), we determine the Viscosity Factor (V_f) by dividing the Operating Fluid Viscosity with the Standard Viscosity of 150 SUS (32 cSt). To best determine your Operating Fluid Viscosity, please reference the chart in Appendix D.

Finally, the overall filter pressure differential, ΔP_{filter}, is calculated by adding $\Delta P_{housing}$ with the true element pressure differential, ($\Delta P_{element} * V_f$). The $\Delta P_{element}$ from the graph has to be multiplied by the viscosity factor to get the true pressure differential across the element.

Solution:

$\Delta P_{housing}$ = 14 psi [.96 bar] | $\Delta P_{element}$ = 8 psi [.55 bar]

V_f = 160 SUS (34 cSt) / 150 SUS (32 cSt) = 1.1

ΔP_{filter} = 14 psi + (8 psi * 1.1) = 22.8 psi

OR

ΔP_{filter} = .96 bar + (.55 bar * 1.1) = 1.6 bar

RLD Medium Pressure Filter

Filter Model Number Selection

How to Build a Valid Model Number for a Schroeder RLD:

BOX 1		BOX 2		BOX 3		BOX 4		BOX 5		BOX 6		BOX 7
RLD	–		–		–		–		–		–	

Example: NOTE: One option per box

BOX 1		BOX 2		BOX 3		BOX 4		BOX 5		BOX 6		BOX 7	
RLD	–	25	–	DNZ5	–	V	–	F24	–	40	–	VM	= RLD25DNZ5VF2440VM

BOX 1

Filter Series
RLD

BOX 2

Length of Elements (cm)
25
40

BOX 3

Element Size and Media
DNZ5 = DN size 5 µ synthetic media
DNZ10 = DN size 10 µ synthetic media
DNZ25 = DN size 25 µ synthetic media
DNM25 = DN size 25 µ M media (reuseable metal)
DNM50 = DN size 50 µ M media (reuseable metal)
DNM100 = DN size 100 µ M media (reuseable metal)
DNM200 = DN size 200 µ M media (reuseable metal)

BOX 4

Element Seal Material
Omit = Buna N
V = Viton®

BOX 5

Porting
F24 = 1½" SAE 4-bolt flange Code 61
S24 = SAE-24 (1½")

BOX 6

Bypass Setting
Omit = 102 psi cracking
40 = 43 psi cracking

BOX 7

Dirt Alarm® Options		
	Omit =	None
Visual	VM =	Visual pop-up w/manual reset
Electrical	DW =	AC/DC 3-wire (NO or NC)

VM = Manual Reset

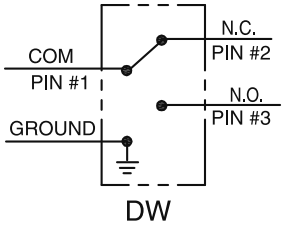

DW = AC/DC 3-wire
(NO or NC)

NOTES:

Box 2. Replacement element part numbers are a combination of Boxes 2, 3 and 4. Example: 40DNZ10

Box 4. Filter housings are supplied with standard Viton seals. Seal designation in Box 4 applies to element only. Viton® is a registered trade-mark of DuPont Dow Elastomers.

Tank-Mounted Return Line Filter

GRTB

Model No. of filter in photograph is GRTB1KBGZ10S.

Features and Benefits

- Patented GeoSeal® Elements
- Various Dirt Alarm® options
- Cost optimized for in-tank applications
- Plastic bowl and cap lower cost and minimize weight
- UV resistant cap
- Same day shipment model available

Part of Schroeder Industries' Energy Sustainability Initiative

100 gpm
380 L/min
100 psi
7 bar

Filter Housing Specifications

Flow Rating:	Up to 100 gpm (380 L/min) for 150 SUS (32 cSt) fluids
Max. Operating Pressure:	100 psi (7 bar)
Min. Yield Pressure:	400 psi (28 bar)
Rated Fatigue Pressure:	145 psi (10 bar), Per NFPA T2.6.1-2005
Temp. Range:	-20°F to 200°F (-29°C to 93°C)
Bypass Setting:	Cracking: 25 psi (1.7 bar) Full Flow: 42 psi (2.9 bar)
Cap & Bowl: Porting Head:	Nylon Aluminum
Weight of GRTB-1K:	5.2 lbs (2.36 kg)
Element Change Clearance:	9.5" (240 mm)

Fluid Compatibility

Type Fluid	Appropriate Schroeder Media
Petroleum Based Fluids	All E media (cellulose), Z-Media® and ASP® media (synthetic)
Invert Emulsions	10 and 25 µ Z-Media® and 10 µ ASP® media (synthetic)

Tank-Mounted Return Line Filter

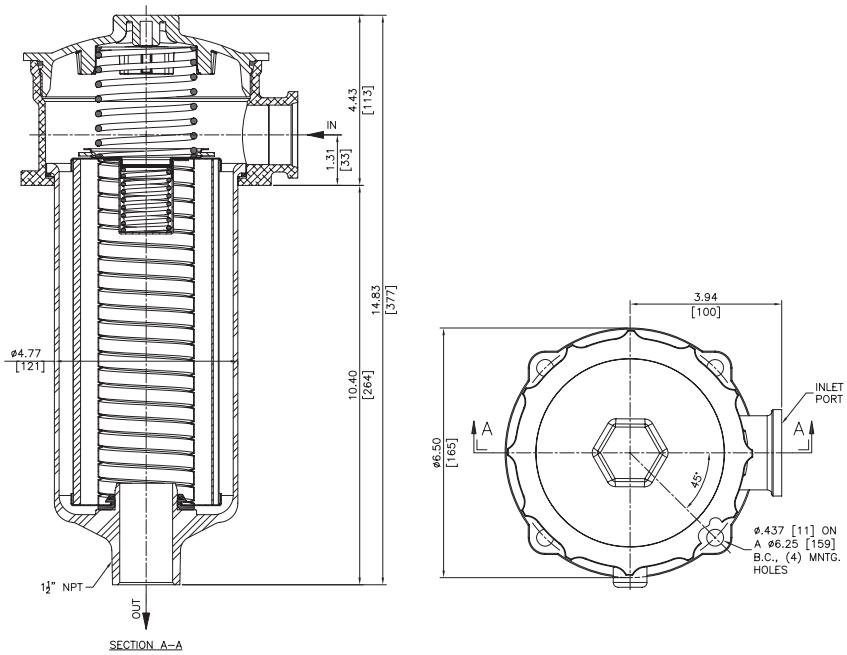

Metric dimensions in ( ).

Element Performance Information & Dirt Holding Capacity

	Filtration Ratio Per ISO 4572/NFPA T3.10.8.8 Using automated particle counter (APC) calibrated per ISO 4402			Filtration Ratio per ISO 16889 Using APC calibrated per ISO 11171	
Element	$ß_x \geq 75$	$ß_x \geq 100$	$ß_x \geq 200$	$ß_x(c) \geq 200$	$ß_x(c) \geq 1000$
KBGZ1	<1.0	<1.0	<1.0	<4.0	4.2
KBGZ3	<1.0	<1.0	<2.0	<4.0	4.8
KBGZ5	2.5	3.0	4.0	4.8	6.3
KBGZ10	7.4	8.2	10.0	8.0	10.0
KBGZ25	18.0	20.0	22.5	19.0	24.0

Element	DHC (gm)
KBGZ1	112
KBGZ3	115
KBGZ5	119
KBGZ10	108
KBGZ25	93

Element Collapse Rating: 150 psid (10 bar) for standard elements

Flow Direction: Outside In

Element Nominal Dimensions: K: 3.9" (99 mm) O.D. x 9.0" (230 mm) long

Pressure Drop Information

Based on Flow Rate and Viscosity

$\Delta P_{housing}$

GRTB $\Delta P_{housing}$ for fluids with sp gr (specific gravity) = 0.86:

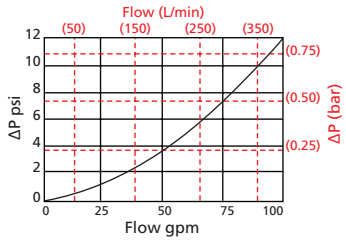

$\Delta P_{element}$

KBGZ

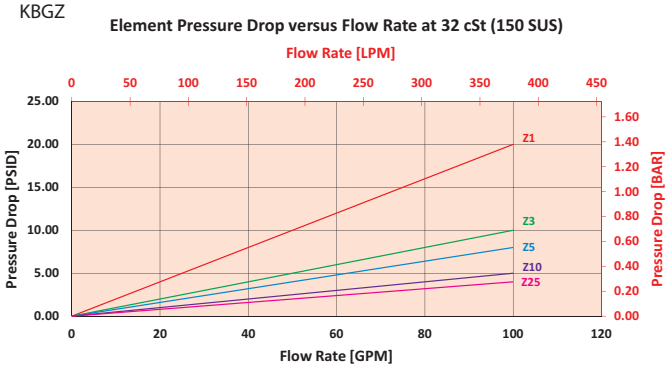

$$\Delta P_{filter} = \Delta P_{housing} + (\Delta P_{element} * V_f)$$

Exercise:

Determine ΔP_{filter} at 80 gpm (303.2 L/min) for GRTB1KBGZ10PY2 using 160 SUS (34 cSt) fluid.

Use the housing pressure curve to determine $\Delta P_{housing}$ at 80 gpm. In this case, $\Delta P_{housing}$ is 8 psi (.55 bar) on the graph for the GRTB housing.

Use the element pressure curve to determine $\Delta P_{element}$ at 80 gpm. In this case, $\Delta P_{element}$ is 4 psi (.27 bar) according to the graph for the KBGZ10 element.

Because the viscosity in this sample is 160 SUS (34 cSt), we determine the Viscosity Factor (V_f) by dividing the Operating Fluid Viscosity with the Standard Viscosity of 150 SUS (32 cSt). To best determine your Operating Fluid Viscosity, please reference the chart in Appendix D.

Finally, the overall filter pressure differential, ΔP_{filter}, is calculated by adding $\Delta P_{housing}$ with the true element pressure differential, ($\Delta P_{element} * V_f$). The $\Delta P_{element}$ from the graph has to be multiplied by the viscosity factor to get the true pressure differential across the element.

Solution:

$\Delta P_{housing}$ = 8 psi [.55 bar] | $\Delta P_{element}$ = 4 psi [.27 bar]

V_f = 160 SUS (34 cSt) / 150 SUS (32 cSt) = 1.1

ΔP_{filter} = 8 psi + (4 psi * 1.1) = 12.4 psi

OR

ΔP_{filter} = .55 bar + (.27 bar * 1.1) = .85 bar

GRTB Tank-Mounted Return Line Filter

Filter Model Number Selection

Highlighted product eligible for QuickDelivery

How to Build a Valid Model Number for a Schroeder GRTB:

BOX 1	BOX 2	BOX 3	BOX 4	BOX 5	BOX 6	BOX 7	BOX 8
GRTB –	–	–	–	–	–	–	–

Example: NOTE: One option per box

BOX 1	BOX 2	BOX 3	BOX 4	BOX 5	BOX 6	BOX 7	BOX 8	
GRTB –	1KBG –	Z –	10 –	–	P –	–	Y2	= GRTB1KBGZ10PY2

BOX 1

Filter Series
GRTB (GeoSeal®)
RTB

BOX 2

Element Size
1KBG (GeoSeal®)
1KB

BOX 3

Media Type
Omit = E-Media (cellulose)
Z = Excellement® Z-Media®

BOX 4

Micron Rating
1 = 1 µ Z-Media®
3 = 3 µ Z-Media®
5 = 5 µ Z-Media®
10 = 10 µ E, and Z-Media®
25 = 25 µ E, and Z-Media®

BOX 5

Seals
Omit = Buna N

BOX 6

Port
P = 1.25" NPT
S = SAE-20
B = ISO 228 G-1.25"

BOX 7

Outlet Porting Options
Omit = 1½" NPT male
C = Check valve
D = Diffuser
CD = Check valve & diffuser
T = 13" Tube extension

BOX 8

Indicator	
Omit =	None
Y2 =	Back-mounted tricolor gauge
ES =	Electric switch
ES1 =	Heavy-duty electric switch with conduit connections
ES2 =	Electrical Switch with Deutsch Connector
ES3 =	Electric Switch with DIN 43650

NOTES:

Box 3. Use boxes 2, 3, 4 ,and 5 to build a replacement element part number.

MiniMiser™ Tank-Mounted Filter

MTA

15 gpm
55 L/min
100 psi
7 bar

Model No. of filter in photograph is MTA3TAZ10P8.

Features and Benefits

- Low pressure tank-mounted filter
- Compact size minimizes space requirements
- Minimizer is cost-effective alternative to spin-on filters
- Special filter element design provides aftermarket benefits

Filter Housing Specifications

Flow Rating:	Up to 15 gpm (55 L/min) for 150 SUS (32 cSt) fluids
Max. Operating Pressure:	100 psi (7 bar)
Min. Yield Pressure:	269 psi (18 bar), per NFPA T2.6.1
Rated Fatigue Pressure:	Contact factory
Temp. Range:	-20°F to 225°F (-29°C to 107°C)
Bypass Setting:	Cracking: 25 psi (2 bar) Full Flow: 48 psi (3.3 bar)
Porting Head & Cap: Element Case:	Die Cast Aluminum Glass Filled Nylon
Weight of MTA-3:	1.0 lbs. (0.5 kg)
Element Change Clearance:	3.0" (76 mm)

Fluid Compatibility

Type Fluid	Appropriate Schroeder Media
Petroleum Based Fluids	All E media (cellulose) and Z-Media® (synthetic)

MiniMiser™ Tank-Mounted Filter

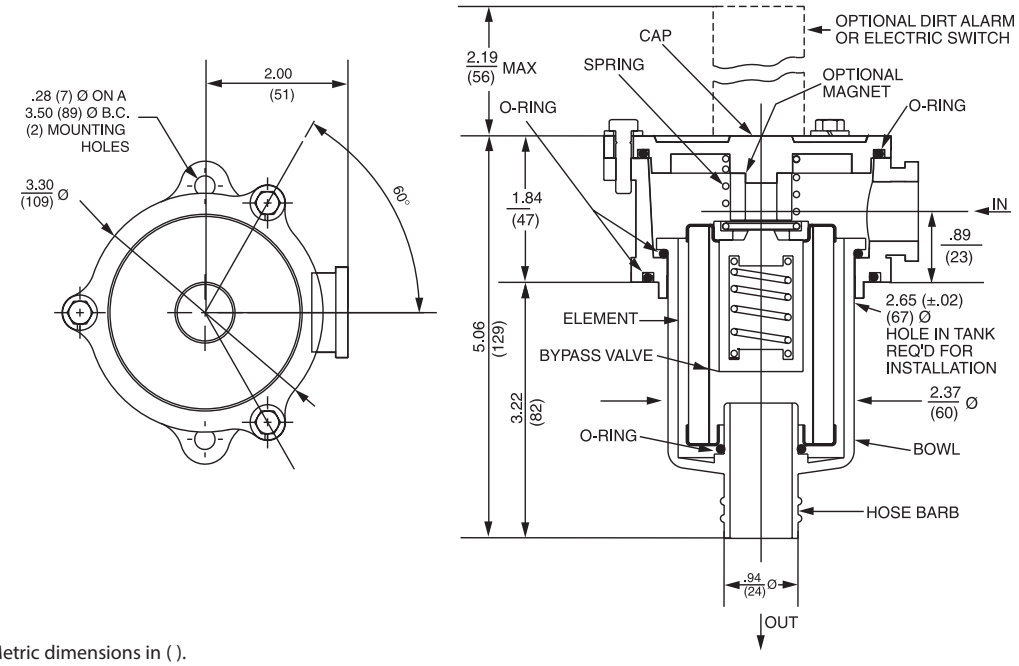

Metric dimensions in ( ).

Element Performance Information & Dirt Holding Capacity

Element	Filtration Ratio Per ISO 4572/NFPA T3.10.8.8 Using automated particle counter (APC) calibrated per ISO 4402			Filtration Ratio per ISO 16889 Using APC calibrated per ISO 11171	
	$ß_x \geq 75$	$ß_x \geq 100$	$ß_x \geq 200$	$ß_{x(c)} \geq 200$	$ß_{x(c)} \geq 1000$
3TAZ3	<1.0	<1.0	<2.0	<4.0	4.8
3TAZ5	2.5	3.0	4.0	4.8	6.3
3TAZ10	7.4	8.2	10.0	8.0	10.0
3TAZ25	18.0	20.0	22.5	19.0	24.0

Element	DHC (gm)
3TAZ3	4
3TAZ5	6
3TAZ10	4
3TAZ25	4

Element Collapse Rating: 150 psid (10 bar)

Flow Direction: Outside In

Element Nominal Dimensions: 2.0" (51 mm) O.D. x 3.0" (76 mm) long

Pressure Drop Information

Based on Flow Rate and Viscosity

$\Delta P_{housing}$

MTA $\Delta P_{housing}$ for fluids with sp gr (specific gravity) = 0.86:

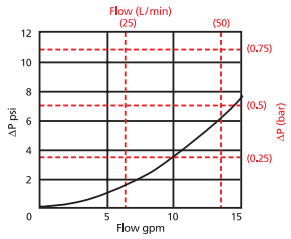

$\Delta P_{element}$

3TAZ

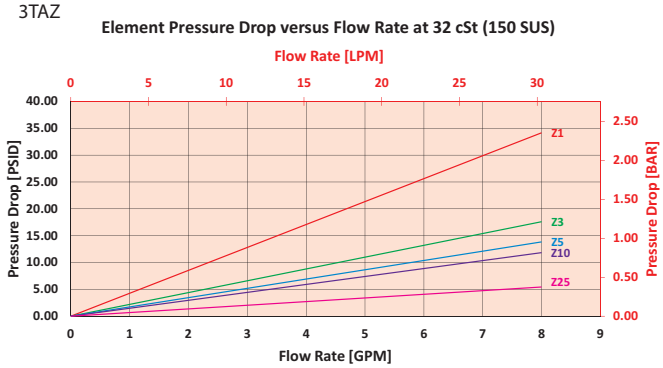

$$\Delta P_{filter} = \Delta P_{housing} + (\Delta P_{element} * V_f)$$

Exercise:

Determine ΔP_{filter} at 10 gpm (37.9 L/min) for MTA3TAZ25P8Y5 using 160 SUS (34 cSt) fluid.

Use the housing pressure curve to determine $\Delta P_{housing}$ at 10 gpm. In this case, $\Delta P_{housing}$ is 4 psi (.27 bar) on the graph for the MTA housing.

Use the element pressure curve to determine $\Delta P_{element}$ at 10 gpm. In this case, $\Delta P_{element}$ is 7 psi (.48 bar) according to the graph for the 3TAZ25 element.

Because the viscosity in this sample is 160 SUS (34 cSt), we determine the Viscosity Factor (V_f) by dividing the Operating Fluid Viscosity with the Standard Viscosity of 150 SUS (32 cSt). To best determine your Operating Fluid Viscosity, please reference the chart in Appendix D.

Finally, the overall filter pressure differential, ΔP_{filter}, is calculated by adding $\Delta P_{housing}$ with the true element pressure differential, ($\Delta P_{element} * V_f$). The $\Delta P_{element}$ from the graph has to be multiplied by the viscosity factor to get the true pressure differential across the element.

Solution:

$\Delta P_{housing}$ = 4 psi [.27 bar] | $\Delta P_{element}$ = 7 psi [.48 bar]

V_f = 160 SUS (34 cSt) / 150 SUS (32 cSt) = 1.1

ΔP_{filter} = 4 psi + (7 psi * 1.1) = 11.7 psi

OR

ΔP_{filter} = .27 bar + (.48 bar * 1.1) = .80 bar

Note:
If your element is not graphed, use the following equation:
$\Delta P_{element}$ = Flow Rate x $\Delta P_{f.}$ Plug this variable into the overall pressure drop equation.

Ele.	ΔP
3TA10	1.40
3TA25	0.33

MiniMiser™ Tank-Mounted Filter

Filter Model Number Selection

How to Build a Valid Model Number for a Schroeder MTA:

BOX 1		BOX 2		BOX 3		BOX 4		BOX 5
MTA	–		–		–		–	

Example: NOTE: One option per box

BOX 1		BOX 2		BOX 3		BOX 4		BOX 5	
MTA	–	3	–	TA25	–	P8	–	Y5	= MTA3TA25P8Y5

BOX 1

Filter Series
MTA

BOX 2

Element Length (in)
3

BOX 3

Element Size and Media
TA10 = TA size 10 µ E media (cellulose)
TA25 = TA size 25 µ E media (cellulose)
TAZ1 = TA size 1 µ Excellement® Z-Media® (synthetic)
TAZ3 = TA size 3 µ Excellement® Z-Media® (synthetic)
TAZ5 = TA size 5 µ Excellement® Z-Media® (synthetic)
TAZ10 = TA size 10 µ Excellement® Z-Media® (synthetic)
TAZ25 = TA size 25 µ Excellement® Z-Media® (synthetic)

BOX 4

Porting Options
P8 = ½" NPTF
S8 = SAE-8

BOX 5

Dirt Alarm® Options	
	Omit = None
Visual	Y2C = Bottom-mounted gauge in cap Y5 = Back-mounted gauge in cap
Electrical	ESC = Electric pressure switch (2 terminals)

MiniMiser™ Tank-Mounted Filter

MTB

Model No. of filter in photograph is MTB5TBZ5P16H.

Features and Benefits

- Low pressure tank-mounted filter
- Compact size minimizes space requirements
- Minimizer is cost-effective alternative to spin-on filters
- Special filter element design provides aftermarket benefits

35 gpm
135 L/min
100 psi
7 bar

Filter Housing Specifications

Flow Rating:	Up to 25 gpm (95 L/min) for 150 SUS (32 cSt) fluids–MTB-3 Up to 35 gpm (135 L/min) for 150 SUS (32 cSt) fluids–MTB-5
Max. Operating Pressure:	100 psi (7 bar)
Min. Yield Pressure:	229 psi (15 bar), per NFPA T2.6.1
Rated Fatigue Pressure:	Contact factory
Temp. Range:	-20°F to 225°F (-29°C to 107°C)
Bypass Setting:	Cracking: 25 psi (2 bar) Full Flow: 51 psi (3.5 bar)
Porting Head & Cap: Element Case:	Die Cast Aluminum Glass Filled Nylon
Weight of MTB-3: Weight of MTB-5:	1.8 lbs. (0.8 kg) 2.1 lbs. (1.0 kg)
Element Change Clearance:	3.0" (76 mm) MTB-3 5.0" (127 mm) MTB-5

Fluid Compatibility

Type Fluid	Appropriate Schroeder Media
Petroleum Based Fluids	All E media (cellulose) and Z-Media® (synthetic)

MiniMiser™ Tank-Mounted Filter

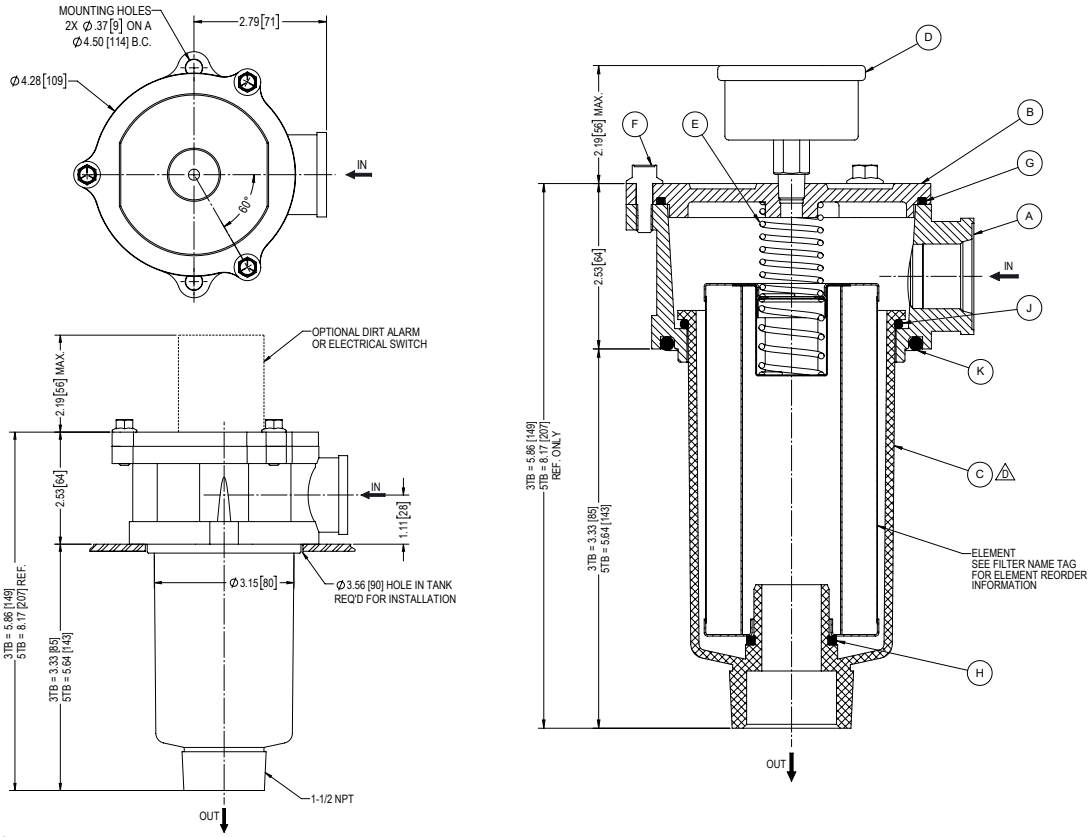

Metric dimensions in ( ).

Element Performance Information & Dirt Holding Capacity

Element	Filtration Ratio Per ISO 4572/NFPA T3.10.8.8 Using automated particle counter (APC) calibrated per ISO 4402			Filtration Ratio per ISO 16889 Using APC calibrated per ISO 11171	
	$ß_x \geq 75$	$ß_x \geq 100$	$ß_x \geq 200$	$ß_x(c) \geq 200$	$ß_x(c) \geq 1000$
3TBZ3	<1.0	<1.0	<2.0	<4.0	4.8
3TBZ5	2.5	3.0	4.0	4.8	6.3
3TBZ10	7.4	8.2	10.0	8.0	10.0
3TBZ25	18.0	20.0	22.5	19.0	24.0
5TBZ3	<1.0	<1.0	<2.0	4.7	5.8
5TBZ5	2.5	3.0	4.0	5.6	7.2
5TBZ10	7.4	8.2	10.0	8.0	9.8
5TBZ25	18.0	20.0	22.5	19.0	24.0

Element	DHC (gm)
3TBZ3	11
3TBZ5	12
3TBZ10	11
3TBZ25	11
5TBZ3	18
5TBZ5	21
5TBZ10	17
5TBZ25	18

Element Collapse Rating: 150 psid (10 bar)

Flow Direction: Outside In

Element Nominal Dimensions: 3TB: 3.0" (76 mm) O.D. x 3.0" (76 mm) long
5TB: 3.0" (76 mm) O.D. x 5.0" (127 mm) long

Pressure Drop Information

Based on Flow Rate and Viscosity

$\Delta P_{housing}$

MTB $\Delta P_{housing}$ for fluids with sp gr (specific gravity) = 0.86:

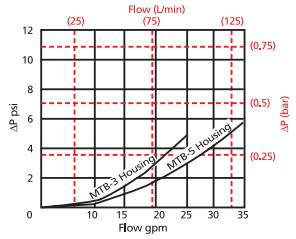

$\Delta P_{element}$

3TBZ

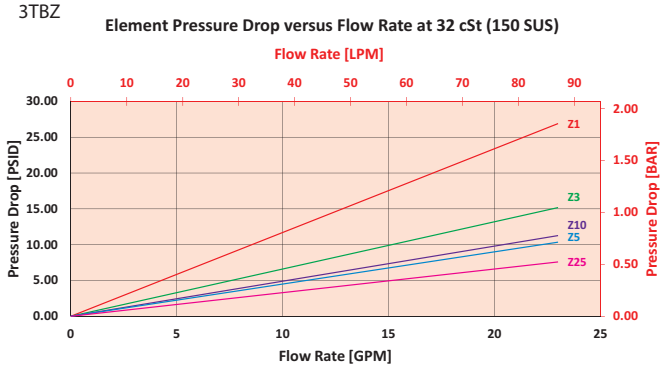

5TBZ

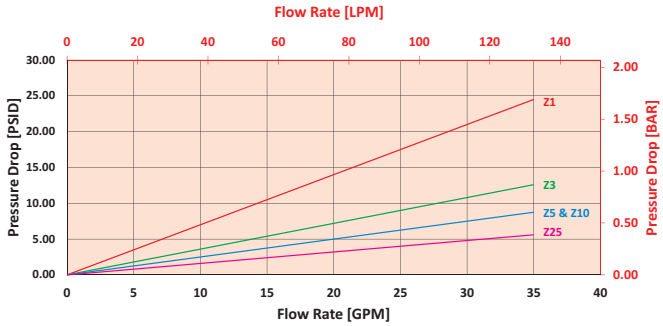

$$\Delta P_{filter} = \Delta P_{housing} + (\Delta P_{element} * V_f)$$

Exercise:

Determine ΔP_{filter} at 10 gpm (37.9 L/min) for MTB3TBZ25P12Y5 using 160 SUS (34 cSt) fluid.

Use the housing pressure curve to determine $\Delta P_{housing}$ at 10 gpm. In this case, $\Delta P_{housing}$ is 1 psi (.07 bar) on the graph for the MTB housing.

Use the element pressure curve to determine $\Delta P_{element}$ at 10 gpm. In this case, $\Delta P_{element}$ is 3 psi (.21 bar) according to the graph for the 3TBZ25 element.

Because the viscosity in this sample is 160 SUS (34 cSt), we determine the Viscosity Factor (V_f) by dividing the Operating Fluid Viscosity with the Standard Viscosity of 150 SUS (32 cSt). To best determine your Operating Fluid Viscosity, please reference the chart in Appendix D.

Finally, the overall filter pressure differential, ΔP_{filter}, is calculated by adding $\Delta P_{housing}$ with the true element pressure differential, ($\Delta P_{element} * V_f$). The $\Delta P_{element}$ from the graph has to be multiplied by the viscosity factor to get the true pressure differential across the element.

Solution:

$\Delta P_{housing}$ = 1 psi [.07 bar] | $\Delta P_{element}$ = 3 psi [.21 bar]

V_f = 160 SUS (34 cSt) / 150 SUS (32 cSt) = 1.1

ΔP_{filter} = 1 psi + (3 psi * 1.1) = 4.3 psi

OR

ΔP_{filter} = .07 bar + (.21 bar * 1.1) = .30 bar

Note:
If your element is not graphed, use the following equation:
$\Delta P_{element}$ = Flow Rate x $\Delta P_{f.}$ Plug this variable into the overall pressure drop equation.

Ele.	ΔP	Ele.	ΔP
3TB10	1.40	5TB10	0.40
3TB25	0.10	5TB25	0.08

MiniMiser™ Tank-Mounted Filter

Filter Model Number Selection

How to Build a Valid Model Number for a Schroeder MTB:

BOX 1		BOX 2		BOX 3		BOX 4		BOX 5		BOX 6
MTB	–		–		–		–		–	

Example: NOTE: One option per box

BOX 1		BOX 2		BOX 3		BOX 4		BOX 5		BOX 6	
MTB	–	3	–	TB25	–	P12	–	H	–	Y5	= MTB3TB25P12HY5

BOX 1

Filter Series
MTB

BOX 2

Element Length (in)
3
5

BOX 3

Element Size and Media
TB10 = T size 10 µ E media (cellulose)
TB25 = T size 25 µ E media (cellulose)
TBZ3 = T size 3 µ Excellement® Z-Media® (synthetic)
TBZ5 = T size 5 µ Excellement® Z-Media® (synthetic)
TBZ10 = T size 10 µ Excellement® Z-Media® (synthetic)
TBZ25 = T size 25 µ Excellement® Z-Media® (synthetic)

BOX 4

Porting Options
P12 = ¾" NPTF
P16 = 1" NPTF
S12 = SAE-12
S16 = SAE-16
B12 = ISO 228 G-¾"
B16 = ISO 228 G-1"

BOX 5

Outlet Options	
Omit	= 1.5" NPT Outlet
H	= Hose Barb Outlet
D	= Diffuser

BOX 6

Dirt Alarm® Options		
	Omit =	None
Visual	Y2C =	Bottom-mounted gauge in cap
	Y5 =	Back-mounted gauge in cap
Electrical	ESC =	Electric pressure switch (2 terminals)

Tank-Mounted Filter ZT

Model No. of filter in photograph is ZT8ZZ10PPESAB.

Features and Benefits

- Low pressure tank-mounted filter
- Available with dual inlet porting
- Offered in pipe, SAE straight thread and ISO 228 porting
- Various Dirt Alarm® options
- Optional PAB1 breather
- Available with quality-protected GeoSeal® Elements (GZT)
- G Same day shipment model available

Part of Schroeder Industries' Energy Sustainability Initiative

40 gpm
150 L/min
100 psi
7 bar

Filter Housing Specifications

Flow Rating:	Up to 40 gpm (150 L/min) for 150 SUS (32 cSt) fluids
Max. Operating Pressure:	100 psi (7 bar)
Min. Yield Pressure:	300 psi (21 bar), per NFPA T2.6.1
Rated Fatigue Pressure:	90 psi (6 bar), per NFPA T2.6.1-R1-2005
Temp. Range:	-20°F to 225°F (-29°C to 107°C)
Bypass Setting:	Cracking: 25 psi (1.7 bar) Full Flow: 39 psi (2.7 bar)
Cap & Bowl:	Nylon
Porting Head:	Aluminum
Weight of ZT-8Z:	3.3 lbs. (1.49 kg)
Element Change Clearance:	10.0" (254 mm)

Fluid Compatibility

Type Fluid	Appropriate Schroeder Media
Petroleum Based Fluids	All E media (cellulose) and Z-Media® (synthetic)
High Water Content	All Z-Media (synthetic)
Invert Emulsions	10 and 25 µ Z-Media® (synthetic)
Water Glycols	3, 5, 10 and 25 µ Z-Media® (synthetic)
Phosphate Esters	All Z-Media® (synthetic) with H (EPR) seal designation

Tank-Mounted Filter

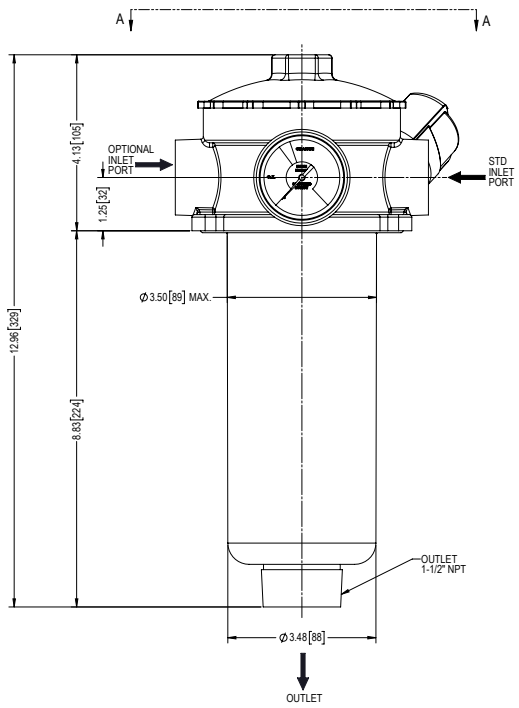

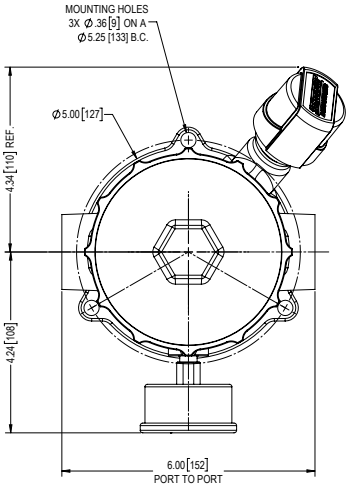

Metric dimensions in ( ).

Element Performance Information & Dirt Holding Capacity

Element	Filtration Ratio Per ISO 4572/NFPA T3.10.8.8 Using automated particle counter (APC) calibrated per ISO 4402			Filtration Ratio wrt ISO 16889 Using APC calibrated per ISO 11171	
	$ß_x \geq 75$	$ß_x \geq 100$	$ß_x \geq 200$	$ß_x^{(c)} \geq 200$	$ß_x^{(c)} \geq 1000$
8Z3	6.8	7.5	10.0	N/A	N/A
8Z10	15.5	16.2	18.0	N/A	N/A
8ZZ1	<1.0	<1.0	<1.0	<4.0	4.2
8ZZ3	<1.0	<1.0	<2.0	<4.0	4.8
8ZZ5	2.5	3.0	4.0	4.8	6.3
8ZZ10	7.4	8.2	10.0	8.0	10.0
8ZZ25	18.0	20.0	22.5	19.0	24.0

Element	DHC (gm)
8Z3	39
8Z10	32
8ZZ1	51
8ZZ3	52
8ZZ5	59
8ZZ10	55
8ZZ25	77

Element Collapse Rating: 150 psid (10 bar)

Flow Direction: Outside In

Element Nominal Dimensions: 3.2" (81 mm) O.D. x 9.25" (235 mm) long

Pressure Drop Information

Based on Flow Rate and Viscosity

$\Delta P_{housing}$

ZT $\Delta P_{housing}$ for fluids with sp gr (specific gravity) = 0.86:

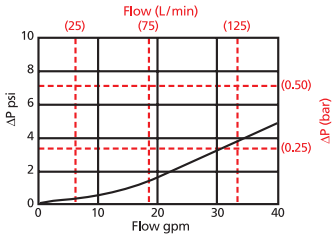

$\Delta P_{element}$

8ZZ

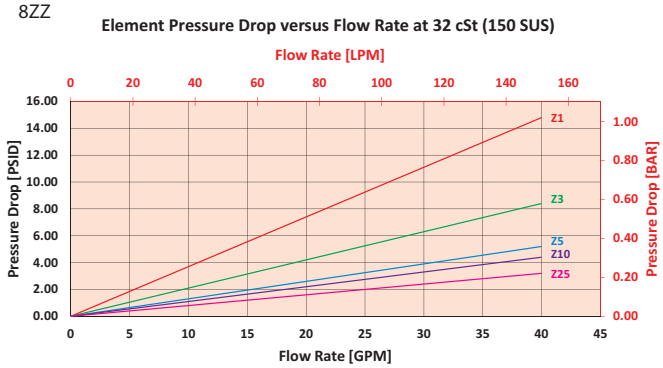

$$\Delta P_{filter} = \Delta P_{housing} + (\Delta P_{element} * V_f)$$

Exercise:

Determine ΔP_{filter} at 30 gpm (119.7 L/min) for ZT8ZZ10SY2 using 160 SUS (34 cSt) fluid.

Use the housing pressure curve to determine $\Delta P_{housing}$ at 30 gpm. In this case, $\Delta P_{housing}$ is 3.5 psi (.24 bar) on the graph for the ZT housing.

Use the element pressure curve to determine $\Delta P_{element}$ at 30 gpm. In this case, $\Delta P_{element}$ is 3.5 psi (.24 bar) according to the graph for the 8ZZ10 element.

Because the viscosity in this sample is 160 SUS (34 cSt), we determine the Viscosity Factor (V_f) by dividing the Operating Fluid Viscosity with the Standard Viscosity of 150 SUS (32 cSt). To best determine your Operating Fluid Viscosity, please reference the chart in Appendix D.

Finally, the overall filter pressure differential, ΔP_{filter}, is calculated by adding $\Delta P_{housing}$ with the true element pressure differential, ($\Delta P_{element}$*V_f). The $\Delta P_{element}$ from the graph has to be multiplied by the viscosity factor to get the true pressure differential across the element.

Solution:

$\Delta P_{housing}$ = 3.5 psi [.24 bar] | $\Delta P_{element}$ = 3.5 psi [.24 bar]

V_f = 160 SUS (34 cSt) / 150 SUS (32 cSt) = 1.1

ΔP_{filter} = 3.5 psi + (3.5 psi * 1.1) = 7.4 psi

OR

ΔP_{filter} = .24 bar + (.24 bar * 1.1) = .50 bar

Note:
If your element is not graphed, use the following equation:
$\Delta P_{element}$ = Flow Rate x $\Delta P_{f.}$ Plug this variable into the overall pressure drop equation.

Ele.	ΔP
8Z3	0.25
8Z10	0.09
8Z25	0.02

Tank-Mounted Filter

Filter Model Number Selection

Highlighted product eligible for QuickDelivery

How to Build a Valid Model Number for a Schroeder ZT:

BOX 1	BOX 2	BOX 3	BOX 4	BOX 5	BOX 6	BOX 7	BOX 8
ZT –	–	–	–	–	–	–	–

Example: NOTE: One option per box

BOX 1	BOX 2	BOX 3	BOX 4	BOX 5	BOX 6	BOX 7	BOX 8	
ZT –	8 –	Z10 –	–	S –	Y2 –	–	–	= ZT8Z10SY2

BOX 1

Filter Series
ZT
GZT (GeoSeal®)

BOX 2

Element Length (in)
8

BOX 3

Element Size and Media
Z3 = Z size 3 µ E media (cellulose)
Z10 = Z size 10 µ E media (cellulose)
Z25 = Z size 25 µ E media (cellulose)
ZZ1 = Z size 1 µ Excellement® Z-Media® (synthetic)
ZZ3 = Z size 3 µ Excellement® Z-Media® (synthetic)
ZZ5 = Z size 5 µ Excellement® Z-Media® (synthetic)
ZZ10 = Z size 10 µ Excellement® Z-Media® (synthetic)
ZZ25 = Z size 25 µ Excellement® Z-Media® (synthetic)
GeoSeal® Element Options
GTZ3 = Z size 3 µ E media (cellulose)
GTZ10 = Z size 10 µ E media (cellulose)
GTZ25 = Z size 25 µ E media (cellulose)
GTZZ1 = Z size 1 µ Excellement® Z-Media® (synthetic)
GTZZ3 = Z size 3 µ Excellement® Z-Media® (synthetic)
GTZZ5 = Z size 5 µ Excellement® Z-Media® (synthetic)
GTZZ10 = Z size 10 µ Excellement® Z-Media® (synthetic)
GTZZ25 = Z size 25 µ Excellement® Z-Media® (synthetic)

BOX 4

Seal Material
Omit = Buna N

BOX 5

Inlet Porting
P = 1" NPTF
PP = Dual 1" NPTF
S = SAE-16
SS = Dual SAE-16
B = ISO 228 G-1"
BB = Dual ISO 228 G-1"

BOX 6

	Dirt Alarm® Options
	Omit = None
Visual	Y2 = Back-mounted tri-color gauge
	Y2C = Bottom-mounted gauge in cap
	Y5 = Back-mounted gauge in cap
Electrical	ES = Electric switch
	ES1 = Heavy-duty electric switch with conduit connection
	ES2 = Electrical Switch with Deutsch Connector

BOX 7

Outlet Porting
Omit = 1½" NPT male
D = Diffuser
T = 13" Tube Extension
G3039 = 1.5" NPT outlet removed

BOX 8

Options
Omit = None
B = Breather
M = Mounting Gasket (Buna N)

Air Fusion Technology

AFT

Model No. of filter in photograph is AFT8LKZ10L16N

Features and Benefits

- Patent Pending In-tank filter design
- Lightweight and as part of a tank optimization package can reduce reservoir size
- Lock & Key Quality Protected, OEM Specific Interfaces available
- Superior de-aeration performance
- 360 degree swivel connection. Lines stay connected during element changeouts
- Anti-Drain Check valve option to keep lines from emptying during element change outs
- 20 ft-lb max loading torque on inlet port

Part of Schroeder Industries' Energy Sustainability Initiative

40 gpm
151 L/min
100 psi
7 bar

Filter Housing Specifications

Flow Rating:	40 gpm (151 L/min)
Max. Operating Pressure:	100 psi (7 bar)
Min. Yield Pressure:	350 psi (24 bar)
Rated Fatigue Pressure:	100 psi (7 bar)
Temp. Range:	-20°F to 225°F (-29°C to 107°C)
Bypass Setting:	Cracking: 25 psi (1.7 bar)
Element Change Clearance:	4LK = 5.28" [134mm] 8LK = 8.62" [219mm] 12LK = 11.96" [304mm] 16LK = 15.30" [389mm]
Element Case:	12 elements

Fluid Compatibility

Type Fluid	Appropriate Schroeder Media
Petroleum Based Fluids	Z-Media® and ASP® media (synthetic)
High Water Content	All Z-Media® and ASP® media (synthetic)
Invert Emulsions	10 and 25 µ Z-Media® and 10 µ ASP® media (synthetic)
Water Glycols	3, 5, 10 and 25 µ Z-Media® and all ASP® media (synthetic)
Phosphate Esters	All Z-Media® (synthetic) with H (EPR) seal designation and all ASP® media (synthetic)

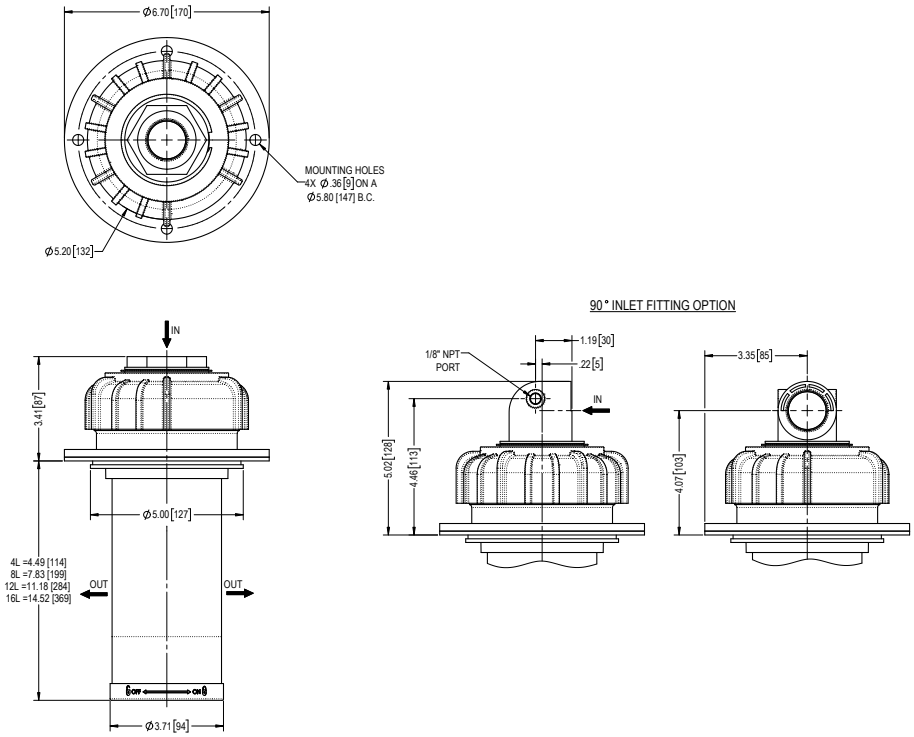

Metric dimensions in (mm).

Element Performance Information & Dirt Holding Capacity

Element	Filtration Ratio Per ISO 4572/NFPA T3.10.8.8 Using automated particle counter (APC) calibrated per ISO 4402			Filtration Ratio wrt ISO 16889 Using APC calibrated per ISO 11171	
	$ß_x \geq 75$	$ß_x \geq 100$	$ß_x \geq 200$	$ß_x(c) \geq 200$	$ß_x(c) \geq 1000$
4LKZ3, 8LKZ3 12LKZ3, 16LKZ3	<1.0	<1.0	<2.0	<4.0	4.8
4LKZ5, 8LKZ5 12LKZ5, 16LKZ5	2.5	3.0	4.0	4.8	6.3
4LKZ10, 8LKZ10 12LKZ10, 16LKZ10	7.4	8.2	4.0	8.0	10.0
4LKZ25, 8LKZ25 12LKZ25, 16LKZ25	18.0	20.0	22.5	19.0	24.0

Element	DHC (gm)	Element	DHC (gm)	Element	DHC (gm)	Element	DHC (gm)
4LKZ3	8	8LKZ3	16	12LKZ3	23	16LKZ3	30
4LKZ5	9	8LKZ5	18	12LKZ5	26	16LKZ5	33
4LKZ10	11	8LKZ10	22	12LKZ10	32	16LKZ10	41
4LKZ25	18	8LKZ25	36	12LKZ25	52	16LKZ25	69

Element Burst Pressure: 86 psi (6 bar)

Flow Direction: Inside Out

Element Nominal Dimensions: 4LKZ: 3.71" (94.23 mm) O.D. x 4.49" (114.05 mm) long
8LKZ: 3.71" (94.23 mm) O.D. x 7.84" (199.14 mm) long
12LKZ: 3.71" (94.23 mm) O.D. x 11.18" (283.97 mm) long
16LKZ: 3.71" (94.23 mm) O.D. x 14.52" (368.81 mm) long

Pressure Drop Information

Based on Flow Rate and Viscosity

$\Delta P_{housing}$

AFT $\Delta P_{housing}$ for fluids with sp gr (specific gravity) = 0.86:

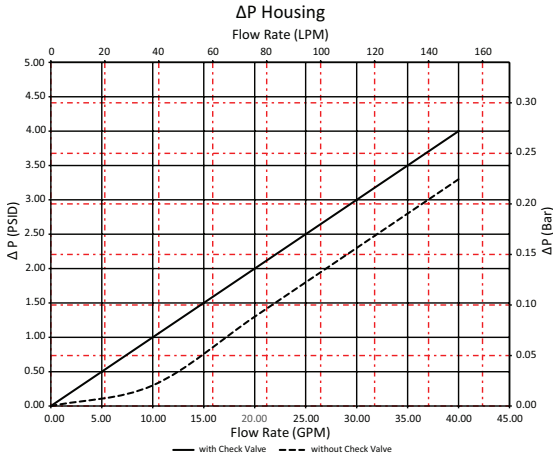

$\Delta P_{element}$

4LKZ

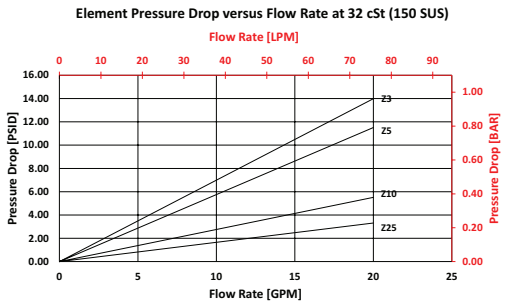

8LKZ

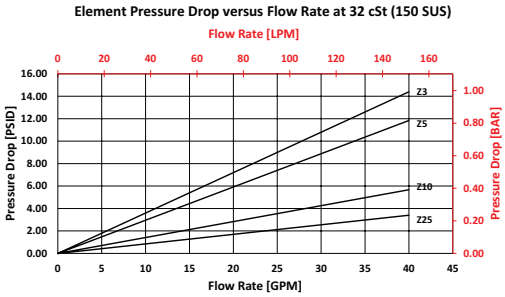

12LKZ

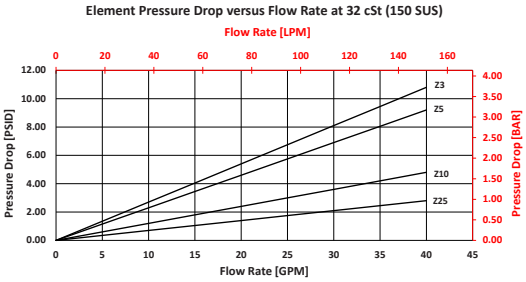

16LKZ

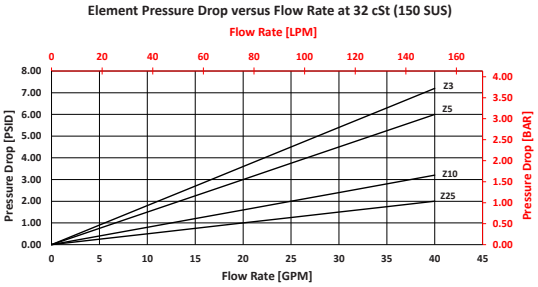

Note: Additional Pressured Drop information available upon request

$$\Delta P_{filter} = \Delta P_{housing} + (\Delta P_{element} * V_f)$$

Exercise:

Determine ΔP_{filter} at 10 gpm (37.9 L/min) for AFT8LKZ10L16Y2 using 160 SUS (34 cSt) fluid.
Use the housing pressure curve to determine $\Delta P_{housing}$ at 10 gpm. In this case, $\Delta P_{housing}$ is 1.5 psi (.10 bar) on the graph for the AFT housing.

Use the element pressure curve to determine $\Delta P_{element}$ at 10 gpm. In this case, $\Delta P_{element}$ is 1.4 psi (.10 bar) according to the graph for the 8LKZ10 element.

Because the viscosity in this sample is 160 SUS (34 cSt), we determine the Viscosity Factor (V_f) by dividing the Operating Fluid Viscosity with the Standard Viscosity of 150 SUS (32 cSt). To best determine your Operating Fluid Viscosity, please reference the chart in Appendix D.

Finally, the overall filter pressure differential, ΔP_{filter}, is calculated by adding $\Delta P_{housing}$ with the true element pressure differential, ($\Delta P_{element} * V_f$). The $\Delta P_{element}$ from the graph has to be multiplied by the viscosity factor to get the true pressure differential across the element.

Solution:

$\Delta P_{housing}$ = 1.5 psi [.10 bar] | $\Delta P_{element}$ = 1.4 psi [.10 bar]

V_f = 160 SUS (34 cSt) / 150 SUS (32 cSt) = 1.1

ΔP_{filter} = 1.5 psi + (1.4 psi * 1.1) = 3.0 psi

OR

ΔP_{filter} = .10 bar + (.10 bar * 1.1) = .21 bar

Air Fusion Technology

Filter Model Number Selection

How to Build a Valid Model Number for a Schroeder AFT:

BOX 1	BOX 2	BOX 3	BOX 4	BOX 5	BOX 6	BOX 7	
AFT –	–	–	–	–	–	–	=

Example: NOTE: One option per box

BOX 1	BOX 2	BOX 3	BOX 4	BOX 5	BOX 6	BOX 7	
AFT –	8LK –	Z10 –	–	L16 –	–	Y2	= AFT8LKZ10L16Y2

BOX 1

Filter Series	
AFT	Air Fusion Technology Filter

BOX 2

Element
4LK = 4″ Element
8LK = 8″ Element
12LK = 12" Element
16LK = 16" Element

BOX 3

Media
Z3 = 3 micron Z media
Z5 = 5 micron Z media
Z10 = 10 micron Z media
Z25 = 25 micron Z media

BOX 4

Seal
Omit = Buna
V = Viton
H = EPR

BOX 5

Porting
S12 = SAE 12
S16 = SAE 16
L12 = 90 Deg SAE 12
L16 = 90 Deg SAE 16
HB16 = 1″ Hose Barb

BOX 6

Bypass
Omit = 25 psi

BOX 7

Check Valve
Omit = Check Valve
N = No Check Valve

BOX 8

Gauge Port Option (Elbow Only)
N = Plugged
Y2 = Tricolor visual indicator (Back Mounted)
Y2C = Tricolor visual indicator (Bottom Mounted)
ES = Electric Switch
ES1 = Heavy Duty Electric Switch
ES2 = Electrical Switch with Deutsch Connector

NOTES:

Box 2. Replacement element part numbers are a combination of Boxes 2, 3 and 4. Example: 8LKZ25V

Box 4. Viton® is a registered trademark of DuPont Dow Elastomers.

Box 7. Check valve prevents hydraulic oil to spill when changing out the element and it is recommended. Not including could reduce differential pressure slightly but risks a greater hydraulic oil spill on element change out.

Air Fusion Technology (Fixed Head)

AFTF

Features and Benefits

- Patent Pending In-tank filter design
- Lightweight and as part of a tank optimization package can reduce reservoir size
- Lock & Key Quality Protected, OEM Specific Interfaces available
- Superior de-aeration performance
- Fixed head connection. Lines stay connected during element changeouts

Part of Schroeder Industries' Energy Sustainability Initiative

40 gpm
151 L/min
100 psi
7 bar

Filter Housing Specifications

Flow Rating:	40 gpm (151 L/min)
Max. Operating Pressure:	100 psi (7 bar)
Min. Yield Pressure:	350 psi (24 bar)
Rated Fatigue Pressure:	100 psi (7 bar)
Temp. Range:	-20°F to 225°F (-29°C to 107°C)
Bypass Setting:	Cracking: 25 psi (1.7 bar)
Element Change Clearance:	4LK = 5.28" [134mm] 8LK = 8.62" [219mm] 12LK = 11.96" [304mm] 16LK = 15.30" [389mm]
Element Case:	12 elements

Fluid Compatibility

Type Fluid	Appropriate Schroeder Media
Petroleum Based Fluids	Z-Media® and ASP® media (synthetic)
High Water Content	All Z-Media® and ASP® media (synthetic)
Invert Emulsions	10 and 25 µ Z-Media® and 10 µ ASP® media (synthetic)
Water Glycols	3, 5, 10 and 25 µ Z-Media® and all ASP® media (synthetic)
Phosphate Esters	All Z-Media® (synthetic) with H (EPR) seal designation and all ASP® media (synthetic)

Air Fusion Technology (Fixed Head)

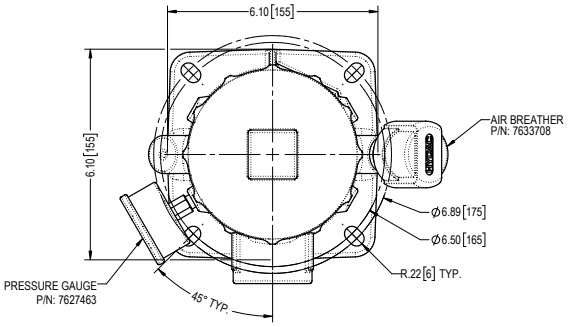

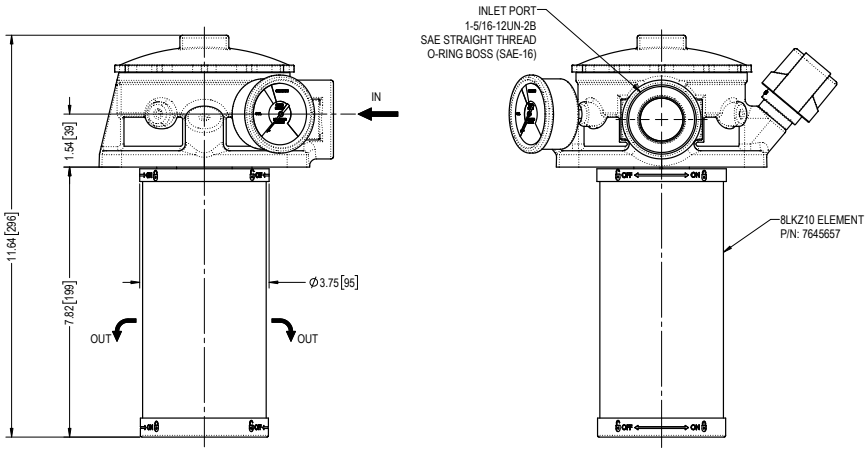

Metric dimensions in (mm).

Element Performance Information & Dirt Holding Capacity

Element	Filtration Ratio Per ISO 4572/NFPA T3.10.8.8 Using automated particle counter (APC) calibrated per ISO 4402			Filtration Ratio wrt ISO 16889 Using APC calibrated per ISO 11171	
	$ß_x \geq 75$	$ß_x \geq 100$	$ß_x \geq 200$	$ß_x(c) \geq 200$	$ß_x(c) \geq 1000$
4LKZ3, 8LKZ3 12LKZ3, 16LKZ3	<1.0	<1.0	<2.0	<4.0	4.8
4LKZ5, 8LKZ5 12LKZ5, 16LKZ5	2.5	3.0	4.0	4.8	6.3
4LKZ10, 8LKZ10 12LKZ10, 16LKZ10	7.4	8.2	4.0	8.0	10.0
4LKZ25, 8LKZ25 12LKZ25, 16LKZ25	18.0	20.0	22.5	19.0	24.0

Element	DHC (gm)	Element	DHC (gm)	Element	DHC (gm)	Element	DHC (gm)
4LKZ3	8	8LKZ3	16	12LKZ3	23	16LKZ3	30
4LKZ5	9	8LKZ5	18	12LKZ5	26	16LKZ5	33
4LKZ10	11	8LKZ10	22	12LKZ10	32	16LKZ10	41
4LKZ25	18	8LKZ25	36	12LKZ25	52	16LKZ25	69

Element Burst Pressure: 86 psi (6 bar)

Flow Direction: Inside Out

Element Nominal Dimensions: 4LKZ: 3.71" (94.23 mm) O.D. x 4.49" (114.05 mm) long
8LKZ: 3.71" (94.23 mm) O.D. x 7.84" (199.14 mm) long
12LKZ: 3.71" (94.23 mm) O.D. x 11.18" (283.97 mm) long
16LKZ: 3.71" (94.23 mm) O.D. x 14.52" (368.81 mm) long

Pressure Drop Information
Based on Flow Rate and Viscosity

$\Delta P_{housing}$

AFT $\Delta P_{housing}$ for fluids with sp gr (specific gravity) = 0.86:

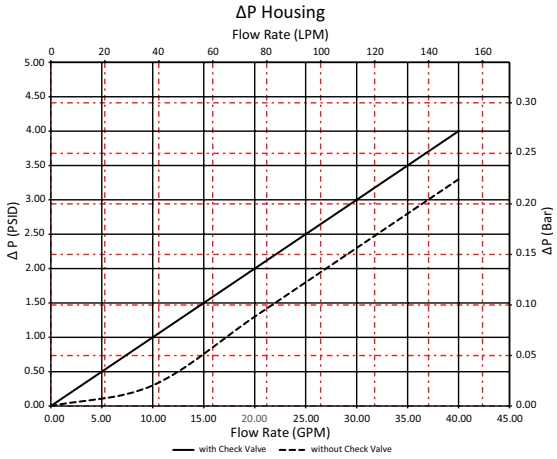

$\Delta P_{element}$

4LKZ

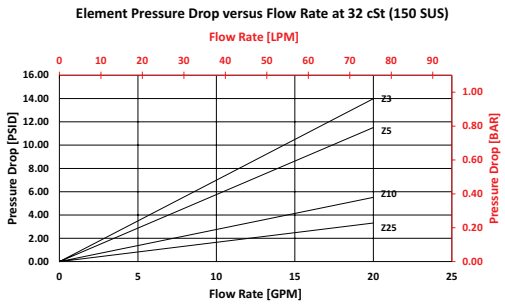

8LKZ

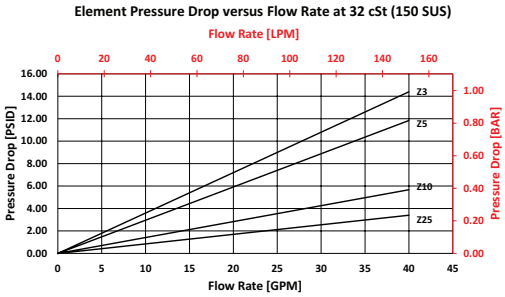

12LKZ

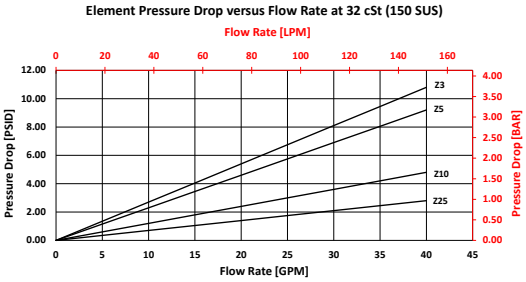

16LKZ

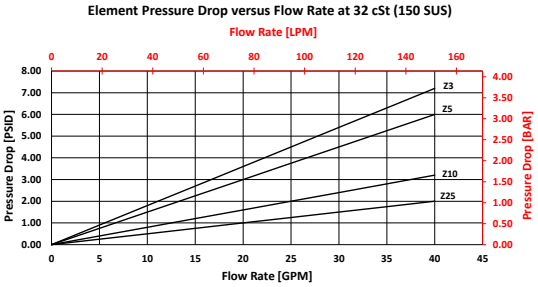

Note: Additional Pressured Drop information available upon request

$$\Delta P_{filter} = \Delta P_{housing} + (\Delta P_{element} * V_f)$$

Exercise:

Determine ΔP_{filter} at 10 gpm (37.9 L/min) for AFT8LKZ10L16Y2 using 160 SUS (34 cSt) fluid.
Use the housing pressure curve to determine $\Delta P_{housing}$ at 10 gpm. In this case, $\Delta P_{housing}$ is 1.5 psi (.10 bar) on the graph for the AFT housing.

Use the element pressure curve to determine $\Delta P_{element}$ at 10 gpm. In this case, $\Delta P_{element}$ is 1.4 psi (.10 bar) according to the graph for the 8LKZ10 element.

Because the viscosity in this sample is 160 SUS (34 cSt), we determine the Viscosity Factor (V_f) by dividing the Operating Fluid Viscosity with the Standard Viscosity of 150 SUS (32 cSt). To best determine your Operating Fluid Viscosity, please reference the chart in Appendix D.

Finally, the overall filter pressure differential, ΔP_{filter}, is calculated by adding $\Delta P_{housing}$ with the true element pressure differential, ($\Delta P_{element} * V_f$). The $\Delta P_{element}$ from the graph has to be multiplied by the viscosity factor to get the true pressure differential across the element.

Solution:

$\Delta P_{housing}$ = 1.5 psi [.10 bar] | $\Delta P_{element}$ = 1.4 psi [.10 bar]

V_f = 160 SUS (34 cSt) / 150 SUS (32 cSt) = 1.1

ΔP_{filter} = 1.5 psi + (1.4 psi * 1.1) = 3.0 psi

OR

ΔP_{filter} = .10 bar + (.10 bar * 1.1) = .21 bar

Air Fusion Technology (Fixed Head)

Filter Model Number Selection

How to Build a Valid Model Number for a Schroeder AFTF:

BOX 1	BOX 2	BOX 3	BOX 4	BOX 5	BOX 6	BOX 7	BOX 8	
AFTF –	–	–	–	–	–	–	B	=

Example: NOTE: One option per box

BOX 1	BOX 2	BOX 3	BOX 4	BOX 5	BOX 6	BOX 7	BOX 8	
AFTF –	8LK –	Z10 –	–	S16 –	–	Y2	B	= AFT8LKZ10S16Y2B

BOX 1

Filter Series	
AFTF	Air Fusion Technology Fixed Head Filter

BOX 2

Element
4LK = 4" Element
8LK = 8" Element
12LK = 12" Element
16LK = 16" Element

BOX 3

Media
Z3 = 3 micron Z media
Z5 = 5 micron Z media
Z10 = 10 micron Z media
Z25 = 25 micron Z media

BOX 4

Seal
Omit = Buna
V = Viton

BOX 5

Porting
S16 = SAE 16

BOX 6

Bypass
Omit = 25 psi

BOX 7

Gauge Port Option
N = Plugged
Y2 = Tricolor visual indicator (Back Mounted)
ES = Electric Switch
ES1 = Heavy Duty Electric Switch
ES2 = Electrical Switch with Deutsch Connector

BOX 8

Breather
B = Breather

NOTES:

Box 2. Replacement element part numbers are a combination of Boxes 2, 3 and 4. Example: 8LKZ25V

Box 4. Viton® is a registered trademark of DuPont Dow Elastomers. All elements for this filter are supplied with Viton® seals.

Tank-Mounted Filter

GPT

Model No. of filter in photograph is GPT15DCLKZ25DF32S24

Features and Benefits

- Filter bypass in cap vs base, cleaner cold start
- Patent Pending In-Tank Design
- Lock & Key Quality Protected

Filter Housing Specifications

Flow Rating:	Up to 175 GPM (662 L/min) FOR 150 SUS (32 cSt) Fluids
Max. Operating Pressure:	150 PSI (10.3 bar)
Min. Yield Pressure:	Consult Factory
Rated Fatigue Pressure:	89 psi (6 bar)
Temp. Range:	-20 F to 225 F (-29 C to 107 C)
Bypass Setting:	Cracking: 35 PSI (2.4 bar)
Ported Head and Cap:	Die Cast Aluminum
Weight:	7 LBS. (3.18 kg)
Element Change Clearance:	20.0" (508 mm)

Fluid Compatibility

Type Fluid:	Appropriate Schroeder Media
High Water Content:	All Z-Media (synthetic)
Invert Emulsions:	10 and 25 micron Z-Media (synthetic)
Water Glycols:	3, 5, 10, and 25 micron Z-Media (synthetic)
Phosphate Esters:	All Z-Media (synthetic) with H (EPR) seal designation

Element Performance Information

Element	Filtration Ratio Per ISO 4572/NFPA T3.10.8.8 Using automated particle counter (APC) calibrated per ISO 4402 $ß_x \geq 75$	Filtration Ratio per ISO 16889 Using APC calibrated per ISO 11171 $ß_x(c) \geq 1000$
15TLKZ3	<4.0	4.8
15TLKZ5	4.8	6.3
15TLKZ10	8.0	10.0
15TLKZ25	19.0	24.0

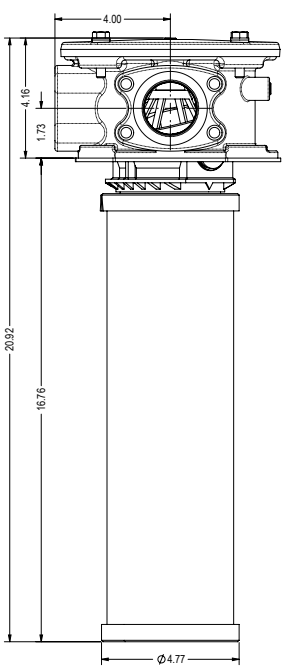

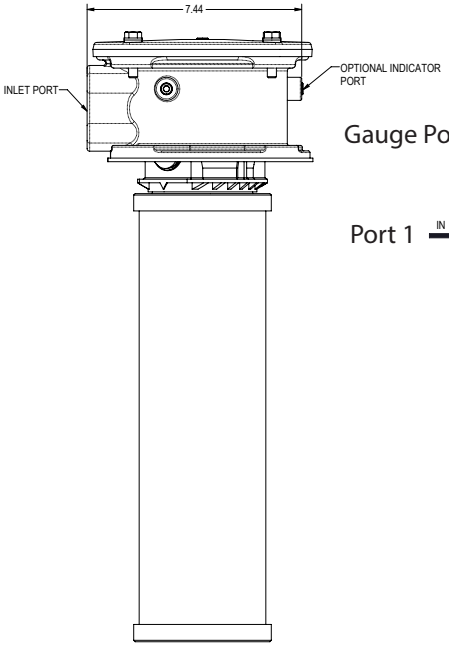

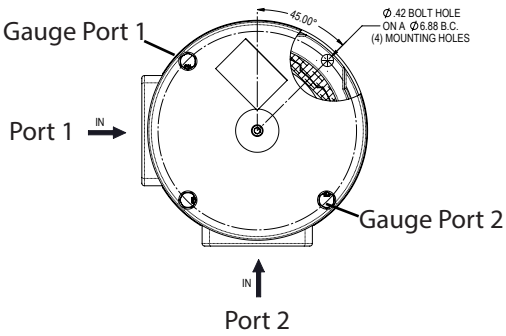

Tank-Mounted Filter

GPT

Pressure Drop Information Based on Flow Rate & Viscosity

Element	ΔP	Housing	ΔP
15TLKZ3	0.09	0 GPM	0
15TLKZ5	0.08	50 GPM	0.5
15TLKZ10	0.06	100 GPM	1
15TLKZ25	0.05	150 GPM	1.5
		200 GPM	2.0

Element Dirt Holding Capacity

Element	DHC (gm)
15TLKZ3	234
15TLKZ5	259
15TLKZ10	231
15TLKZ25	312

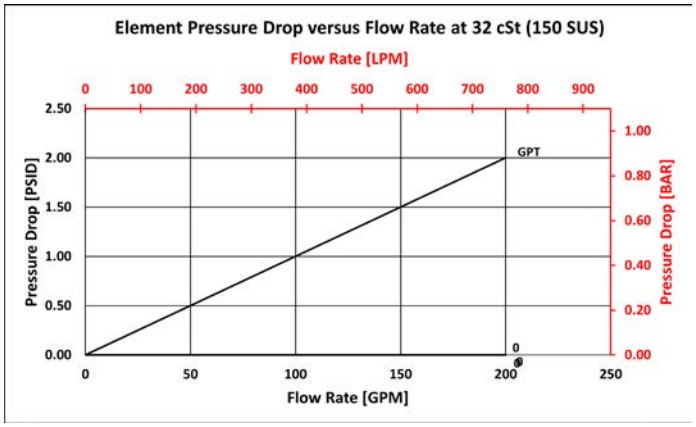

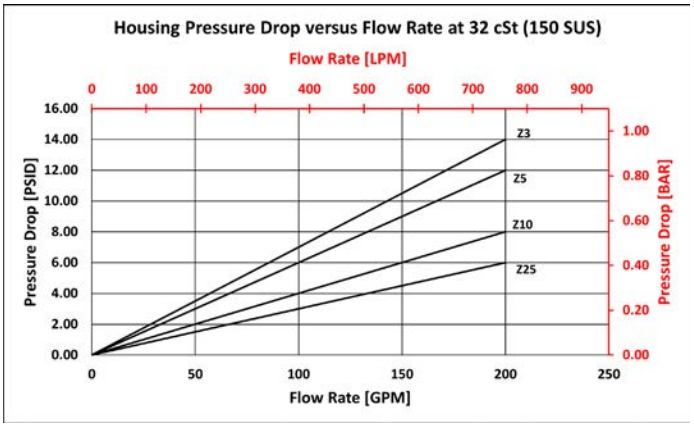

How to Build a Valid Model Number for a Schroeder GPT:

GPT	[ ] –	[ ] –	[ ]
	Element	Porting	Indicator

Element	Element	Media	Micron Rating	Seals
Note: Element code can also be used to build a replacement element.	**15DCLK =** 15" Element	**Z =** Excellement Z-Media (synthetic) Note: Other media is available upon request.	**3 =** 3 Micron **5 =** 5 Micron **10 =** 10 Micron **25 =** 25 Micron	**Omit =** Buna **V =** Viton **H =** EPR

Porting	Porting	Block Port Options	Bypass
	DF32S24	**Omit =** None **N1 =** Block Port 1 **N2 =** Block Port 2	**Omit =** 35 PSI Cracking

Indicator	Indicator Location
Omit = None **Y2 =** Tricolor Visual Indicator (Back Mounted) **Y2C=** Tricolor Visual Indicator (Bottom Mounted) **ES5 =** Electric Switch with 3-Pin Deutsch Connector	**Omit =** No Indicator **P1 =** Gauge Port 1 **P2 =** Gauge Port 2

The 15DCLK element assembly is made up of the GPT diverter cap and the 15TLK element.
A list of model code pairings is shown below:

15DCLKZ10,ELEMENT = DIVERTER, ASSY, GPT, BUNA + 15TLKZ10, ELEMENT
15DCLKZ25,ELEMENT = DIVERTER, ASSY, GPT, BUNA + 15TLKZ25, ELEMENT
15DCLKZ3,ELEMENT = DIVERTER, ASSY, GPT, BUNA + 15TLKZ3, ELEMENT
15DCLKZ5,ELEMENT = DIVERTER, ASSY, GPT, BUNA + 15TLKZ5, ELEMENT

15DCLKZ10 GPT Diverter 15TLKZ10

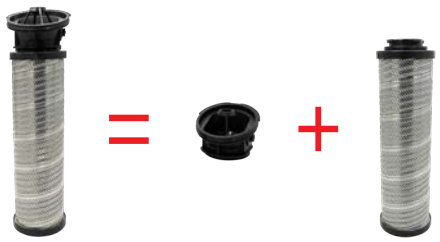

Tank-Mounted Filter KFT

Model No. of filter in photograph is KFT1K10P24P24NB

Features and Benefits

- Low pressure tank-mounted filter
- Meets HF4 automotive standard
- Multiple inlet/outlet porting options
- Top, side or bottom mounting
- Optional check valve prevents reservoir siphoning
- Can also be used in return line application (contact factory)
- Double stacking of K-size element can be replaced by single KK element
- Allows consolidation of inventoried replacement elements by using K-size elements
- Also available with DirtCatcher® elements (KD and KKD)

100 gpm
380 L/min
100 psi
7 bar

Filter Housing Specifications

Flow Rating:	Up to 100 gpm (380 L/min) for 150 SUS (32 cSt) fluids
Max. Operating Pressure:	100 psi (7 bar)
Min. Yield Pressure:	400 psi (28 bar), per NFPA T2.6.1
Rated Fatigue Pressure:	Contact Factory
Temp. Range:	-20°F to 225°F (-29°C to 107°C)
Bypass Setting:	Cracking: 25 psi (1.7 bar) Full Flow: 48 psi (3.3 bar)
Porting Head: Porting Cap: Element Case:	Steel Die Cast Aluminum (standard); Steel (optional) Steel
Weight of KFT-1K: Weight of KFT-2K:	10.0 lbs. (4.5 kg) 13.6 lbs. (6.2 kg)
Element Change Clearance:	8.0" (205 mm) for 1K; 17.50" (445 mm) for KK; 26.5" (673 mm) for 27K

Fluid Compatibility

Type Fluid	Appropriate Schroeder Media
Petroleum Based Fluids	All E media (cellulose), Z-Media® and ASP® media (synthetic)
High Water Content	All Z-Media and ASP® media (synthetic)
Invert Emulsions	10 and 25 µ Z-Media® (synthetic), 10 µ ASP® media (synthetic)
Water Glycols	3, 5, 10 and 25 µ Z-Media® (synthetic), 3, 5 and 10 µ ASP® media (synthetic)
Phosphate Esters	All Z-Media® (synthetic) with H (EPR) seal designation, ASP® media (synthetic) and 3 and 10 µ E media (cellulose) with H (EPR) seal designation
Skydrol®	3, 5, 10 and 25 µ Z-Media® (synthetic) with H.5 seal designation, ASP® media (synthetic) (EPR seals and stainless steel wire mesh in element, and light oil coating on housing exterior)

Tank-Mounted Filter

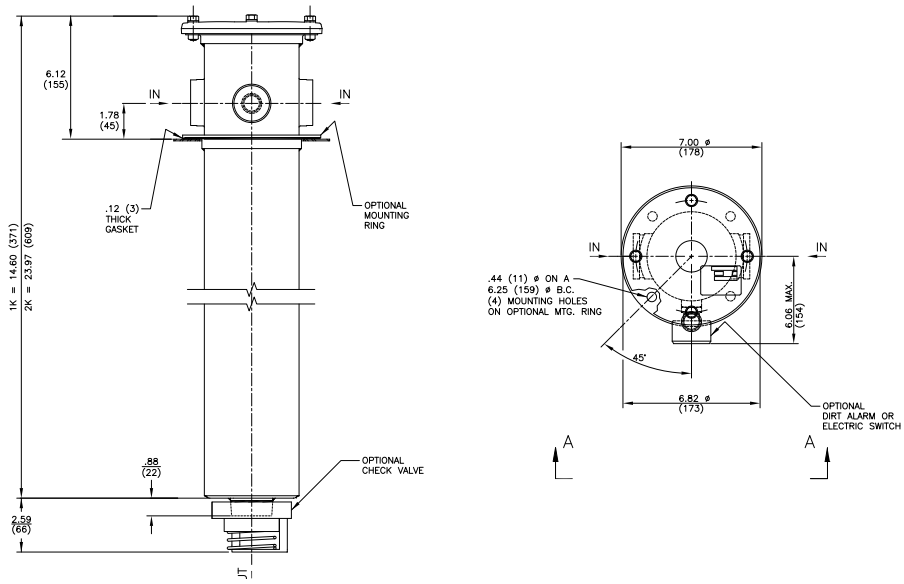

Metric dimensions in ( ).

Element Performance Information & Dirt Holding Capacity

Element	Filtration Ratio Per ISO 4572/NFPA T3.10.8.8 Using automated particle counter (APC) calibrated per ISO 4402			Filtration Ratio per ISO 16889 Using APC calibrated per ISO 11171	
	$ß_x \geq 75$	$ß_x \geq 100$	$ß_x \geq 200$	$ß_x(c) \geq 200$	$ß_x(c) \geq 1000$
KZ1/KKZ1	<1.0	<1.0	<1.0	<4.0	4.2
KZ3/KKZ3/KAS3/KKAS3	<1.0	<1.0	<2.0	<4.0	4.8
KZ5/KKZ5/KAS5/KKAS5	2.5	3.0	4.0	4.8	6.3
KZ10/KKZ10/KAS10/KKAS10	7.4	8.2	10.0	8.0	10.0
KZ25/KKZ25	18.0	20.0	22.5	19.0	24.0

Element	DHC (gm)	Element	DHC (gm)	Element	DHC (gm)	Element	DHC (gm)
KZ1	112	KKZ1	224	KDZ1	89	KKDZ1	188
KZ3/KAS3	115	KKZ3/KKAS3	230	KDZ3	71	KKDZ3	150
KZ5/KAS5	119	KKZ5/KKAS5	238	KDZ5	100	KKDZ5	210
KZ10/KAS10	108	KKZ10/KKAS10	216	KDZ10	80	KKDZ10	168
KZ25	93	KKZ25	186	KDZ25	81	KKDZ25	171

Element Collapse Rating: 150 psid (10 bar) for standard elements

Flow Direction: Outside In

Element Nominal Dimensions: K: 3.9" (99 mm) O.D. x 9.0" (230 mm) long
KK: 3.9" (99 mm) O.D. x 18.0" (460 mm) long

Pressure Drop Information

Based on Flow Rate and Viscosity

$\Delta P_{housing}$

KFT $\Delta P_{housing}$ for fluids with sp gr (specific gravity) = 0.86:

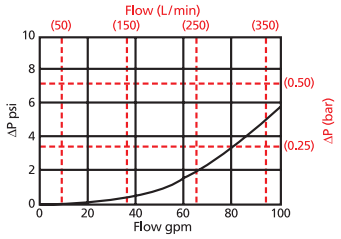

$\Delta P_{element}$

KZ

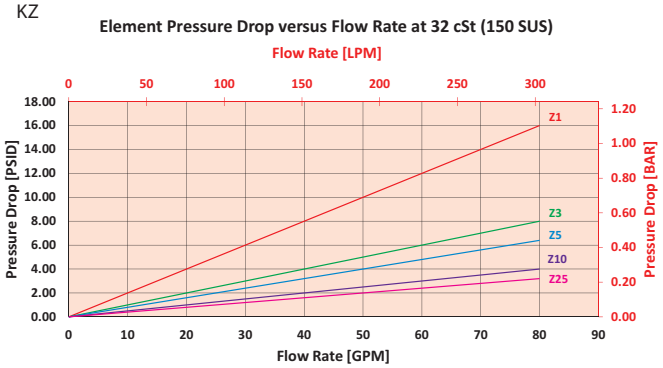

KKZ/2KZ

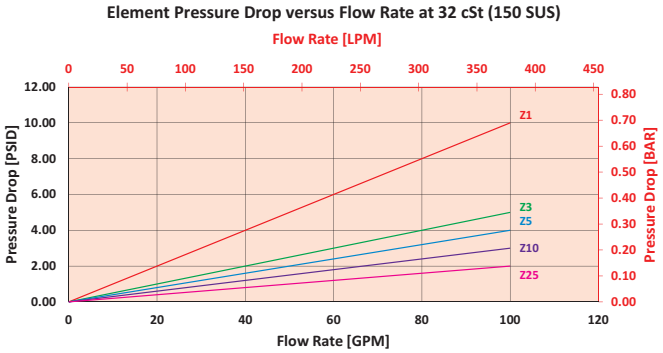

$$\Delta P_{filter} = \Delta P_{housing} + (\Delta P_{element} * V_f)$$

Exercise:

Determine ΔP_{filter} at 80 gpm (303.2 L/min) for KFT1KZ10S24S24NY2G820 using 160 SUS (34 cSt) fluid.

Use the housing pressure curve to determine $\Delta P_{housing}$ at 80 gpm. In this case, $\Delta P_{housing}$ is 3.5 psi (.24 bar) on the graph for the KFT housing.

Use the element pressure curve to determine $\Delta P_{element}$ at 80 gpm. In this case, $\Delta P_{element}$ is 4 psi (.27 bar) according to the graph for the KZ10 element.

Because the viscosity in this sample is 200 SUS (24 cSt), we determine the Viscosity Factor (V_f) by dividing the Operating Fluid Viscosity with the Standard Viscosity of 150 SUS (32 cSt). To best determine your Operating Fluid Viscosity, please reference the chart in Appendix D.

Finally, the overall filter pressure differential, ΔP_{filter}, is calculated by adding $\Delta P_{housing}$ with the true element pressure differential, ($\Delta P_{element} * V_f$). The $\Delta P_{element}$ from the graph has to be multiplied by the viscosity factor to get the true pressure differential across the element.

Solution:

$\Delta P_{housing}$ = 3.5 psi [.24 bar] | $\Delta P_{element}$ = 4 psi [.27 bar]

V_f = 160 SUS (34 cSt) / 150 SUS (32 cSt) = 1.1

ΔP_{filter} = 3.5 psi + (4 psi * 1.1) = 7.9 psi

OR

ΔP_{filter} = .24 bar + (.27 bar * 1.1) = .54 bar

Note:
If your element is not graphed, use the following equation:
$\Delta P_{element}$ = Flow Rate x ΔP_f Plug this variable into the overall pressure drop equation.

Ele.	ΔP	Ele.	ΔP	Ele.	ΔP
K3	0.25	2K3/ KK3	0.12	3KZ1/ 27KZ1	0.05
K10	0.09	2K10/ KK10	0.05	3KZ3/ 27KZ3	0.03
K25	0.02	2K25/ KK25	0.01	3KZ5/ 27KZ5	0.02
KAS3	0.10	2KAS3/ KKAS3	0.05	3KZ10/ 27KZ10	0.02
KAS5	0.08	2KAS5/ KKAS5	0.04	3KZ25/ 27KZ25	0.01
KAS10	0.05	2KAS10/ KKAS10	0.03	3K3	0.08
KDZ1	0.24	2KDZ1	0.12	3K10	0.03
KDZ3	0.12	2KDZ3	0.06	3K25	0.01
KDZ5	0.10	2KDZ5	0.05	3KAS3/ 27KAS3	0.03
KDZ10	0.06	2KDZ10	0.03	3KAS5/ 27KAS5	0.02
KDZ25	0.04	2KDZ25	0.02	3KAS10/ 27KAS10	0.02

KFT Tank-Mounted Filter

Filter Model Number Selection

How to Build a Valid Model Number for a Schroeder KFT:

BOX 1	BOX 2	BOX 3	BOX 4	BOX 5	BOX 6	BOX 7	BOX 8	BOX 9	BOX 10
KFT									

Example: NOTE: One option per box

BOX 1	BOX 2	BOX 3	BOX 4	BOX 5	BOX 6	BOX 7	BOX 8	BOX 9	BOX 10	
KFT	1K	Z	10		S24 S24 N			Y2	G820	= KFT1KZ10S24S 24NY2G820

BOX 1

Filter Series
KFT

BOX 2

Element Size and Length	
1	K, KK
2	K

BOX 3

Media Type	
Omit	= E media (cellulose)
Z	= Excellement® Z-Media® (synthetic)
AS	= Anti-Static Pleat Media (synthetic)
ZW	= Aqua-Excellement™ ZW media
DZ	= DirtCatcher® with Excellement® Z-Media®

BOX 4

Element Part Number	
1	= 1 µ Z, ZW, and DZ media
3	= 3 µ AS,E, Z, ZW, and DZ media
5	= 5 µ AS, Z, ZW, and DZ media
10	= 10 µ AS, E, M, Z, ZW, and DZ media
25	= 25 µ E, M, Z, ZW, and DZ media

BOX 5

Seal Material	
Omit	= Buna N
H	= EPR
H.5	= Skydrol® Compatibility

BOX 6 Specification of all 4 ports is required

Inlet Porting			
Port 1 (Standard)	Port 2 (Optional)	Port 3 (Optional)	Port 4 (Optional)
N = None	N = None	N = None	N = None
			P2 = 1/8" NPTF
		P8 = ½" NPTF	P8 = ½" NPTF
P12 = ¾" NPTF	P12 = ¾" NPTF	P12 = ¾" NPTF	P12 = ¾" NPTF
P16 = 1" NPTF	P16 = 1" NPTF	P16 = 1" NPTF	P16 = 1" NPTF
P20 = 1¼" NPTF	P20 = 1¼" NPTF	P20 = 1¼" NPTF	P20 = 1¼" NPTF
P24 = 1½" NPTF	P24 = 1½" NPTF	P24 = 1½" NPTF	P24 = 1½" NPTF
P32 = 2" NPTF	P32 = 2" NPTF	P32 = 2" NPTF	P32 = 2" NPTF
S8 = SAE-8	S8 = SAE-8	S8 = SAE-8	S8 = SAE-8
S12 = SAE-12	S12 = SAE-12	S12 = SAE-12	S12 = SAE-12
S16 = SAE-16	S16 = SAE-16	S16 = SAE-16	S16 = SAE-16
S20 = SAE-20	S20 = SAE-20	S20 = SAE-20	S20 = SAE-20
S24 = SAE-24	S24 = SAE-24	S24 = SAE-24	S24 = SAE-24

Inlet Porting Location

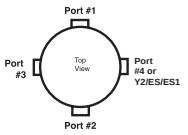

BOX 7

Outlet Porting Options	
Omit	= 1½" NPT male
C	= Check valve
D	= Diffuser
CD	= Check valve & diffuser
T	= 13" Tube extension
A	= Non-threaded outlet

BOX 8

Optional Mounting Flange	
Omit	= None
B	= Flange with 4 holes
BW	= Flange with no holes

BOX 9

Dirt Alarm® Options		
	Omit =	None
Visual	Y2 =	Back-mounted tri-color gauge (located in Port 4)
	Y2C =	Bottom-mounted tri-color gauge in cap
	Y5 =	Back-mounted gauge in cap
Electrical	ES =	Electric switch (located in port 4)
	ES1 =	Heavy-duty electric switch with conduit connector (located in port 4)
	ES2 =	Electrical Switch with Deutsch Connector

BOX 10

Additional Options	
Omit	= None
G2293	= Cork gasket
G820	= Steel cap

NOTES:

Box 2. Number of elements must equal 1 when using KK elements.

Box 3. Replacement element part numbers are identical to contents of Boxes 2, 3, 4 and 5. K specifies one 9" element; KK specifies one 18" element. Example: KKZ10

Box 5. H.5 seal designation includes the following: EPR seals, stainless steel wire mesh on elements, and light oil coating on housing exterior. Skydrol® is a registered trademark of Solutia Inc. Viton® is a registered trademark of DuPont Dow Elastomers.

Box 7. See also "Accessories for Tank-Mounted Filters," page 307.

Box 9. YC2 and Y5 are not available with the G820.

Tank-Mounted Filter RT

Model No. of filter in photograph is RT1K10S24NP16Y2.

Features and Benefits

- Low pressure tank-mounted filter with up to 3 inlet ports
- Meets HF4 automotive standard
- Top, side or bottom mounting
- Optional check valve prevents reservoir siphoning
- RTW model allows filter to be welded to tank, instead of being bolted
- Double and triple stacking of K-size element can be replaced by single KK or 27K-size element
- Also available with new DirtCatcher® elements (KDZ and KKDZ)
- Various Dirt Alarm® options
- Allows consolidation of inventoried replacement elements by using K-size elements
- Available with quality-protected GeoSeal® G Elements (GRT)
- Same day shipment model available

100 gpm
380 L/min
100 psi
7 bar

Filter Housing Specifications

Flow Rating:	Up to 100 gpm (380 L/min) for 150 SUS (32 cSt) fluids
Max. Operating Pressure:	100 psi (7 bar)
Min. Yield Pressure:	400 psi (28 bar), per NFPA T2.6.1
Rated Fatigue Pressure:	90 psi (6 bar), per NFPA T2.6.1-2005
Temp. Range:	-20°F to 225°F (-29°C to 107°C)
Bypass Setting:	Cracking: 25 psi (1.7 bar) Full Flow: 48 psi (3.3 bar)
Porting Head & Cap: Element Case:	Die Cast Aluminum Steel
Weight of RT-1K: Weight of RT-2K:	11.4 lbs. (5.2 kg) 14.5 lbs. (6.6 kg)
Element Change Clearance:	8.0" (205 mm) for 1K; 17.50" (445 mm) for KK; 26.5" (673 mm) for 27K

Fluid Compatibility

Type Fluid	Appropriate Schroeder Media
Petroleum Based Fluids	All E media (cellulose), Z-Media® and ASP® media (synthetic)
High Water Content	All Z-Media® and all ASP® media (synthetic)
Invert Emulsions	10 and 25 µ Z-Media® and 10 µ ASP® media (synthetic)
Water Glycols	3, 5, 10 and 25 µ Z-Media® and all ASP® media (synthetic)
Phosphate Esters	All Z-Media® (synthetic) with H (EPR) seal designation and 3 and 10 µ E media (cellulose) with H (EPR) seal designation and all ASP® Media (synthetic)
Skydrol®	3, 5, 10 and 25 µ Z-Media® (synthetic) with H.5 seal designation (EPR seals and stainless steel wire mesh in element, and light oil coating on housing exterior) and all ASP® media (synthetic)

Tank-Mounted Filter

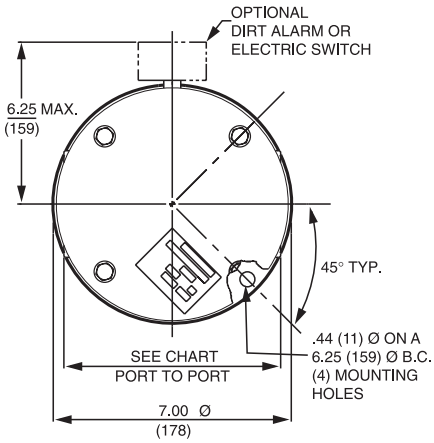

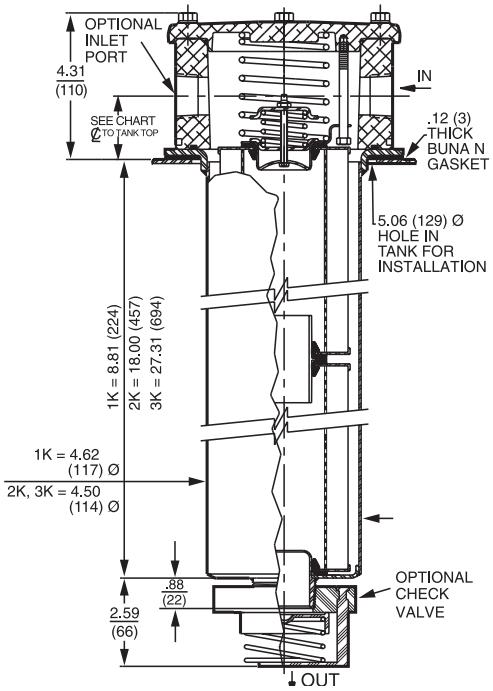

	1½" Ports 4-Bolt Flange Only	2" Ports	All Other Porting
Port to Port	7.12"	7.56" (P, S, B) 7.38" (F)	6.38"
℄ to Casting Base	1.75"	1.81"	1.56"
℄ to Tank Top	2.06"	2.12"	1.88"

Optional mounting rings available for tank welding. See page 307, reference part numbers A-LFT-813 and A-LFT-1448.

Metric dimensions in ( ).

Element Performance Information & Dirt Holding Capacity

Element	Filtration Ratio Per ISO 4572/NFPA T3.10.8.8 Using automated particle counter (APC) calibrated per ISO 4402			Filtration Ratio per ISO 16889 Using APC calibrated per ISO 11171	
	$ß_x \geq 75$	$ß_x \geq 100$	$ß_x \geq 200$	$ß_{x(c)} \geq 200$	$ß_{x(c)} \geq 1000$
KZ1/KKZ1/27KZ1	<1.0	<1.0	<1.0	<4.0	4.2
KZ3/KKZ3/27KZ3	<1.0	<1.0	<2.0	<4.0	4.8
KZ5/KKZ5/27KZ5	2.5	3.0	4.0	4.8	6.3
KZ10/KKZ10/27KZ10	7.4	8.2	10.0	8.0	10.0
KZ25/KKZ25/27KZ25	18.0	20.0	22.5	19.0	24.0
KZW1	N/A	N/A	N/A	<4.0	<4.0
KZW3/KKZW3	N/A	N/A	N/A	4.0	4.8
KZW5/KKZW5	N/A	N/A	N/A	5.1	6.4
KZW10/KKZW10	N/A	N/A	N/A	6.9	8.6
KZW25/KKZW25	N/A	N/A	N/A	15.4	18.5

Element	DHC (gm)	Element	DHC (gm)	Element	DHC (gm)	Element	DHC (gm)	Element	DHC (gm)	Element	DHC (gm)	Element	DHC (gm)
KZ1	112	KKZ1	224	27KZ1	336	KDZ1	89	KKDZ1	188	KZW1	61		
KZ3	115	KKZ3	230	27KZ3	345	KDZ3	71	KKDZ3	150	KZW3	64	KKZW3	128
KZ5	119	KKZ5	238	27KZ5	357	KDZ5	100	KKDZ5	210	KZW5	63	KKZW5	126
KZ10	108	KKZ10	216	27KZ10	324	KDZ10	80	KKDZ10	168	KZW10	57	KKZW10	114
KZ25	93	KKZ25	186	27KZ25	279	KDZ25	81	KKDZ25	171	KZW25	79	KKZW25	158

Element Collapse Rating: 150 psid (10 bar) for standard elements

Flow Direction: Outside In See RTI, page 275 for inside out flow version.

Element Nominal Dimensions: K: 3.9" (99 mm) O.D. x 9.0" (230 mm) long
KK: 3.9" (99 mm) O.D. x 18.0" (460 mm) long
27K: 3.9" (99 mm) O.D. x 27.0" (690 mm) long

$\Delta P_{housing}$

RT $\Delta P_{housing}$ for fluids with sp gr (specific gravity) = 0.86:

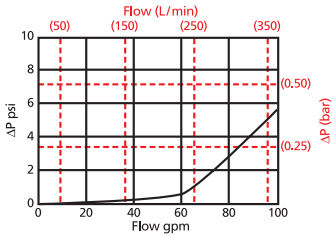

$\Delta P_{element}$

KZ

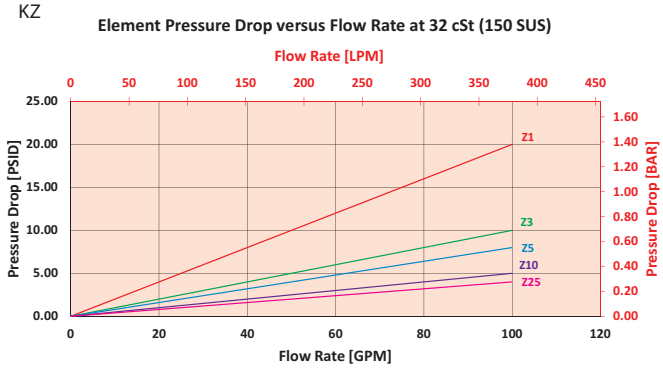

2KZ/KKZ

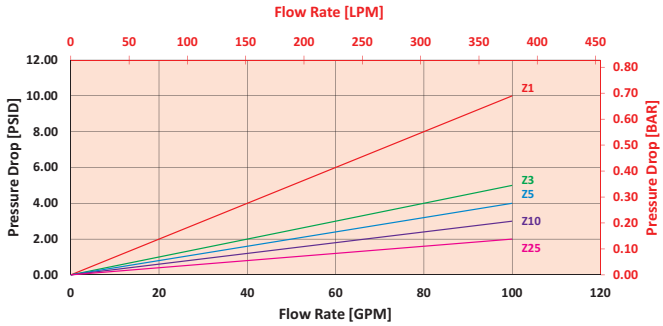

$$\Delta P_{filter} = \Delta P_{housing} + (\Delta P_{element} * V_f)$$

Exercise:

Determine ΔP_{filter} at 80 gpm (303.2 L/min) for RT1KZ10S24S24NY2 using 160 SUS (34 cSt) fluid.

Use the housing pressure curve to determine $\Delta P_{housing}$ at 80 gpm. In this case, $\Delta P_{housing}$ is 3 psi (.21 bar) on the graph for the RT housing.

Use the element pressure curve to determine $\Delta P_{element}$ at 80 gpm. In this case, $\Delta P_{element}$ is 4 psi (.27 bar) according to the graph for the KZ10 element.

Because the viscosity in this sample is 160 SUS (34 cSt), we determine the Viscosity Factor (V_f) by dividing the Operating Fluid Viscosity with the Standard Viscosity of 150 SUS (32 cSt). To best determine your Operating Fluid Viscosity, please reference the chart in Appendix D.

Finally, the overall filter pressure differential, ΔP_{filter}, is calculated by adding $\Delta P_{housing}$ with the true element pressure differential, ($\Delta P_{element} * V_f$). The $\Delta P_{element}$ from the graph has to be multiplied by the viscosity factor to get the true pressure differential across the element.

Solution:

$\Delta P_{housing}$ = 3 psi [.21 bar] | $\Delta P_{element}$ = 4 psi [.27 bar]

V_f = 160 SUS (34 cSt) / 150 SUS (32 cSt) = 1.1

ΔP_{filter} = 3 psi + (4 psi * 1.1) = 7.4 psi

OR

ΔP_{filter} = .21 bar + (.27 bar * 1.1) = .51 bar

Pressure Drop Information

Based on Flow Rate and Viscosity

Note:
If your element is not graphed, use the following equation:
$\Delta P_{element}$ = Flow Rate x $\Delta P_{f.}$ Plug this variable into the overall pressure drop equation.

Ele.	ΔP	Ele.	ΔP	Ele.	ΔP
K3	0.25	2K3/ KK3	0.12	3KZ1/ 27KZ1	0.05
K10	0.09	2K10/ KK10	0.05	3KZ3/ 27KZ3	0.03
K25	0.02	2K25/ KK25	0.01	3KZ5/ 27KZ5	0.02
KAS3	0.10	2KAS3/ KKAS3	0.05	3KZ10/ 27KZ10	0.02
KAS5	0.08	2KAS5/ KKAS5	0.04	3KZ25/ 27KZ25	0.01
KAS10	0.05	2KAS10/ KKAS10	0.03	3K3	0.08
KDZ1	0.24	2KDZ1	0.12	3K10	0.03
KDZ3	0.12	2KDZ3	0.06	3K25	0.01
KDZ5	0.10	2KDZ5	0.05	3KAS3/ 27KAS3	0.03
KDZ10	0.06	2KDZ10	0.03	3KAS5/ 27KAS5	0.02
KDZ25	0.04	2KDZ25	0.02	3KAS10/ 27KAS10	0.02
KZW1	0.43	2KZW1	-		
KZW3	0.32	2KZW3/ KKZW3	0.16		
KZW5	0.28	2KZW5/ KKZW5	0.14		
KZW10	0.23	2KZW10/ KKZW10	0.12		
KZW25	0.14	2KZW25/ KKZW25	0.07		

RT Tank-Mounted Filter

Filter Model Number Selection

Highlighted product eligible for QuickDelivery

How to Build a Valid Model Number for a Schroeder RT:

BOX 1	BOX 2	BOX 3	BOX 4	BOX 5	BOX 5	BOX 6A	BOX 6B	BOX 7	BOX 8
RT									

Example: NOTE: Only box 9 may contain more than one option

BOX 1	BOX 2	BOX 3	BOX 4	BOX 5	BOX 6	BOX 7A	BOX 7B	BOX 8	BOX 9	
RT	1K	Z	10		S24 S24 N			Y2		= RT1KZ10S24S24Y2

BOX 1

Filter Series
RT
RTW
GRT

BOX 2

Element Size & Length	
1K	KK, 27K
2K	
3K	
GeoSeal®	
1KBG	KKBG, 27KBG
2KBG	
3KBG	

BOX 3

Media Type
Omit = E media (cellulose)
Z = Excellement® Z-Media® (synthetic)
AS = Anti-Static Pleat Media (synthetic)
ZW = Aqua-Excellement™ ZW media
DZ = Dirtcatcher® with Excellement® Z-Media®
W = W media (water removal)
M = M media (reusable metal mesh)

BOX 4

Element Part Number
1 = 1 µ Z, ZW, and DZ media
3 = 3 µ AS,E, Z, ZW, and DZ media
5 = 5 µ AS, Z, ZW, and DZ media
10 = 10 µ AS, E, M, Z, ZW, and DZ media
25 = 25 µ E, M, Z, ZW, and DZ media
60 = 60 µ M media

BOX 5

Seal Material
Omit = Buna N
H = EPR
W = Anodized Aluminum Parts
H.5 = Skydrol® compatibility

BOX 6
Specification of all 3 ports is required

Inlet Porting		
Port A	Port B	Port C
P16 = 1" NPTF	N = None	N = None
P20 = 1¼" NPTF	P16 = 1" NPTF	P2 = ⅛" NPTF
P24 = 1½" NPTF	P20 = 1¼" NPTF	P16 = 1" NPTF
P32 = 2" NPTF	P24 = 1½" NPTF	S16 = SAE-16
S16 = SAE-16	P32 = 2" NPTF	
S20 = SAE-20	S16 = SAE-16	
S24 = SAE-24	S20 = SAE-20	
S32 = SAE-32	S24 = SAE-24	
F20 = 1¼" SAE 4-bolt flange Code 61	S32 = SAE-32	
F24 = 1½" SAE 4-bolt flange Code 61	F20 = 1¼" SAE 4-bolt flange Code 61	
F32 = 2" SAE 4-bolt flange Code 61	F24 = 1½" SAE 4-bolt flange Code 61	
B24 = ISO 228 G-1½"	F32 = 2" SAE 4-bolt flange Code 61	
Flange port option only:		
M = Metric SAE 4 bolt flange	B24 = ISO 228 G-1½"	

Inlet Porting Location

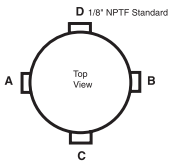

BOX 7A

Bypass Option
Omit = 25 psi bypass setting
RT and RTW models only:
40 = 40 psi bypass setting
50 = 50 psi bypass setting

BOX 7B

Outlet Porting Options
Omit = 1½" NPT male
C = Check valve
D = Diffuser
CD = Check Valve & Diffuser
T = 13" Tube ext.
A = Non-thread outlet

BOX 8

Dirt Alarm® Options		
		Omit = None
Located @ Port D	Visual	Y2 = Back-mounted tri-color gauge
	Electrical	ES = Electric Switch ES1 = Electric Switch with 24" wire leads ES2 = Electrical Switch with Deutsch Connector ES3 = Electric switch with DIN connector ES4 = Skydrol Compatible Electric Switch
Located in cap	Visual	Y2C = Bottom-mounted tri-color gauge Y5 = Back-mounted gauge in cap
Located @ Port C	Visual	Y2R = Back-mounted gauge mounted on opposite side of standard location
	Electrical	ESR = Electric switch mounted on opposite side of standard location ES1R = Heavy-duty electric switch mounted on opposite side of standard location

BOX 9

Add. Options
Omit = None
G2293 = Cork gasket
G547 = Two ⅛" gauge ports
G820 = Stamped cap

NOTES:

Box 1. RTW allows filter to be welded to tank instead of bolted.

Box 2. Number of elements must equal 1 when using KK or 27K elements.

Box 3. Replacement element part numbers are identical to contents of Boxes 2, 3, 4, and 5. Double and triple stacking of K-size elements can be replaced by single KK and 27K elements, respectively. ZW media not available in 27K length.

Box 5. For options H, W, and H.5 all aluminum parts are anodized. H.5 seal designation includes the following: EPR seals, stainless steel wire mesh on elements, and light oil coating on housing exterior. Skydrol® is a registered trademark of Solutia Inc.

Box 6. If using Port B, Port A & B must always be the same type and size. Example: (A) P20 (B) P20 (C) P16

Box 7B. See also "Accessories for Tank-Mounted Filters," page 307.

Tank-Mounted Filter (Inside Out Flow)

RTI

Model No. of filter in photograph is RTI3KZ10S24NP16Y2.

Features and Benefits

- Tank-mounted "Inside Out" flow filter
- Up to 3 inlet ports available
- Offered in pipe, SAE straight thread and flanged porting
- Various Dirt Alarm® options

120 gpm
455 L/min

100 psi
7 bar

Filter Housing Specifications

Flow Rating:	Up to 120 gpm (455 L/min) for 150 SUS (32 cSt) fluids
Max. Operating Pressure:	100 psi (7 bar)
Min. Yield Pressure:	400 psi (28 bar), per NFPA T2.6.1
Rated Fatigue Pressure:	Contact factory
Temp. Range:	-20°F to 225°F (-29°C to 107°C)
Bypass Setting:	Cracking: 25 psi (2 bar) Full Flow: 62 psi (4.3 bar)
Porting Head & Cap: Element Case:	Die Cast Aluminum Steel
Weight of RTI-KI: Weight of RTI-KKI:	11.4 lbs. (5.2 kg) 14.5 lbs. (6.6 kg)
Element Change Clearance:	KI Element = 9.0 (229 mm) KKI Element = 18.0 (457 mm) 27KI Element = 27.0 (686 mm)

Fluid Compatibility

Type Fluid	Appropriate Schroeder Media
Petroleum Based Fluids	All E media (cellulose), Z-Media® and ASP® media (synthetic)
High Water Content	All Z-Media® and ASP® media (synthetic)
Invert Emulsions	10 and 25 µ Z-Media® and 10 µ ASP® media (synthetic)
Water Glycols	3, 5, 10 and 25 µ Z-Media® and all ASP® media (synthetic)
Phosphate Esters	All Z-Media® (synthetic) with H (EPR) seal designation and all ASP® media (synthetic)
Skydrol®	3, 5, 10 and 25 µ Z-Media® (synthetic) with H.5 seal designation (EPR seals and stainless steel wire mesh in element, and light oil coating on housing exterior) and all ASP® media (synthetic)

Tank-Mounted Filter (Inside Out Flow)

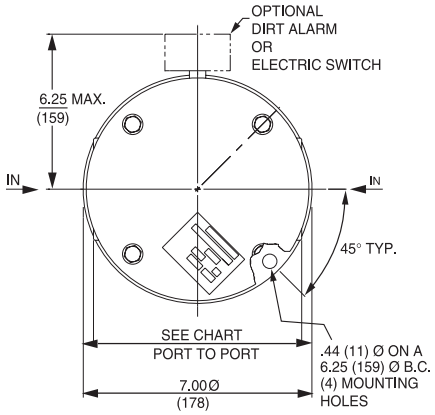

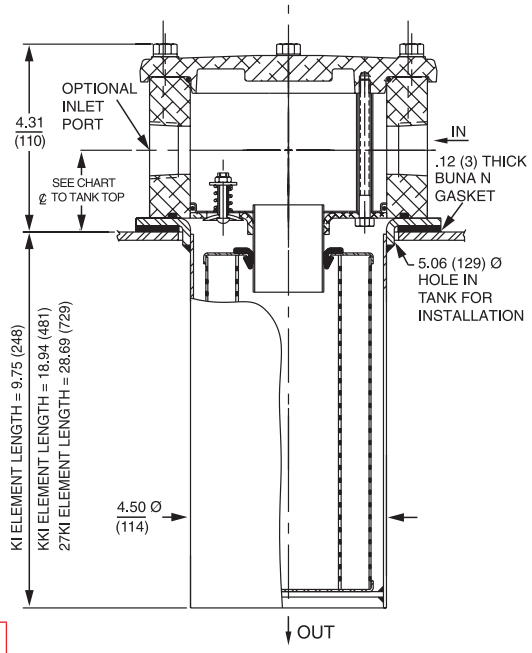

	1¼", 1½" Standard Ports	1½" Ports 4-Bolt Flange Only
Port to Port	6.38"	7.12"
℄ to Casting Base	1.56"	1.75"
℄ to Tank Top	1.88"	2.06"

Optional mounting rings available for tank welding. See page 307, reference part numbers A-LFT-813 and A-LFT-1448.

Metric dimensions in ( ).

Element Performance Information & Dirt Holding Capacity

	Filtration Ratio Per ISO 4572/NFPA T3.10.8.8 Using automated particle counter (APC) calibrated per ISO 4402			Filtration Ratio per ISO 16889 Using APC calibrated per ISO 11171	
Element	$ß_x \geq 75$	$ß_x \geq 100$	$ß_x \geq 200$	$ß_{x(c)} \geq 200$	$ß_{x(c)} \geq 1000$
KIZ1	<1.0	<1.0	<1.0	<4.0	4.2
KIZ3	<1.0	<1.0	<2.0	<4.0	4.8
KIZ10	<7.4	<8.2	<10.0	8.0	10.0

Element	DHC (gm)	Element	DHC (gm)	Element	DHC (gm)
KIZ1	85	KKIZ1	181	27KIZ1	276
KIZ3	88	KKIZ3	185	27KIZ3	283
KIZ10	<82	KKIZ10	174	27KIZ10	266

Element Collapse Rating: 100 psid (7 bar)

Flow Direction: Inside Out

Element Nominal Dimensions: KI: 3.9" (99 mm) O.D. x 9.0" (230 mm) long
KKI: 3.9" (99 mm) O.D. x 18.0" (460 mm) long
27KI: 3.9" (99 mm) O.D. x 27.0" (690 mm) long

Pressure Drop Information

Based on Flow Rate and Viscosity

$\Delta P_{housing}$

RTI $\Delta P_{housing}$ for fluids with sp gr (specific gravity) = 0.86:

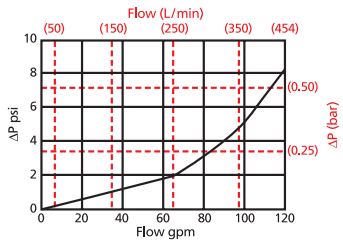

$\Delta P_{element}$

KIZ

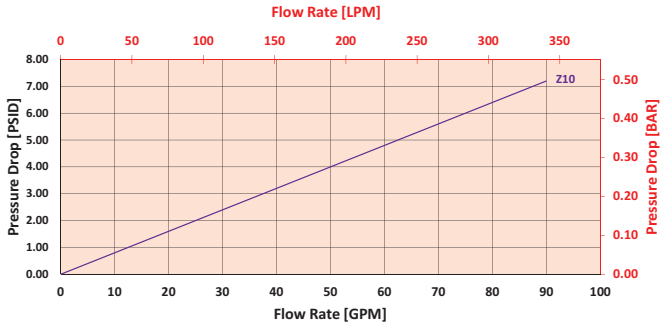

KKIZ

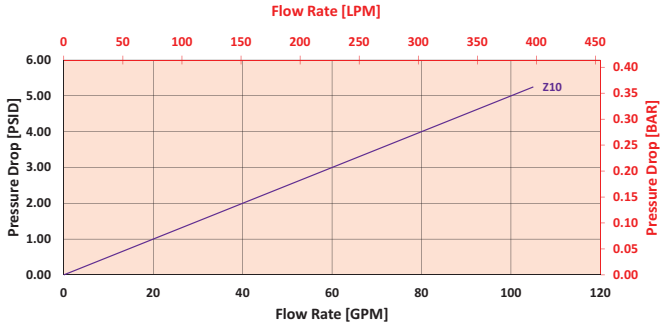

$$\Delta P_{filter} = \Delta P_{housing} + (\Delta P_{element} * V_f)$$

Exercise:

Determine ΔP_{filter} at 80 gpm (303.2 L/min) for RTIKIZ10S20S20NY2 using 160 SUS (34 cSt) fluid.

Use the housing pressure curve to determine $\Delta P_{housing}$ at 80 gpm. In this case, $\Delta P_{housing}$ is 3 psi (.21 bar) on the graph for the RTI housing.

Use the element pressure curve to determine $\Delta P_{element}$ at 80 gpm. In this case, $\Delta P_{element}$ is 6.5 psi (.45 bar) according to the graph for the KIZ10 element.

Because the viscosity in this sample is 160 SUS (34 cSt), we determine the Viscosity Factor (V_f) by dividing the Operating Fluid Viscosity with the Standard Viscosity of 150 SUS (32 cSt). To best determine your Operating Fluid Viscosity, please reference the chart in Appendix D.

Finally, the overall filter pressure differential, ΔP_{filter}, is calculated by adding $\Delta P_{housing}$ with the true element pressure differential, ($\Delta P_{element} * V_f$). The $\Delta P_{element}$ from the graph has to be multiplied by the viscosity factor to get the true pressure differential across the element.

Solution:

$\Delta P_{housing}$ = 3 psi [.21 bar] | $\Delta P_{element}$ = 6.5 psi [.45 bar]

V_f = 160 SUS (34 cSt) / 150 SUS (32 cSt) = 1.1

ΔP_{filter} = 3 psi + (6.5 psi * 1.1) = 10.2 psi

OR

ΔP_{filter} = .21 bar + (.45 bar * 1.1) = .71 bar

Note:
If your element is not graphed, use the following equation:
$\Delta P_{element}$ = Flow Rate x $\Delta P_{f.}$ Plug this variable into the overall pressure drop equation.

Ele.	ΔP
KIAS10	0.08
KKIAS10	0.05
27KIAS10/ 27KIAS10	0.04

RTI Tank-Mounted Filter (Inside Out Flow)

Filter Model Number Selection

How to Build a Valid Model Number for a Schroeder RTI:

BOX 1		BOX 2		BOX 3		BOX 4		BOX 5		BOX 6
RTI	–		–		–		–		–	

Example: NOTE: Only box 6 may contain more than one option

BOX 1		BOX 2		BOX 3		BOX 4		BOX 5		BOX 6	
RTI	–	KIZ10	–		–	S20 S20 N	–	Y2	–		= RTIKIZ10S20S20NY2

BOX 1

Filter Series
RTI

BOX 2

Element Part Number			
K Length	KK Length	27K Length	
KIZ1	KKIZ1	27KIZ1	= 1 µ Excellement® Z-Media® and ASP® media (synthetic)
KIZ3	KKIZ3	27KIZ3	= 3 µ Excellement® Z-Media® and ASP® media (synthetic)
KIZ10	KKIZ10	27KIZ10	= 10 µ Excellement® Z-Media® and ASP® media (synthetic)

BOX 3

Seal Material
Omit = Buna N
H = EPR
W = Anodized Aluminum Parts
H.5 = Skydrol® Compatibility

Inlet Porting Location
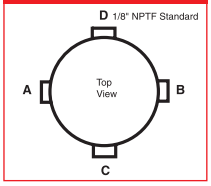

BOX 4 Specification of all 3 ports is required

Inlet Porting		
Port A	Port B	Port C
P16 = 1" NPTF	N = None	N = None
P20 = 1¼" NPTF	P16 = 1" NPTF	P2 = ⅛" NPTF
P24 = 1½" NPTF	P20 = 1¼" NPTF	P16 = 1" NPTF
S16 = SAE-16	P24 = 1½" NPTF	S16 = SAE-16
S20 = SAE-20	S16 = SAE-16	
S24 = SAE-24	S20 = SAE-20	
F20 = 1¼" SAE 4-bolt flange Code 61	S24 = SAE-24	
F24 = 1½" SAE 4-bolt flange Code 61	F20 = 1¼" SAE 4-bolt flange Code 61	
	F24 = 1½" SAE 4-bolt flange Code 61	

BOX 5

Dirt Alarm® Options		
		Omit = None
Located @ Port D	Visual	Y2 = Back-mounted tri-color gauge
	Electrical	ES = Electric switch ES1 = Heavy-duty electric switch with conduit connector ES2 = Electrical Switch with Deutsch Connector
Located in cap	Visual	Y2C = Bottom-mounted tri-color gauge Y5 = Back-mounted gauge in cap
Located @ Port C	Visual	Y2R = Back-mounted gauge mounted on opposite side of standard location
	Electrical	ESR = Electric switch mounted on opposite side of standard location ES1R = Heavy-duty electric switch with conduit connector

BOX 6

Additional Options
Omit = None
G547 = Two ⅛" gauge ports
M = Metric thread for SAE 4-bolt flange mounting holes (specify after each port designation)

NOTES:

Box 2. Replacement element part numbers are identical to contents of Boxes 2 and 3.

Box 3. For options H, W, and H.5, all aluminum parts are anodized. H.5 seal designation includes the following: EPR seals, stainless steel wire mesh on elements, and light oil coating on housing exterior. Skydrol® is a registered trademark of Solutia Inc.

Box 4. If using Port B, Port A & B must always be the same type and size. Example: (A) P20 (B) P20 (C) P16

Box 6. See also "Accessories for Tank-Mounted Filters," page 307.

Tank-Mounted Filter LRT

Model No. of filter in photograph is LRT18LZ10S24NP16Y2.

Features and Benefits

- Low pressure tank-mounted filter
- Multiple inlet/outlet porting options
- Top, side or bottom mounting
- Optional check valve prevents reservoir siphoning
- Can also be used in return line application (contact factory)
- Visual gauge or electrical switch dirt alarms
- Offered in pipe, SAE straight thread, flanged and ISO 228 porting
- Same day shipment model available
- Also available with DirtCatcher® elements (18LD)
- G Available with quality-protected GeoSeal® Elements (GLRT)

150 gpm
570 L/min
100 psi
7 bar

Filter Housing Specifications

Flow Rating:	Up to 150 gpm (570 L/min) for 150 SUS (32 cSt) fluids
Max. Operating Pressure:	100 psi (7 bar)
Min. Yield Pressure:	400 psi (28 bar), per NFPA T2.6.1
Rated Fatigue Pressure:	90 psi (6 bar), per NFPA T2.6.1-2005
Temp. Range:	-20°F to 225°F (-29°C to 107°C)
Bypass Setting:	Cracking: 25 psi (1.7 bar) Full Flow: 34 psi (2.3 bar)
Porting Head & Cap: Element Case:	Die Cast Aluminum Steel
Weight of LRT-18L:	14.6 lbs. (6.6 kg)
Element Change Clearance:	17.0" (432 mm)

Fluid Compatibility

Type Fluid	Appropriate Schroeder Media
Petroleum Based Fluids	All E media (cellulose) and Z-Media® (synthetic)
High Water Content	All Z-Media® (synthetic)
Invert Emulsions	10 and 25 µ Z-Media® (synthetic)
Water Glycols	3, 5, 10 and 25 µ Z-Media® (synthetic)
Phosphate Esters	All Z-Media® (synthetic) with H (EPR) seal designation
Skydrol®	3, 5, 10 and 25 µ Z-Media® (synthetic) with H.5 seal designation (EPR seals and stainless steel wire mesh in element, and light oil coating on housing exterior)

Tank-Mounted Filter

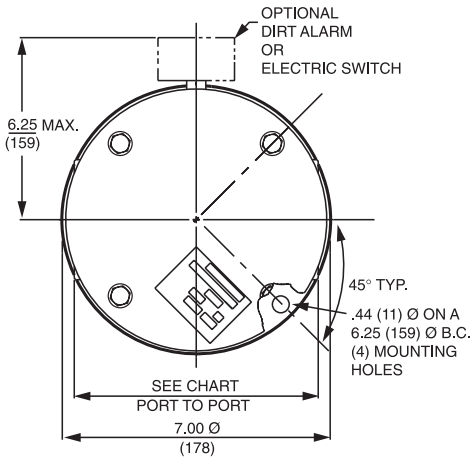

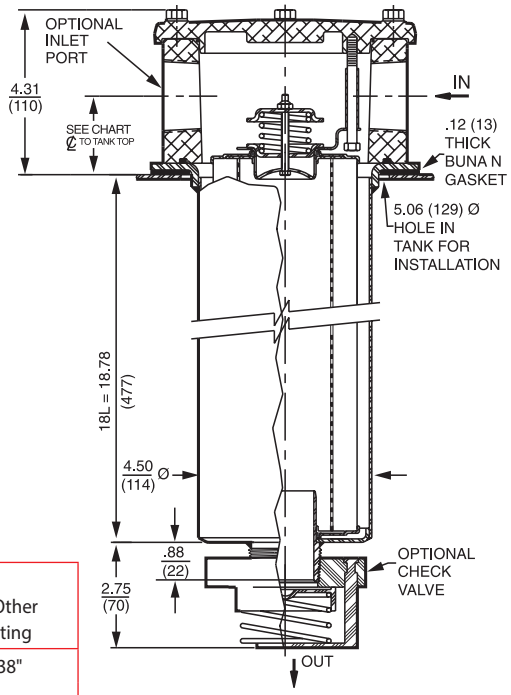

	1½" Ports 4-Bolt Flange Only	2" Ports	All Other Porting
Port to Port	7.12"	7.56" (P, S, B) 7.38" (F)	6.38"
℄ to Casting Base	1.75"	1.81"	1.56"
℄ to Tank Top	2.06"	2.12"	1.88"

Optional mounting ring available to weld to tank.

Metric dimensions in ( ).

Element Performance Information & Dirt Holding Capacity

Element	Filtration Ratio Per ISO 4572/NFPA T3.10.8.8 Using automated particle counter (APC) calibrated per ISO 4402			Filtration Ratio per ISO 16889 Using APC calibrated per ISO 11171	
	$ß_x \geq 75$	$ß_x \geq 100$	$ß_x \geq 200$	$ß_x(c) \geq 200$	$ß_x(c) \geq 1000$
18LZ1	<1.0	<1.0	<1.0	<4.0	4.2
18LZ3	<1.0	<1.0	<2.0	<4.0	4.8
18LZ5	2.5	3.0	4.0	4.8	6.3
18LZ10	7.4	8.2	10.0	8.0	10.0
18LZ25	18.0	20.0	22.5	19.0	24.0

Element	DHC (gm)	Element	DHC (gm)
18LZ1	224	18LDZ1	194
18LZ3	230	18LDZ3	199
18LZ5	238	18LDZ5	194
18LZ10	216	18LDZ10	186
18LZ25	186	18LDZ25	169

Element Collapse Rating: 150 psid (10 bar)
Flow Direction: Outside In
Element Nominal Dimensions: 4.0" (100 mm) O.D. x 18.5" (470 mm) long

Pressure Drop Information

Based on Flow Rate and Viscosity

$\Delta P_{housing}$

LRT $\Delta P_{housing}$ for fluids with sp gr (specific gravity) = 0.86:

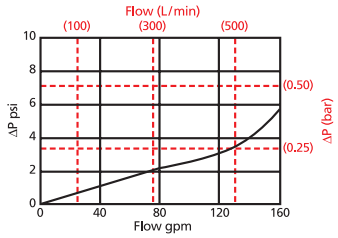

$\Delta P_{element}$

18LZ

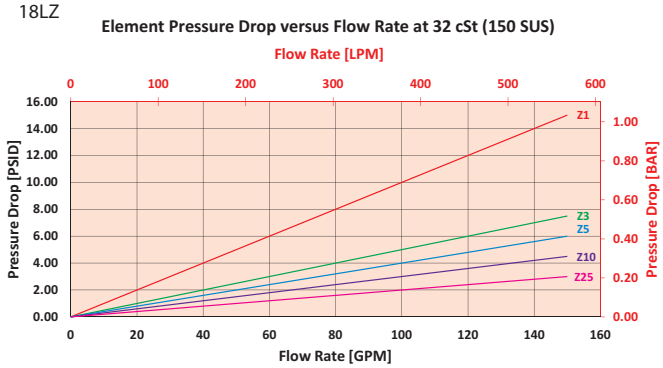

$$\Delta P_{filter} = \Delta P_{housing} + (\Delta P_{element} * V_f)$$

Exercise:

Determine ΔP_{filter} at 120 gpm (379 L/min) for LRT18LZ10S24S24NY2 using 160 SUS (34 cSt) fluid.

Use the housing pressure curve to determine $\Delta P_{housing}$ at 120 gpm. In this case, $\Delta P_{housing}$ is 3 psi (.21 bar) on the graph for the LRT housing.

Use the element pressure curve to determine $\Delta P_{element}$ at 120 gpm. In this case, $\Delta P_{element}$ is 4 psi (.27 bar) according to the graph for the 18LZ10 element.

Because the viscosity in this sample is 160 SUS (34 cSt), we determine the Viscosity Factor (V_f) by dividing the Operating Fluid Viscosity with the Standard Viscosity of 150 SUS (32 cSt). To best determine your Operating Fluid Viscosity, please reference the chart in Appendix D.

Finally, the overall filter pressure differential, ΔP_{filter}, is calculated by adding $\Delta P_{housing}$ with the true element pressure differential, ($\Delta P_{element} * V_f$). The $\Delta P_{element}$ from the graph has to be multiplied by the viscosity factor to get the true pressure differential across the element.

Solution:

$\Delta P_{housing}$ = 8 psi [.55 bar] | $\Delta P_{element}$ = 4 psi [.27 bar]

V_f = 160 SUS (34 cSt) / 150 SUS (32 cSt) = 1.1

ΔP_{filter} = 3 psi + (4 psi * 1.1) = 7.4 psi

OR

ΔP_{filter} = .21 bar + (.27 bar * 1.1) = .51 bar

Note:
If your element is not graphed, use the following equation:
$\Delta P_{element}$ = Flow Rate x $\Delta P_{f.}$ Plug this variable into the overall pressure drop equation.

Ele.	ΔP
18LDZ1	0.12
18LDZ3	0.06
18LDZ5	0.05
18LDZ10	0.03
18LDZ25	0.02

LRT Tank-Mounted Filter

Filter Model Number Selection

Highlighted product eligible for QuickDelivery

How to Build a Valid Model Number for a Schroeder LRT:

BOX 1	BOX 2	BOX 3	BOX 4	BOX 5	BOX 6A	BOX 6B	BOX 7	BOX 8
LRT								

Example: NOTE: Only box 8 may contain more than one option

BOX 1	BOX 2	BOX 3	BOX 4	BOX 5	BOX 6A	BOX 6B	BOX 7	BOX 8	
LRT	18	LZ10		S24 S24 N			Y2		= LRT18LZ10S24S24NY2

BOX 1 — Filter Series

LRT
GLRT (GeoSeal)

BOX 2 — Element Length (in)

18

BOX 3 — Element Size and Media

L3	= L size 3 µ E media (cellulose)
L10	= L size 10 µ E media (cellulose)
LZ1	= L size 1 µ Excellement® Z-Media® (synthetic)
LZ3	= L size 3 µ Excellement® Z-Media® (synthetic)
LZ5	= L size 5 µ Excellement® Z-Media® (synthetic)
LZ10	= L size 10 µ Excellement® Z-Media® (synthetic)
LZ25	= L size 25 µ Excellement® Z-Media® (synthetic)
LDZ1	= L size DirtCatcher® 1 µ Excellement® Z-Media®
LDZ3	= L size DirtCatcher® 3 µ Excellement® Z-Media®
LDZ5	= L size DirtCatcher® 5 µ Excellement® Z-Media®
LDZ10	= L size DirtCatcher® 10 µ Excellement® Z-Media®
LDZ25	= L size DirtCatcher® 25 µ Excellement® Z-Media®
GeoSeal® Element Options	
LGZ1	= L size 1 µ Excellement® Z-Media® (synthetic)
LGZ3	= L size 3 µ Excellement® Z-Media® (synthetic)
LGZ5	= L size 5 µ Excellement® Z-Media® (synthetic)
LGZ10	= L size 10 µ Excellement® Z-Media® (synthetic)
LGZ25	= L size 25 µ Excellement® Z-Media® (synthetic)

BOX 4 — Seal Material

Omit	= Buna N
H	= EPR
W	= Anodized Aluminum Parts
H.5	= Skydrol® compatibility

BOX 5 — Inlet Porting

Specification of all 3 ports is required

Port A	Port B	Port C
P16 = 1" NPTF	N = None	N = None
P20 = 1¼" NPTF	P16 = 1" NPTF	P2 = ⅛" NPTF
P24 = 1½" NPTF	P20 = 1¼" NPTF	P16 = 1" NPTF
P32 = 2" NPTF	P24 = 1½" NPTF	S16 = SAE-16
S16 = SAE-16	P32 = 2" NPTF	
S20 = SAE-20	S16 = SAE-16	
S24 = SAE-24	S20 = SAE-20	
S32 = SAE-32	S24 = SAE-24	
F20 = 1¼" SAE 4-bolt flange Code 61	S32 = SAE-32	
F24 = 1½" SAE 4-bolt flange Code 61	F20 = 1¼" SAE 4-bolt flange Code 61	
F32 = 2" SAE 4-bolt flange Code 61	F24 = 1½" SAE 4-bolt flange Code 61	
B24 = ISO 228 G-1½"	F32 = 2" SAE 4-bolt flange Code 61	
Flange port option only:	B24 = ISO 228 G-1½"	
M = Metric SAE 4 bolt flange		

Inlet Porting Location

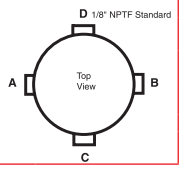

BOX 6A — Bypass Option

Omit	= 25 psi bypass setting
40	= 40 psi bypass setting

BOX 6B — Outlet Porting Options

Omit	= 2" NPT male
C	= Check valve
D	= Diffuser
T	= 13" Tube ext.
A	= Non-thread outlet

BOX 7 — Dirt Alarm® Options

		Omit = None
Located @ Port D	Visual	Y2 = Back-mounted tri-color gauge
		ES = Electric switch
		ES1 = Heavy-duty electric switch with conduit connector
		ES2 = Electrical Switch with Deutsch Connector
		ES3 = Electric Switch with DIN 43650
Located in cap	Visual	Y2C = Bottom-mounted tri-color gauge
		Y5 = Back-mounted gauge in cap
Located @ Port C	Visual	Y2R = Back-mounted gauge mounted on opposite side of standard location
		ESR = Electric switch mounted on opposite side of standard location
		ES1R = Heavy-duty electric switch with conduit connector

BOX 8 — Add. Options

Omit	= None
G2293	= Cork gasket
G547	= Two ⅛" gauge ports
G820	= Stamped cap

NOTES:

Box 2. Replacement element part numbers are a combination of Boxes 2, 3, and 4. Example: 18LZ10

Box 4. For options H, W, and H.5, all aluminum parts are anodized. H.5 seal designation includes the following: EPR seals, stainless steel wire mesh on elements, and light oil coating on housing exterior. Skydrol® is a registered trademark of Solutia Inc.

Box 5. If using Port B, Port A & B must always be the same type and size. Example: (A) P20 (B) P20 (C) P16.

Box 6. See also "Accessories for Tank-Mounted Filters," page 307.

Tank-Mounted Filter ART

Model No. of filter in photograph is ART85Z10F43.

Features and Benefits

- Compact, lightweight, low pressure tank mounted filter ideal for mobile applications
- Lightweight plastic bowl
- ART aluminum alloy is designed to be water tolerant - anodization is not required for use with water based fluids (HWCF).
- Special filter element design provides aftermarket benefits.
- Various Dirt Alarm® options

225 gpm
850 L/min
145 psi
10 bar

Filter Housing Specifications

Flow Rating:	Up to 225 gpm (850 L/min) for 150 SUS (32 cSt) fluids
Max. Operating Pressure:	145 psi (10 bar)
Min. Yield Pressure:	535 psi (37 bar), per NFPA T2.6.1
Rated Fatigue Pressure:	145 psi (10 bar), per NFPA T2.6.1
Temp. Range:	-20°F to 225°F (-29°C to 107°C)
Bypass Setting:	Cracking: 43 psi (3 bar) Full Flow: 69 psi (4.75 bar)
Porting Head & Cap: Element Case:	Aluminum Plastic
Weight of ART:	15 lbs. (7 kg)
Element Change Clearance:	16.39" (340 mm)

Fluid Compatibility

Type Fluid	Appropriate Schroeder Media
Petroleum Based Fluids	All Z-Media® (synthetic)
High Water Content	All Z-Media® (synthetic)

Tank-Mounted Filter

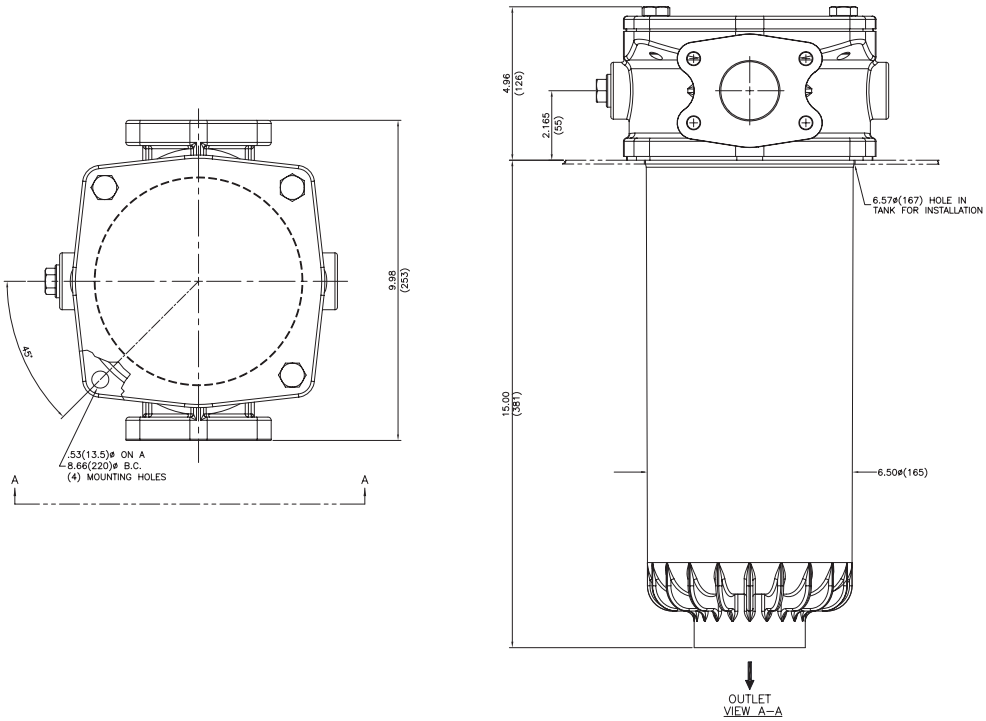

Metric dimensions in ( ).

Element Performance Information & Dirt Holding Capacity

Element	Filtration Ratio per ISO 16889 Using APC calibrated per ISO 11171 $ß_x(c) \geq 200$	$ß_x(c) \geq 1000$
85Z1	<4.0	4.2
85Z3	<4.0	4.8
85Z5	4.8	6.3
85Z10	8.0	10.0
85Z25	19.0	24.0

Element	DHC (gm)
85Z1	185
85Z3	147
85Z5	206
85Z10	164
85Z25	167

Element Collapse Rating: 150 psid (10 bar)

Flow Direction: Outside In

Element Nominal Dimensions: 4.5" (114.3 mm) O.D. x 13.8" (350.52 mm) long

Pressure Drop Information

Based on Flow Rate and Viscosity

$\Delta P_{housing}$

ART $\Delta P_{housing}$ for fluids with sp gr (specific gravity) = 0.86:

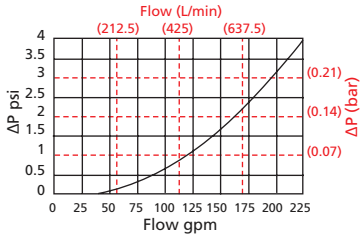

$\Delta P_{element}$

85Z

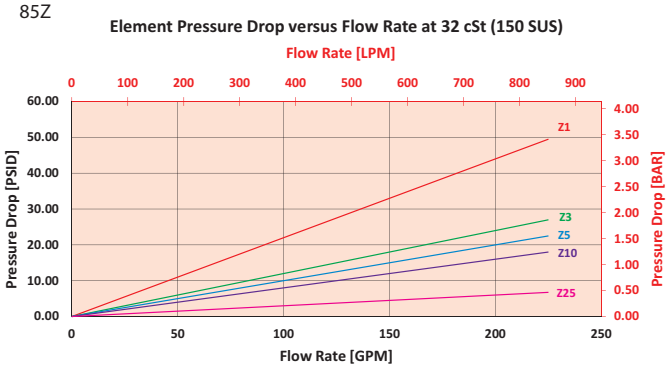

$$\Delta P_{filter} = \Delta P_{housing} + (\Delta P_{element} * V_f)$$

Exercise:

Determine ΔP_{filter} at 120 gpm (379 L/min) for ART85Z10F43Y2 using 160 SUS (34 cSt) fluid.

Use the housing pressure curve to determine $\Delta P_{housing}$ at 120 gpm. In this case, $\Delta P_{housing}$ is 1 psi (.07 bar) on the graph for the ART housing.

Use the element pressure curve to determine $\Delta P_{element}$ at 120 gpm. In this case, $\Delta P_{element}$ is 10 psi (.69 bar) according to the graph for the 85Z10 element.

Because the viscosity in this sample is 160 SUS (34 cSt), we determine the Viscosity Factor (V_f) by dividing the Operating Fluid Viscosity with the Standard Viscosity of 150 SUS (32 cSt). To best determine your Operating Fluid Viscosity, please reference the chart in Appendix D.

Finally, the overall filter pressure differential, ΔP_{filter}, is calculated by adding $\Delta P_{housing}$ with the true element pressure differential, ($\Delta P_{element}$*V_f). The $\Delta P_{element}$ from the graph has to be multiplied by the viscosity factor to get the true pressure differential across the element.

Solution:

$\Delta P_{housing}$ = 1 psi [.07 bar] | $\Delta P_{element}$ = 10 psi [.69 bar]

V_f = 160 SUS (34 cSt) / 150 SUS (32 cSt) = 1.1

ΔP_{filter} = 1 psi + (10 psi * 1.1) = 12 psi

OR

ΔP_{filter} = .07 bar + (.69 bar * 1.1) = .83 bar

ART Tank-Mounted Filter

Filter Model Number Selection

How to Build a Valid Model Number for a Schroeder ART:

BOX 1		BOX 2		BOX 3		BOX 4		BOX 5		BOX 6		BOX 7
ART	–		–		–		–		–		–	

Example: NOTE: One option per box

BOX 1		BOX 2		BOX 3		BOX 4		BOX 5		BOX 6		BOX 7	
ART	–	85Z10	–		–	F	–	43	–		–	Y2	= ART85Z10F43Y2

BOX 1

Filter Series
ART

BOX 2

Element Size and Media	
85Z1	= 1 µ Excellement® Z-Media® (synthetic)
85Z3	= 3 µ Excellement® Z-Media® (synthetic)
85Z5	= 5 µ Excellement® Z-Media® (synthetic)
85Z10	= 10 µ Excellement® Z-Media® (synthetic)
85Z25	= 25 µ Excellement® Z-Media® (synthetic)

BOX 3

Seal Material
Omit = Buna N
H = EPR

BOX 4

Porting
F = 2½" SAE-40 4-bolt flange Code 61
FF = Dual 2½" SAE-40 4-bolt flange Code 61
S = SAE-32
SS = Dual SAE-32

BOX 5

Bypass Setting
43 = 43 psi Bypass

BOX 6

Outlet Options
Omit = 2" Threadless Outlet

BOX 7

Dirt Alarm® Options		
	Omit =	None
Visual	Y2 =	Back-mounted tri-color gauge
	Y2R =	Back-mounted gauge mounted on opposite side of standard location
Electrical	ES =	Electric switch (normally open)
	ESR =	Electric switch mounted on opposite side of standard location
	ES1 =	Heavy-duty electric switch with conduit connector
	ES1R =	Heavy-duty electric switch with conduit connector mounted on opposite side of standard location
	ES2 =	Super duty electric switch with Thermal Lockout and 2 pin Deutsche connector (DT04-2P, SPST, normally closed)

NOTES:

Box 2. Replacement element part numbers are identical to contents of Boxes 2 and 3.

Box 3. For option H, all aluminum parts are anodized.

Return Line Filter BRT

Model No. of filter in photograph is BRT6RBZ102.

Features and Benefits

- Filter is mounted in the tank and flow comes to it from a pipe connection below it or from the side
- Optimal flow conditions created by flow from beneath guaranteeing optimal air separation, even tank mixing, and long element service intervals
- Patented de-aeration windows around the housing offer superior air bubble coalescence in a 360 degree discharge
- Quality Protected Inside-Out Flow Element Design

Part of the Schroeder Industries Energy Sustainability Initiative

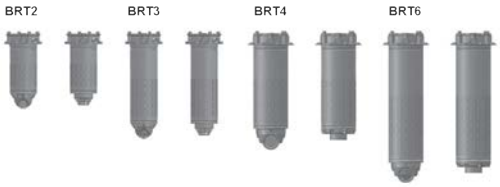

to 160 gpm
to 600 L/min
to 145 psi
to 10 bar

Filter Housing Specifications

Flow Rating:	Up to 160 gpm (600 L/min) for 150 SUS (32 cSt) fluids
Max. Operating Pressure:	145 psi (10 bar)
Temp. Range:	-22°F to 248°F (-30°C to 120°C)
Bypass Setting:	Cracking: 36 psi (2.5 bar)
Filter Head & Cover: Inlet Section:	BRT 2 - 6: Aluminum Nylon (PA66)
Seals	Buna N
Installation:	As in-tank filter

Fluid Compatibility

Type Fluid	Appropriate Schroeder Media
Hydraulic Oils	Schroeder Z-Media® (synthetic)
Lubrication Oils	Schroeder Z-Media® (synthetic)
Compressor Oils	Schroeder Z-Media® (synthetic)
Biodegradable Operating Fluids	Schroeder Z-Media® (synthetic)

Return Line Filter

Dimensions BRT2 - BRT3

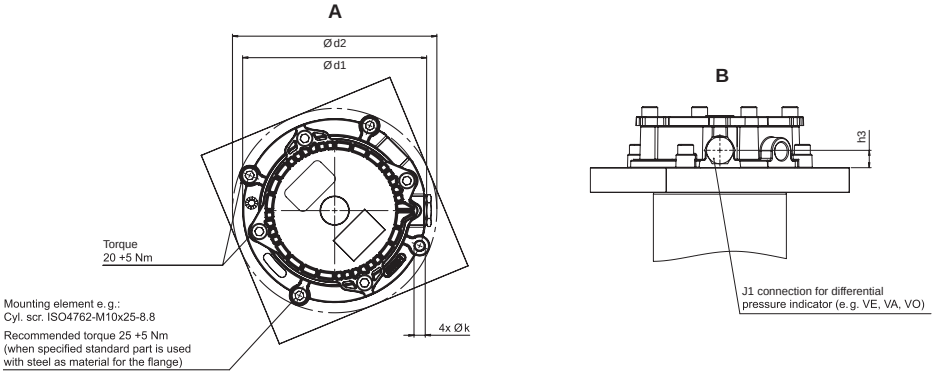

Housing closure V

Housing connection H

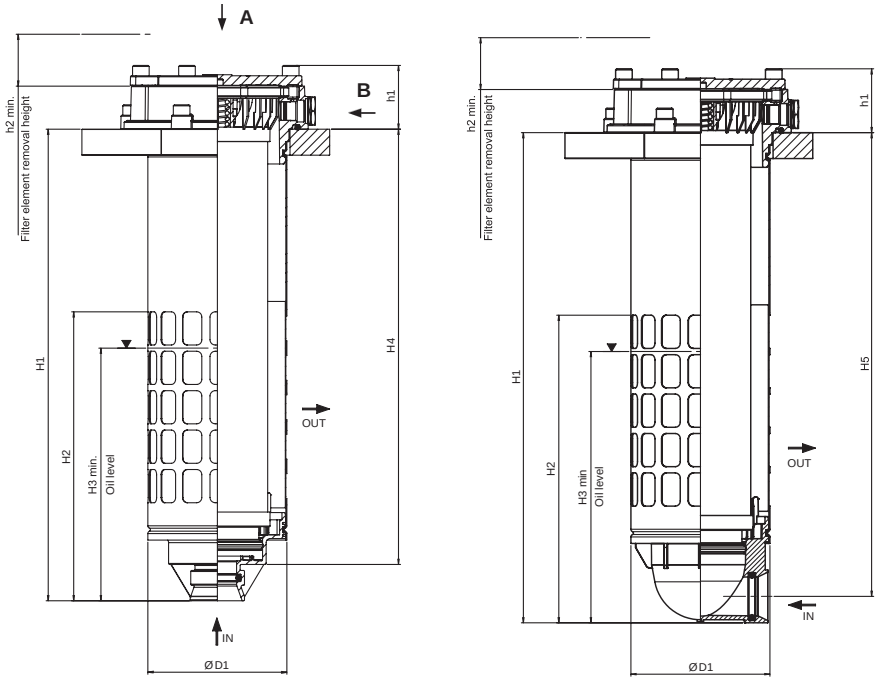

Type	Design	Connection pos.	H1	H2	H3	H4	H5	h1	h2	h3	ØD1	Ød1	Ød2	Øk	Weight [kg]
RFB 0170	Diffuser with opening	H	322.5	220.5	186	–	297	61.5	300	17.5	134	180	200	10.5	3.3
	Diffuser with opening	V	304.5	202.5	168	269.5	–								3.2
RFB 0300	Diffuser with opening	H	472.5	296.5	262	–	447		450						3.9
	Diffuser with opening	V	454.5	278.5	244	419.5	–								4.0

Element Performance Information

Element	Filtration Ratio Per ISO 4572/NFPA T3.10.8.8 Using automated particle counter (APC) calibrated per ISO 4402			Filtration Ratio per ISO 16889 Using APC calibrated per ISO 11171	
	$ß_x \geq 75$	$ß_x \geq 100$	$ß_x \geq 200$	$ß_x(c) \geq 200$	$ß_x(c) \geq 1000$
2RBZ10	C/F	C/F	C/F	C/F	11.2
2RBZ25	C/F	C/F	C/F	C/F	16.2
3RBZ10	C/F	C/F	C/F	C/F	11.2
3RBZ25	C/F	C/F	C/F	C/F	16.2
4RBZ10	C/F	C/F	C/F	C/F	11.2
4RBZ25	C/F	C/F	C/F	C/F	16.2
6RBZ10	C/F	C/F	C/F	C/F	11.2
6RBZ25	C/F	C/F	C/F	C/F	16.2

Metric dimensions mm ( ).

Dimensions BRT4 - BRT6

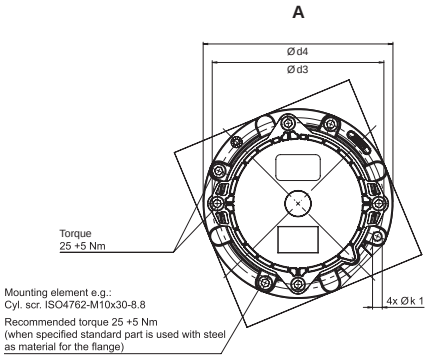

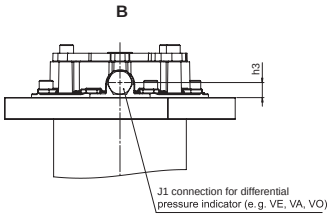

Housing closure V

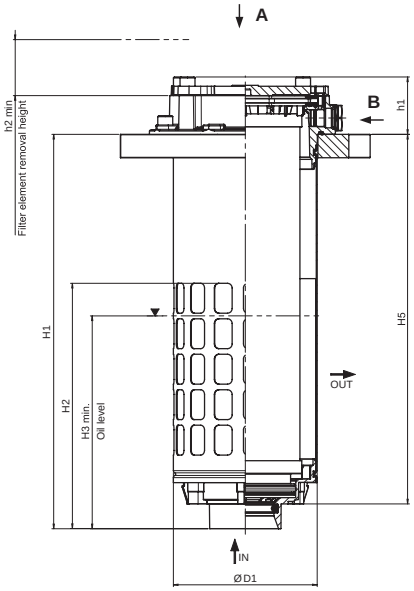

Housing connection H

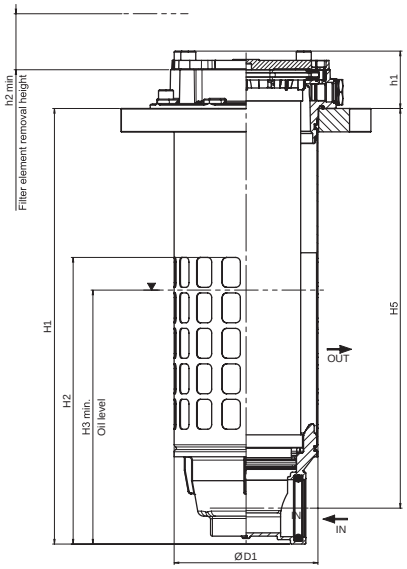

Type	Design	Connection pos.	H1	H2	H3	H4	H5	h1	h2	h3	ØD1	Ød1	Ød2	Øk1	Weight [kg]
RFB 0400	Diffuser with opening	H	466.5	307	234	–	428	61.5	430	17.5	154	185.7	205	10.5	4.5
	Diffuser with opening	V	422.4	262.6	182	393.8	–								4.3
RFB 0600	Diffuser with opening	H	613.7	383.2	310	–	575.2		580						5.5
	Diffuser with opening	V	561.6	331.1	258	541	–								5.3

Element Dirt Holding Capacity & Burst Rating

Element	DHC (g)	Element	DHC (g)
2RBZ10	70.4	4RBZ10	152.5
2RBZ25	77.8	4RBZ25	173.4
3RBZ10	114.3	6RBZ10	190.4
3RBZ25	128.3	6RBZ25	231.7

Element Burst Rating: 87 psi (6 bar) for standard elements
Flow Direction: Inside Out

Metric dimensions mm ( ).

Return Line Filter

Dimensions BRT2 - BRT3

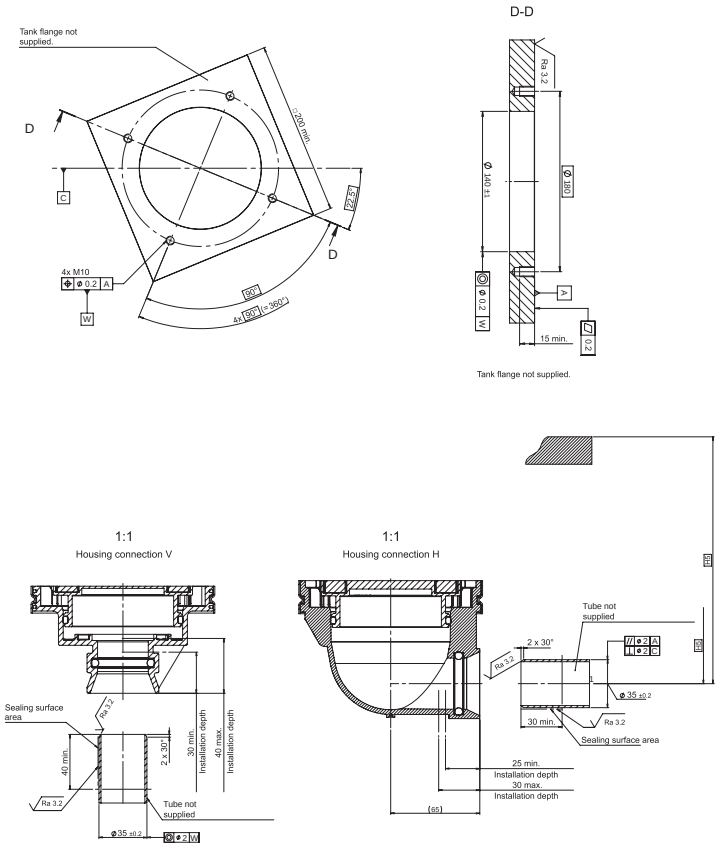

Dimensions BRT4 - BRT6

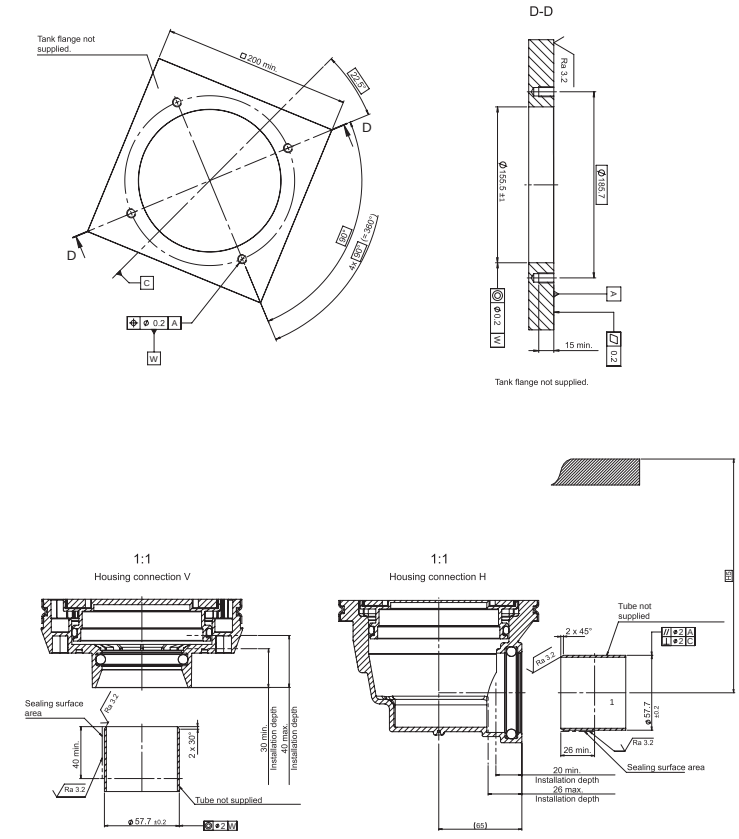

Metric dimensions mm ( ).

Pressure Drop Information

Based on Flow Rate and Viscosity

$\Delta P_{element}$

BRT2

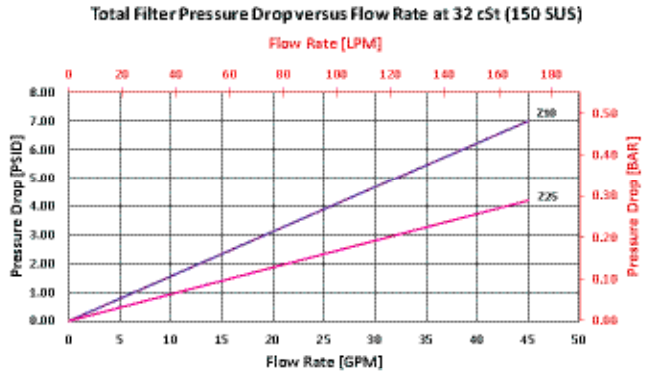

BRT3

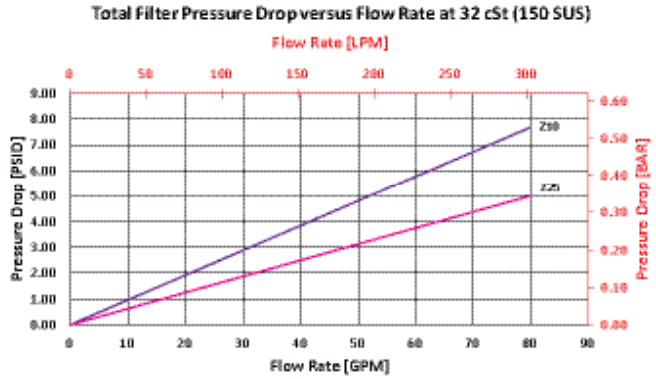

BRT4

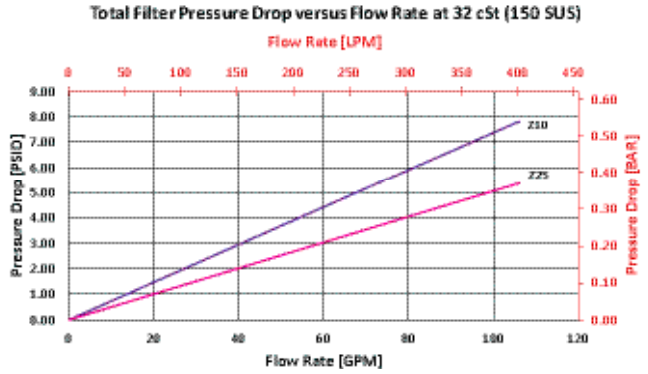

BRT6

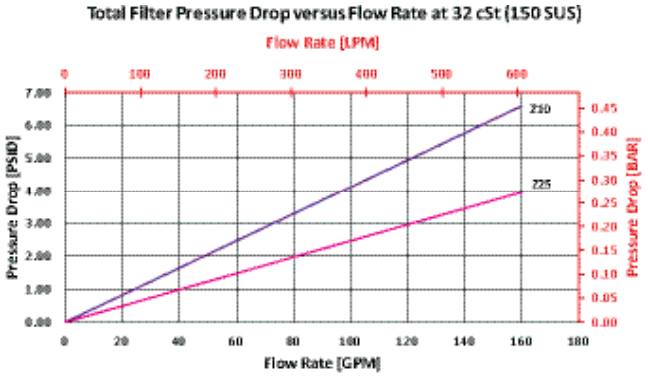

Return Line Filter

Filter Model Number Selection

How to Build a Valid Model Number for a Schroeder BRT:

BOX 1		BOX 2		BOX 3		BOX 4		BOX 5		BOX 6		BOX 7
BRT	–		–		–		–		–		–	

Example: NOTE: One option per box

BOX 1		BOX 2		BOX 3		BOX 4		BOX 5		BOX 6		BOX 7	
BRT	–	3RB	–	Z	–	10	–		–	1	–		= BRT3RBZ101Y2

BOX 1

Filter Series
BRT

BOX 2

Size of Element
2RB
3RB
4RB
6RB

BOX 3

Element Media Type
Z = Excellement® Z-Media® (synthetic)

BOX 4

Micron Rating
10 = 10 µm
25 = 25 µm

BOX 5

Seal Material
Omit = Buna N
V = Viton®

BOX 6

Inlet Porting
2 = side inlet
1 = bottom inlet

BOX 7

Dirt Alarm® Options	
	Omit = No Indicator, sealed up w/ screw plug
Clogging Indicators	VA = visual/electrical
	VE = electrical
	VO = visual

Return Line Filter TRT

Model No. of filter in photograph is TRT3RTZ10MS.

Features and Benefits

- Filter head is mounted on the tank like a standard return-line filter solution
- The protective tube can be supplied in various optional versions: 1.) as a closed tube with the outlet opening facing downwards or with a closed base and rows of operating holes at the height of the tank's oil level 2.) with an optional magnetic core connected to the filter element guaranteeing effective magnetic pre-filtration
- Patented de-aeration windows around the housing offer superior air bubble coalescence in a 360 degree discharge
- Quality Protected Element Design

Part of the Schroeder Industries Energy Sustainability Initiative

up to 100 gpm
up to 380 L/min
to 145 psi
to 10 bar

Filter Housing Specifications

Flow Rating:	Up to 100 gpm (400 L/min) for 150 SUS (32 cSt) fluids
Max. Operating Pressure:	145 psi (10 bar)
Temp. Range:	-22°F to 248°F (-30°C to 120°C)
Bypass Setting:	Cracking: 36 psi (2.5 bar)
Filter Head & Cover:	Aluminum
Filter Housing:	Steel
Inlet Section:	Nylon (PA66)
Seals:	Buna N and Viton
Installation:	As in-tank filter

Fluid Compatibility

Type Fluid	Appropriate Schroeder Media
Hydraulic Oils	Schroeder Z-Media® (synthetic)
Lubrication Oils	Schroeder Z-Media® (synthetic)
Compressor Oils	Schroeder Z-Media® (synthetic)
Biodegradable Operating Fluids	Schroeder Z-Media® (synthetic)

Return Line Filter

Dimensions TRT1, 2, 3, 4

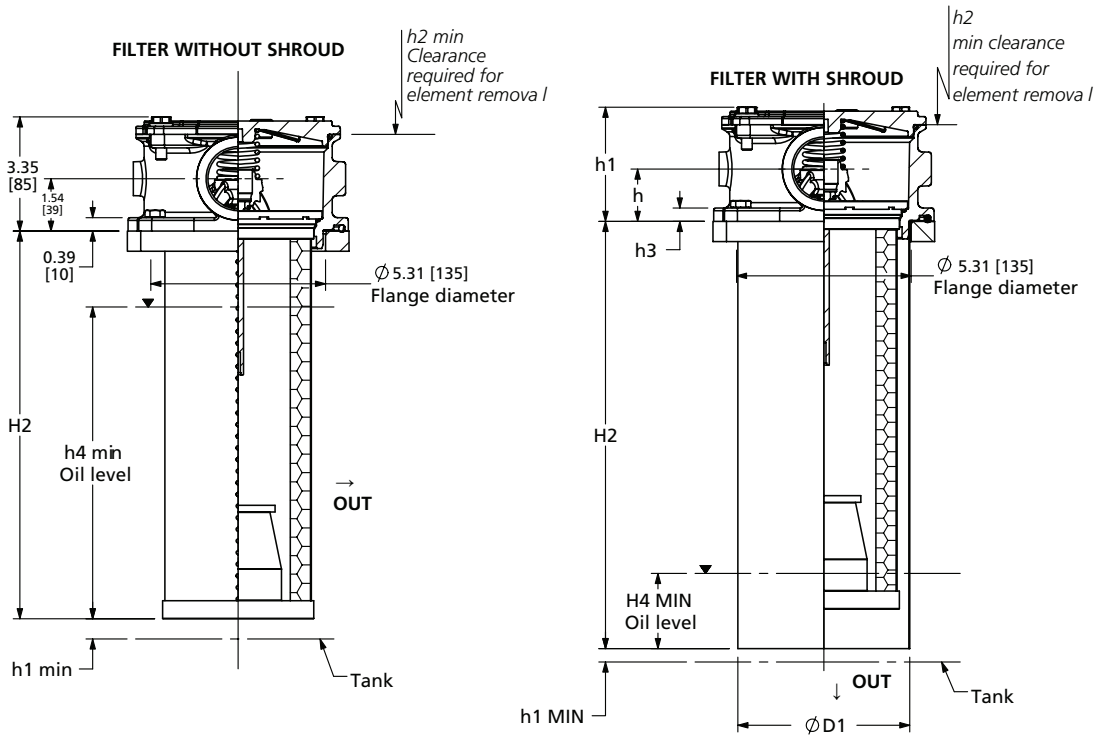

Element Performance Information

Element	Filtration Ratio Per ISO 4572/NFPA T3.10.8.8 Using automated particle counter (APC) calibrated per ISO 4402			Filtration Ratio per ISO 16889 Using APC calibrated per ISO 11171	
	$ß_x \geq 75$	$ß_x \geq 100$	$ß_x \geq 200$	$ß_x(c) \geq 200$	$ß_x(c) \geq 1000$
1RTZ10	C/F	C/F	C/F	C/F	12.3
1RTZ25	C/F	C/F	C/F	C/F	16.2
2RTZ10	C/F	C/F	C/F	C/F	12.3
2RTZ25	C/F	C/F	C/F	C/F	18.6
3RTZ10	C/F	C/F	C/F	C/F	12.3
3RTZ25	C/F	C/F	C/F	C/F	18.6
4RTZ10	C/F	C/F	C/F	C/F	12.3
4RTZ25	C/F	C/F	C/F	C/F	18.6

Element Dirt Holding Capacity & Burst Rating

Element	DHC (g)	Element	DHC (g)
1RTZ10	81.0	3RTZ10	199.1
1RTZ25	89.9	3RTZ25	221.0
2RTZ10	150.5	4RTZ10	242.8
2RTZ25	167.1	4RTZ25	269.5

Element Burst Rating: 87 psi (6 bar) for standard elements
Flow Direction: Inside Out

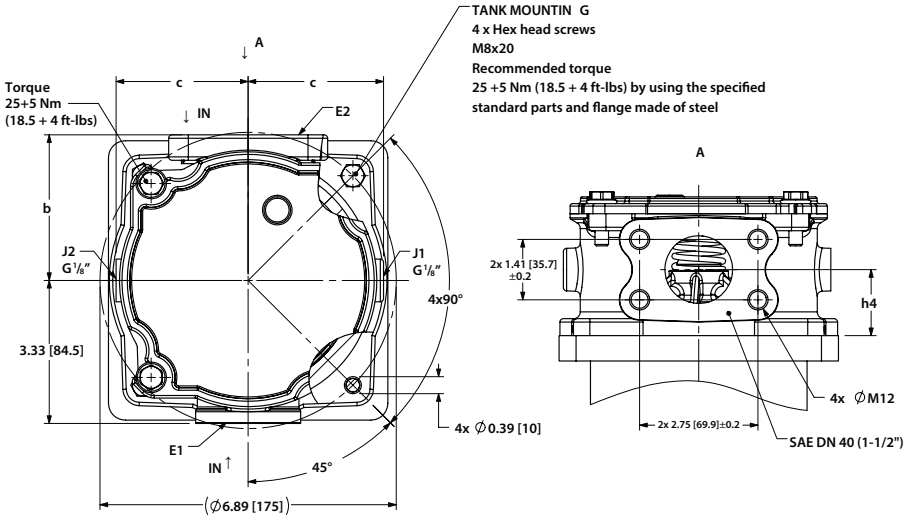

		H1	H2	H3	H4	h2	h4	ØD1	b	c	Weight (lbs [kg])
TRT1	No housing tube	0.39 [10]	8.58 [218]	-	6.10 [155]	10.24 [260]	-	-	3.39 [86.0]* 3.33 [78]**	3.14 [80]* 3.07 [78]**	5.7 [2.6]
	Standard housing with diffuser	0.20 [5]	9.72 [247]	4.02 [102]	0.39 [10]			5.04 [128]			7.04 [3.2]
TRT2	No housing tube	0.39 [10]	11.38 [289]	-	7.99 [203]	12.99 [330]		-			6.38 [2.9]
	Standard housing with diffuser	0.20 [5]	12.52 [318]	4.02 [102]	0.39 [10]			5.04 [128]			8.14 [3.7
TRT3	No housing tube	0.39 [10]	15.16 [385]	-	10.51 [267]	16.96 [430]	1.54 [39]	-			6.82 [3.1]
	Standard housing with diffuser	0.20 [5]	16.30 [414]	4.02 [102]	0.39 [10]			5.04 [128]			8.14 [3.7]
TRT4	No housing tube	0.39 [10]	19.65 [499]	-	13.23 [336]	21.26 [540]		-			7.48 [3.4]
	Standard housing with diffuser	0.20 [5]	20.75 [528]	4.02 [102]	0.39 [10]			5.01 [128]			9.46 [4.3]

*unworked port
**worked port

Return Line Filter

Dimensions
TRT1, 2, 3, 4

Specifications For The Tank Flange

1. In the filter mounting interface, the tank flange should have a maximum flatness of 0.3 mm and maximum roughness of Ra 3.2 µm.
2. In addition, the mounting interface should be free from damage and scratches.
3. The mounting holes of the flange must be blind, or stud bolts. Loctite must be used to mount the filter. As an alternative, the tank flange can be continuously welded from the inside.
4. Both the tank sheet metal and the filter mounting flange must be sufficiently robust so that neither deform when the seal is compressed during tightening.

TRT1, 2, 3, 4

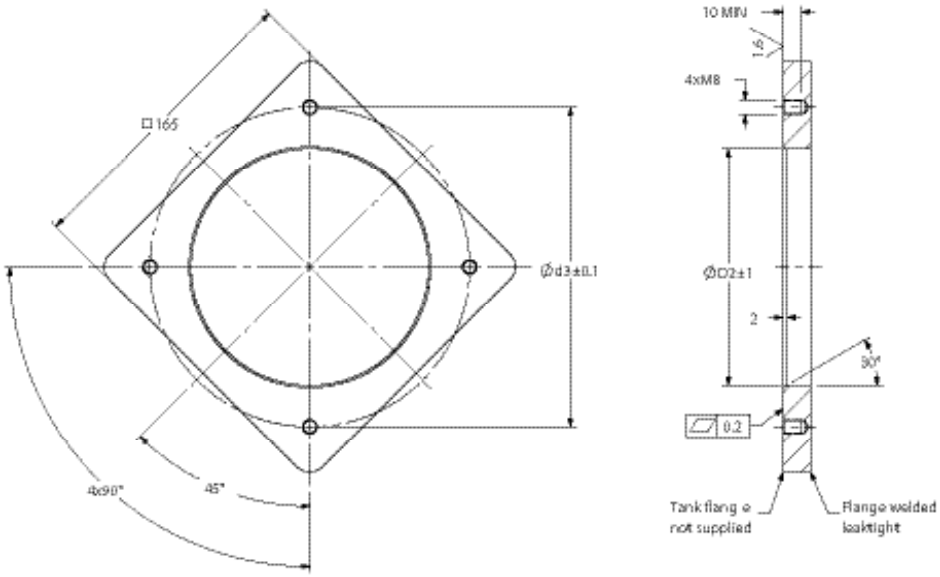

Pressure Drop Information

Based on Flow Rate and Viscosity

$\Delta P_{element}$

TRT1

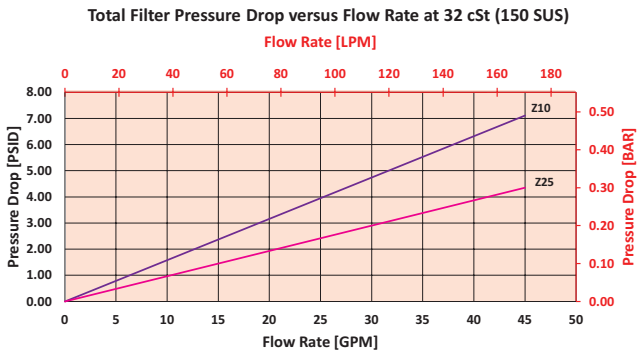

TRT2

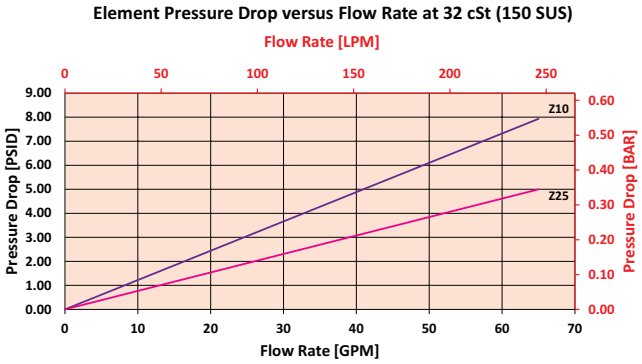

TRT3

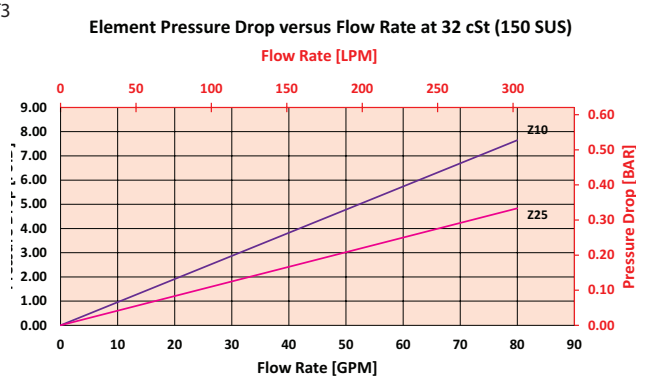

TRT4

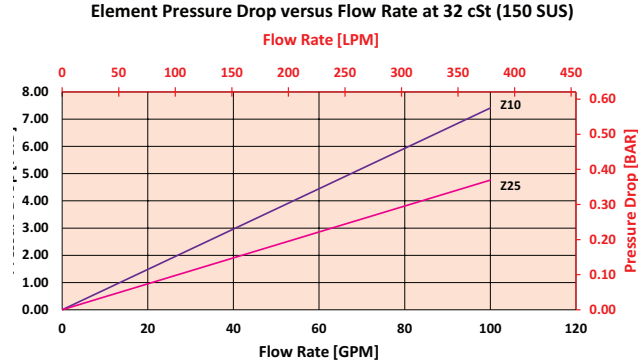

Return Line Filter

Filter Model Number Selection

How to Build a Valid Model Number for a Schroeder TRT:

BOX 1		BOX 2		BOX 3		BOX 4		BOX 5		BOX 6		BOX 7		BOX 8		BOX 9
TRT	–		–		–		–		–		–		–		–	

Example: NOTE: One option per box

BOX 1		BOX 2		BOX 3		BOX 4		BOX 5		BOX 6		BOX 7		BOX 8		BOX 9	
TRT	–	1RTZ	–	10	–		–		–	G	–		–		–		= TRT1RTZ10G

BOX 1

Filter Series
TRT

BOX 2

Size of Element
1RTZ
2RTZ
3RTZ
4RTZ

BOX 3

Micron Rating
5 = 5 µm
10 = 10 µm
25 = 25 µm

BOX 4

Bypass
Omit = standard 36 psi bypass
12 = 12 psi bypass

BOX 5

Magnet
Omit = no magnetic core
M = magnetic core

BOX 6

Porting
G = 1-½" BSPP
S = G 1-½" BSPP, SAE DN 40 (1-½")
S24 = SAE-24 (requires BSPP to SAE bushing to extend port to port dimensions)

BOX 7

Housing Option
Omit = standard housing with diffuser

BOX 8

Seal Material
Omit = Buna N
V = Viton®

BOX 9

Dirt Alarm® Options	
	Omit = No Indicator, sealed up w/ screw plug
Clogging Indicators	VA = visual/electrical
	VE = electrical
	VO = visual

Tank-Mounted Filter BFT

Model No. of filter in photograph is BFT1BBZ5F.

Features and Benefits

- Low pressure tank-mounted filter
- Designed for high return line flows
- Dual inlet porting options available
- Top, side or bottom mounting
- Optional check valve prevents reservoir siphoning
- Special filter element design provides aftermarket benefits
- Also available with DirtCatcher® element (BBD)
- Cast iron head available

300 gpm
1135 L/min
100 psi
7 bar

Filter Housing Specifications

Flow Rating:	Up to 300 gpm (1135 L/min) for 150 SUS (32 cSt) fluids
Max. Operating Pressure:	100 psi (7 bar)
Min. Yield Pressure:	250 psi (17 bar), per NFPA T2.6.1
Rated Fatigue Pressure:	Contact factory, per NFPA T2.6.1
Temp. Range:	-20°F to 225°F (-29°C to 107°C)
Bypass Setting:	Cracking: 25 psi (1.7 bar) Full Flow: 52 psi (3.6 bar)
Porting Head & Cap: Element Case:	Aluminum Steel
Weight of BFT-1BB:	36.7 lbs. (16.6 kg)
Element Change Clearance:	14.75" (375 mm)

Fluid Compatibility

Type Fluid	Appropriate Schroeder Media
Petroleum Based Fluids	All E media (cellulose) and Z-Media® (synthetic)
High Water Content	All Z-Media® (synthetic)
Invert Emulsions	10 and 25 µ Z-Media® (synthetic)
Water Glycols	3, 5, 10 and 25 µ Z-Media® (synthetic)
Phosphate Esters	All Z-Media® (synthetic) with H (EPR) seal designation
Skydrol®	3, 5, 10 and 25 µ Z-Media® (synthetic) with H.5 seal designation (EPR seals and stainless steel wire mesh in element, and light oil coating on housing exterior)

BFT Tank-Mounted Filter

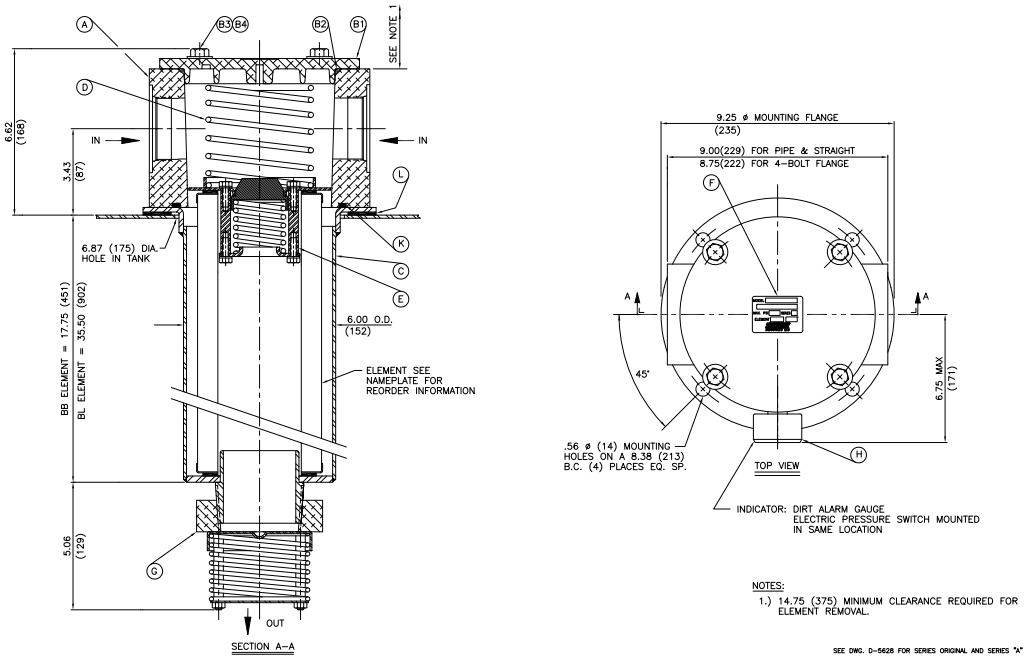

Metric dimensions in ( ).

Element Performance Information & Dirt Holding Capacity

Element	Filtration Ratio Per ISO 4572/NFPA T3.10.8.8 Using automated particle counter (APC) calibrated per ISO 4402			Filtration Ratio per ISO 16889 Using APC calibrated per ISO 11171	
	$ß_x \geq 75$	$ß_x \geq 100$	$ß_x \geq 200$	$ß_{x(c)} \geq 200$	$ß_{x(c)} \geq 1000$
BB/BLZ1	<1.0	<1.0	<1.0	<4.0	4.2
BB/BLZ3	<1.0	<1.0	<2.0	<4.0	4.8
BB/BLZ5	2.5	3.0	4.0	4.8	6.3
BB/BLZ10	7.4	8.2	10.0	8.0	10.0
BB/BLZ25	18.0	20.0	22.5	19.0	24.0

Element	DHC (gm)	Element	DHC (gm)	Element	DHC (gm)
BBZ1	268	BBDZ1	205	BLZ1	536
BBZ3	275	BBDZ3	163	BLZ3	550
BBZ5	301	BBDZ5	229	BLZ5	550
BBZ10	272	BBDZ10	183	BLZ10	550
BBZ25	246	BBDZ25	186	BLZ25	550

Element Collapse Rating: 150 psid (10 bar)

Flow Direction: Outside In

Element Nominal Dimensions: BB: 5.0" (125 mm) O.D. x 18.0" (460 mm) long
BL: 5.0" (125 mm) O.D. x 36.0" (920 mm) long

Pressure Drop Information

Based on Flow Rate and Viscosity

$\Delta P_{housing}$

BFT $\Delta P_{housing}$ for fluids with sp gr (specific gravity) = 0.86:

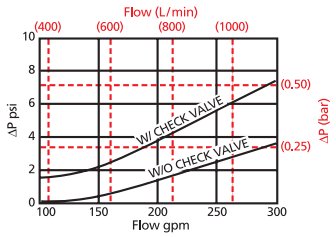

$\Delta P_{element}$

BBZ

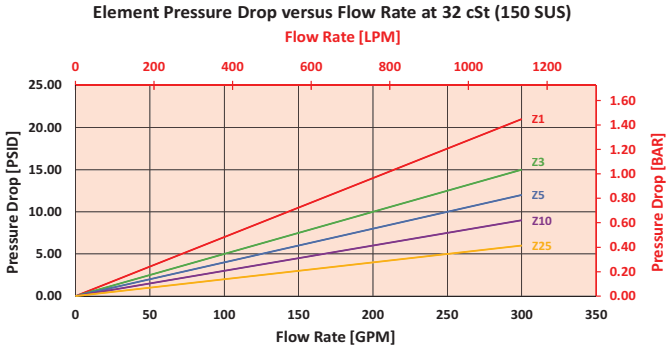

BLZ

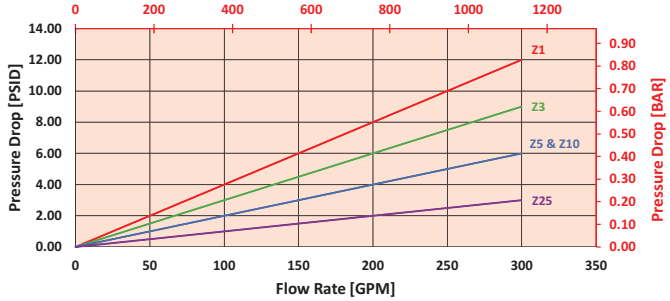

$$\Delta P_{filter} = \Delta P_{housing} + (\Delta P_{element} * V_f)$$

Exercise:

Determine ΔP_{filter} at 200 gpm (758 L/min) for BFT1BBZ10PY2 using 160 SUS (34 cSt) fluid.

Use the housing pressure curve to determine $\Delta P_{housing}$ at 200 gpm. In this case, $\Delta P_{housing}$ is 1.5 psi (.10 bar) on the graph for the BFT housing.

Use the element pressure curve to determine $\Delta P_{element}$ at 200 gpm. In this case, $\Delta P_{element}$ is 6 psi (.41 bar) according to the graph for the BBZ10 element.

Because the viscosity in this sample is 160 SUS (34 cSt), we determine the Viscosity Factor (V_f) by dividing the Operating Fluid Viscosity with the Standard Viscosity of 150 SUS (32 cSt). To best determine your Operating Fluid Viscosity, please reference the chart in Appendix D.

Finally, the overall filter pressure differential, ΔP_{filter}, is calculated by adding $\Delta P_{housing}$ with the true element pressure differential, ($\Delta P_{element} * V_f$). The $\Delta P_{element}$ from the graph has to be multiplied by the viscosity factor to get the true pressure differential across the element.

Solution:

$\Delta P_{housing}$ = 1.5 psi [.10 bar] | $\Delta P_{element}$ = 6 psi [.41 bar]

V_f = 160 SUS (34 cSt) / 150 SUS (32 cSt) = 1.1

ΔP_{filter} = 1.5 psi + (6 psi * 1.1) = 8.1 psi

OR

ΔP_{filter} = .10 bar + (.41 bar * 1.1) = .55 bar

Note:
If your element is not graphed, use the following equation:
$\Delta P_{element}$ = Flow Rate x $\Delta P_{f.}$ Plug this variable into the overall pressure drop equation.

Ele.	ΔP	Ele.	ΔP
BB10	0.03	BL10	0.01
BB25	0.01	BL25	0.01
BBDZ1	0.08	BLDZ1	0.16
BBDZ3	0.06	BLDZ3	0.12
BBDZ5	0.05	BLDZ5	0.10
BBDZ10	0.04	BLDZ10	0.08
BBDZ25	0.02	BLDZ25	0.04

Tank-Mounted Filter

Filter Model Number Selection

How to Build a Valid Model Number for a Schroeder KF3:

BOX 1	BOX 2	BOX 3	BOX 4	BOX 5	BOX 6	BOX 7	BOX 8	BOX 9	BOX 10
BFT –	–	–	–	–	–	–	–	–	–

Example: NOTE: Only box 10 may contain more than one option

BOX 1	BOX 2	BOX 3	BOX 4	BOX 5	BOX 6	BOX 7	BOX 8	BOX 9	BOX 10	
BFT –	1 –	BB10 –	–	P –	–	–	–	Y2 –	–	= BFT1BB10PY2

BOX 1

Filter Series
BFT

BOX 2

Number of Elements
1

BOX 3

Element Size and Media		
BB Length	BL Length	
BB3		= 3 µ E media (cellulose)
BB10		= 10 µ E media (cellulose)
BB25		= 25 µ E media (cellulose)
BBZ1	BLZ1	= 1 µ Excellement® Z-Media® (synthetic)
BBZ3	BLZ3	= 3 µ Excellement® Z-Media® (synthetic)
BBZ5	BLZ5	= 5 µ Excellement® Z-Media® (synthetic)
BBZ10	BLZ10	= 10 µ Excellement® Z-Media® (synthetic)
BBZ25	BLZ25	= 25 µ Excellement® Z-Media® (synthetic)
BBDZ1		= BB size DirtCatcher® 1 µ Excellement® Z-Media®
BBDZ3		= BB size DirtCatcher® 3 µ Excellement® Z-Media®
BBDZ5		= BB size DirtCatcher® 5 µ Excellement® Z-Media®
BBDZ10		= BB size DirtCatcher® 10 µ Excellement® Z-Media®
BBDZ25		= BB size DirtCatcher® 25 µ Excellement® Z-Media®

BOX 4

Seal Material
Omit = Buna N
H = EPR
W = Anodized Aluminum Parts
H.5 = Skydrol® compatibility

BOX 5

Porting
P = 2½" NPTF
PP = Dual 2½" NPTF
S = SAE-32
SS = Dual SAE-32
F = 2½"SAE 4-bolt flange Code 61
FF = Dual 2½"SAE 4-bolt flange Code 61

BOX 6

Bypass Setting
Omit = 25 psi cracking
40 = 40 psi cracking

BOX 7

Outlet Porting
Omit = 3" NPT male
T = 13" Tube extension

BOX 8

Optional Check Valve
Omit = None
C = Check valve

BOX 9

Dirt Alarm® Options		
	Omit =	None
Visual	Y2 =	Back-mounted tri-color gauge
	Y2R =	Back-mounted gauge mounted on opposite side of standard location
Electrical	ES =	Electric switch
	ESR =	Electric switch mounted on opposite side of standard location
	ES1 =	Heavy-duty electric switch with conduit connector
	ES1R =	Heavy-duty electric switch with conduit connector mounted on opposite side of standard location
	ES2 =	Electrical Switch with Deutsch Connector

BOX 10

Additional Options
Omit = None
G547 = Two ⅛" gauge ports
G1476 = Three-terminal electric switch
M = Metric thread for SAE 4-bolt flange mounting holes (specify after each port designation)
40 = 40 psi bypass setting

NOTES:

Box 3. Replacement element part numbers are identical to contents of Boxes 3 and 4. E media elements are only available with Buna N seals.

Box 4. For options H, W, and H.5 all aluminum parts are anodized. H.5 seal designation includes the following: EPR seals, stainless steel wire mesh on elements, and light oil coating on housing exterior. Skydrol® is a registered trademark of Solutia Inc.

Box 8. See also "Accessories for Tank-Mounted Filters," page 307.

Tank-Mounted Filter QT

Model No. of filter in photograph is QT39QZ10P48D5C.

Features and Benefits

- Low pressure tank-mounted filter
- Designed for high return line flows
- Tank-mounted unit saves space, reduces plumbing
- Cap handles provide for easy element changeout
- Offered with standard Q, QW, and QPML deep-pleated elements in 16" and 39" lengths with Viton® seals as the standard seal option

450 gpm
1700 L/min
100 psi
7 bar

Filter Housing Specifications

Flow Rating:	Up to 450 gpm (1700 L/min) for 150 SUS (32 cSt) fluids
Max. Operating Pressure:	100 psi (7 bar)
Min. Yield Pressure:	300 psi (21 bar), per NFPA T2.6.1
Rated Fatigue Pressure:	100 psi (7 bar), per NFPA T2.6.1-R1-2005
Temp. Range:	-20°F to 225°F (-29°C to 107°C)
Bypass Setting:	Cracking: 30 psi (2.1 bar) Full Flow: 55 psi (3.8 bar)
Porting Head: Element Case:	Steel Steel
Min. Weight of QT-16Q: Min. Weight of QT-39Q:	100.0 lbs. (46 kg) 158.0 lbs. (72 kg)
Element Change Clearance:	16Q 12.0" (305 mm) 39Q 33.8" (859 mm)

Fluid Compatibility

Type Fluid	Appropriate Schroeder Media
Petroleum Based Fluids	All E media (cellulose), Z-Media® and ASP® media (synthetic)
High Water Content	All Z-Media® and ASP® media (synthetic)
Invert Emulsions	10 and 25 µ Z-Media® and 10 µ ASP® media (synthetic)
Water Glycols	3, 5, 10 and 25 µ Z-Media® and all ASP® media (synthetic)
Phosphate Esters	All Z-Media® (synthetic) with H (EPR) seal designation and all ASP® media (synthetic)

Tank-Mounted Filter

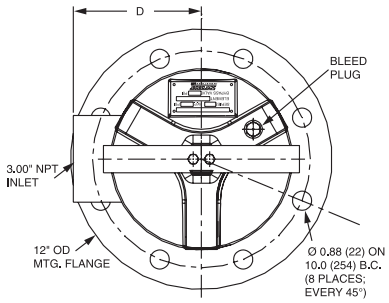

TOP VIEW

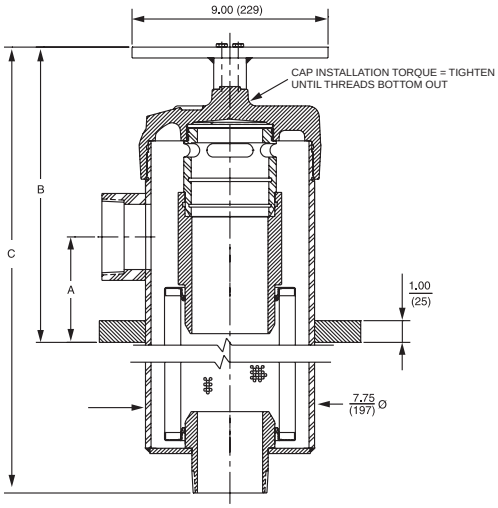

SECTION A-A

INLET PORT SIZE*	DIMENSIONS			
	A	B	C	D
3"	4.85 (123)	14.62 (371)	16Q: 30.43 (773) 39Q: 52.25 (1327)	5.88 (149)
4"	5.75 (146)	16.12 (409)	16Q: 30.43 (773) 39Q: 52.25 (1327)	6.13 (156)

*Outlet port is always 3".

Metric dimensions in ( ).

Element Performance Information & Dirt Holding Capacity

Element		Filtration Ratio Per ISO 4572/NFPA T3.10.8.8 Using automated particle counter (APC) calibrated per ISO 4402			Filtration Ratio per ISO 16889 Using APC calibrated per ISO 11171	
		$ß_x \geq 75$	$ß_x \geq 100$	$ß_x \geq 200$	$ß_x(c) \geq 200$	$ß_x(c) \geq 1000$
16Q	Z1/PMLZ1	<1.0	<1.0	<1.0	<4.0	4.2
	Z3/PMLZ3	<1.0	<1.0	<2.0	<4.0	4.8
	Z5/PMLZ5	2.5	3.0	4.0	4.8	6.3
	Z10/PMLZ10	7.4	8.2	10.0	8.0	10.0
	Z25/PMLZ25	18.0	20.0	22.5	19.0	24.0
39Q	Z1/PMLZ1	<1.0	<1.0	<1.0	<4.0	4.2
	Z3/PMLZ3	<1.0	<1.0	<2.0	<4.0	4.8
	Z5/PMLZ5	2.5	3.0	4.0	4.8	6.3
	Z10/PMLZ10	7.4	8.2	10.0	8.0	10.0
	Z25/PMLZ25	18.0	20.0	22.5	19.0	24.0

Element		DHC (gm)	Element	DHC (gm)
16Q	Z1	276	PMLZ1	307
	Z3	283	PMLZ3	315
	Z5	351	PMLZ5	364
	Z10	280	PMLZ10	330
	Z25	254	PMLZ25	299
39Q	Z1	974	PMLZ1	1485
	Z3	1001	PMLZ3	1525
	Z5	954	PMLZ5	1235
	Z10	940	PMLZ10	1432
	Z25	853	PMLZ25	1299

Element Collapse Rating: Q and QPML: 150 psid (10 bar)

Flow Direction: Outside In

Element Nominal Dimensions:
16Q: 6.0" (150 mm) O.D. x 16.85" (430 mm) long
16QPML: 6.0" (150 mm) O.D. x 16.00" (405 mm) long
39Q: 6.0" (150 mm) O.D. x 38.70" (985 mm) long
39QPML: 6.0" (150 mm) O.D. x 37.80" (960 mm) long

Pressure Drop Information

Based on Flow Rate and Viscosity

$\Delta P_{housing}$

QT $\Delta P_{housing}$ for fluids with sp gr (specific gravity) = 0.86:

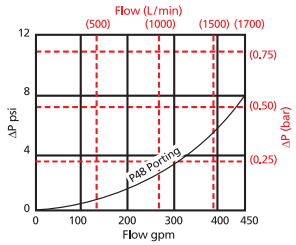

$\Delta P_{element}$

39QZ

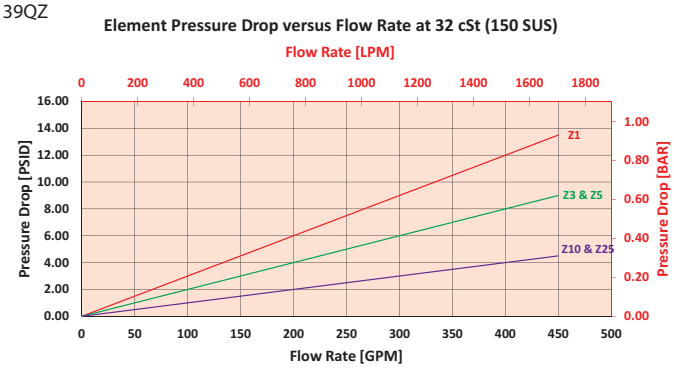

39QPMLZ

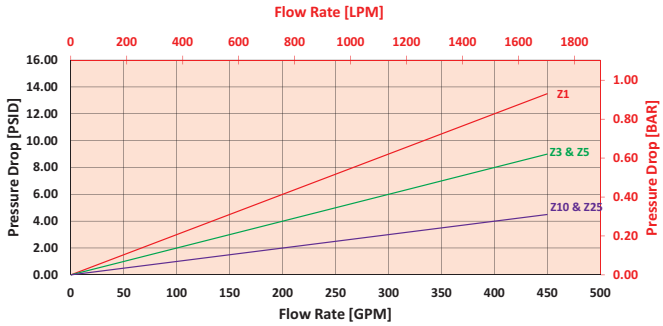

$$\Delta P_{filter} = \Delta P_{housing} + (\Delta P_{element} * V_f)$$

Exercise:

Determine ΔP_{filter} at 200 gpm (758 L/min) for QT16QZ3P48D5C using 160 SUS (34 cSt) fluid.

Use the housing pressure curve to determine $\Delta P_{housing}$ at 200 gpm. In this case, $\Delta P_{housing}$ is 2 psi (.14 bar) on the graph for the QT housing.

Use the element pressure curve to determine $\Delta P_{element}$ at 200 gpm. In this case, $\Delta P_{element}$ is 8 psi (.55 bar) according to the graph for the 16QZ3 element.

Because the viscosity in this sample is 160 SUS (34 cSt), we determine the Viscosity Factor (V_f) by dividing the Operating Fluid Viscosity with the Standard Viscosity of 150 SUS (32 cSt). To best determine your Operating Fluid Viscosity, please reference the chart in Appendix D.

Finally, the overall filter pressure differential, ΔP_{filter}, is calculated by adding $\Delta P_{housing}$ with the true element pressure differential, ($\Delta P_{element} * V_f$). The $\Delta P_{element}$ from the graph has to be multiplied by the viscosity factor to get the true pressure differential across the element.

Solution:

$\Delta P_{housing}$ = 2 psi [.14 bar] | $\Delta P_{element}$ = 8 psi [.55 bar]

V_f = 160 SUS (34 cSt) / 150 SUS (32 cSt) = 1.1

ΔP_{filter} = 2 psi + (8 psi * 1.1) = 10.8 psi

OR

ΔP_{filter} = .14 bar + (.55 bar * 1.1) = .75 bar

Note:
If your element is not graphed, use the following equation:
$\Delta P_{element}$ = Flow Rate x ΔP_f Plug this variable into the overall pressure drop equation.

Ele.	ΔP	Ele.	ΔP
16QAS3V	0.04	16QPMLZ1	0.08
16QAS5V	0.04	16QPMLZ3	0.05
16QAS10V	0.03	16QPMLZ5	0.05
16QPMLAS3V	0.05	16QPMLZ10	0.04
16QPMLAS5V	0.05	16QPMLZ25	0.02
16QPMLAS10V	0.04	39QAS3V	0.01
16QZ1	0.09	39QAS5V	0.01
16QZ3	0.04	39QAS10V	0.01
16QZ5	0.04	39QPMLAS3V	0.02
16QZ10	0.03	39QPMLAS5V	0.02
16QZ25	0.01	39QPMLAS10V	0.01

QT Tank-Mounted Filter

Filter Model Number Selection

How to Build a Valid Model Number for a Schroeder QT:

BOX 1	BOX 2	BOX 3	BOX 4	BOX 5	BOX 6	BOX 7	BOX 8	BOX 9	BOX 10
QT									

Example: NOTE: One option per box

BOX 1	BOX 2	BOX 3	BOX 4	BOX 5	BOX 6	BOX 7	BOX 8	BOX 9	BOX 10	
QT	16	Q	Z	3		P48			D5C	= QT16QZ3P48D5C

BOX 1 — Filter Series

QT

BOX 2 — Element Length (in)

16
39

BOX 3 — Element Style

Q
QCLQF
QPML

BOX 4 — Media Type

Z	= Excellement® Z-Media® (synthetic)
W	= W media (water removal)
AS	= Anti-Static Pleat Media (synthetic)

BOX 5 — Micron Rating

1	= 1 µ Z-Media®
3	= 3 µ AS and Z-Media®
5	= 5 µ AS and Z-Media®
10	= 10 µ AS and Z-Media®
25	= 25 µ Z-Media®

BOX 6 — Housing Seal Material

Omit	= Buna N
H	= EPR
V	= Viton®

BOX 7 — Inlet Porting

P48	= 3" NPTF
P64	= 4" NPTF

BOX 8 — Bypass Setting

Omit	= 30 psi cracking
X	= Blocked bypass
50	= 50 psi cracking

BOX 9 — Outlet Porting

Omit	= 3" NPT Male
C	= Check valve
D	= Diffuser
CD	= Check valve and diffuser

BOX 10 — Dirt Alarm® Options

	Omit	= None
Visual	D5C	= Visual pop-up in cap
Visual with Thermal Lockout	D8C	= Visual w/ thermal lockout in cap
Electrical	MS5C	= Electrical w/ 12 in. 18 gauge 4-conductor cable in cap
	MS5LCC	= Low current MS5 in cap
	MS10C	= Electrical w/ DIN connector (male end only) in cap
	MS10LCC	= Low current MS10 in cap
	MS11C	= Electrical w/ 12 ft. 4-conductor wire in cap
	MS12C	= Electrical w/ 5 pin Brad Harrison connector (male end only) in cap
	MS12LCC	= Low current MS12 in cap
	MS16C	= Electrical w/ weather-packed sealed connector in cap
	MS16LCC	= Low current MS16 in cap
	MS17LCC	= Electrical w/ 4 pin Brad Harrison male connector in cap
Electrical with Thermal Lockout	MS5T	= MS5 (see above) w/ thermal lockout in cap
	MS5LCT	= Low current MS5T in cap
	MS10TC	= MS10 (see above) w/ thermal lockout in cap
	MS10LCTC	= Low current MS10T in cap
	MS12TC	= MS12 (see above) w/ thermal lockout
	MS12LCTC	= Low current MS12T in cap
	MS16TC	= MS16 (see above) w/ thermal lockout in cap
	MS16LCTC	= Low current MS16T in cap
	MS17LCTC	= Low current MS17T in cap
Electrical Visual	MS13C	= Supplied w/ threaded connector & light in cap
	MS14C	= Supplied w/ 5 pin Brad Harrison connector & light (male end) in cap
Electrical Visual with Thermal Lockout	MS13DCTC	= MS13 (see above), direct current, w/ thermal lockout in cap
	MS13DCLCTC	= Low current MS13DCT in cap
	MS14DCTC	= MS14 (see above), direct current, w/ thermal lockout in cap
	MS14DCLCTC	= Low current MS14DCT in cap

NOTES:

Box 2. Replacement element part numbers are a combination of Boxes 2, 3, 4 and 5, plus the letter V. Example: 16QZ1V

Box 3. QCLQF element are not available in ASP® media.

Box 4. E media elements are also available for the QT filter housing. Contact factory for more information.

Box 4. For Option W, Box 3 must equal Q.

Box 6. Viton® is a registered trademark of DuPont Dow Elastomers. All elements for this filter are supplied with Viton® seals. Seal designation in Box 6 applies to housing only.

Tank-Mounted Filter Kit

KTK

100 gpm
380 L/min
100 psi
7 bar

Model No. of filter in photograph is KTKKKZ10.

Features and Benefits

- Special tank-mounted filter kit
- Includes: cap assembly, weld ring assembly, element and bushing
- Available with standard K, KK or 27K-size elements
- Bypass valve in cap assembly

Filter Housing Specifications

Flow Rating:	Up to 100 gpm (380 L/min) for 150 SUS (32 cSt) fluids
Max. Operating Pressure:	100 psi (7 bar) exclusive of tank design
Min. Yield Pressure:	Contact factory
Rated Fatigue Pressure:	Contact factory
Temp. Range:	-20°F to 225°F (-29°C to 107°C)
Bypass Setting:	Cracking: 25 psi (1.7 bar) Full Flow: 40 psi (2.8 bar)
Porting Cap: Weld Ring:	Die Cast Aluminum Steel
Element Change Clearance:	8.0" (205 mm) for K; 17.50" (445 mm) for KK; 26.5" (673 mm) for 27K

Fluid Compatibility

Type Fluid	Appropriate Schroeder Media
Petroleum Based Fluids	All E media (cellulose), Z-Media® and ASP® media (synthetic)
High Water Content	All Z-Media® and all ASP® media (synthetic)
Invert Emulsions	10 and 25 µ Z-Media® and 10 µ ASP® media (synthetic)
Water Glycols	3, 5, 10 and 25 µ Z-Media® and all ASP® media (synthetic)
Phosphate Esters	All Z-Media® (synthetic) with H (EPR) seal designation and 3 and 10 µ E media (cellulose) with H (EPR) seal designation and ASP® media (synthetic)
Skydrol®	3, 5, 10 and 25 µ Z-Media® (synthetic) with H.5 seal designation (EPR seals and stainless steel wire mesh in element, and light oil coating on housing exterior) and all ASP® media (synthetic)

KTK Tank-Mounted Filter Kit

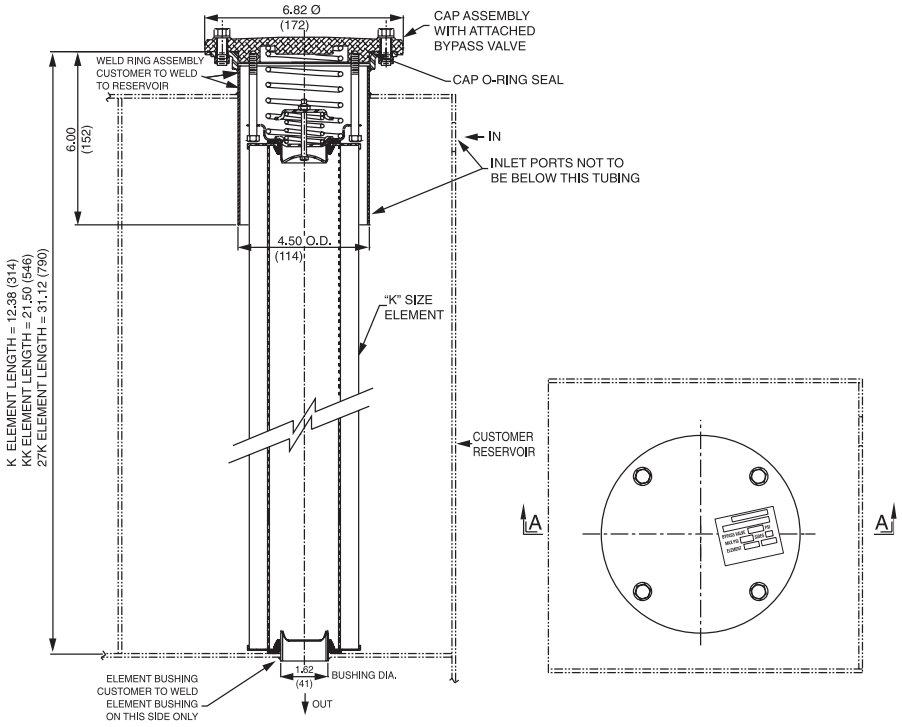

SECTION A-A

Metric dimensions in ( ).

Kit includes cap assembly, weld ring assembly, element, and bushing.

Element Performance Information & Dirt Holding Capacity

Element	Filtration Ratio Per ISO 4572/NFPA T3.10.8.8 Using automated particle counter (APC) calibrated per ISO 4402			Filtration Ratio per ISO 16889 Using APC calibrated per ISO 11171	
	$ß_x \geq 75$	$ß_x \geq 100$	$ß_x \geq 200$	$ß_x(c) \geq 200$	$ß_x(c) \geq 1000$
KZ1	<1.0	<1.0	<1.0	<4.0	4.2
KZ3	<1.0	<1.0	<2.0	<4.0	4.8
KZ5	2.5	3.0	4.0	4.8	6.3
KZ10	7.4	8.2	10.0	8.0	10.0
KZ25	18.0	20.0	22.5	19.0	24.0
KZW1	N/A	N/A	N/A	<4.0	<4.0
KZW3/KKZW3	N/A	N/A	N/A	4.0	4.8
KZW5/KKZW5	N/A	N/A	N/A	5.1	6.4
KZW10/KKZW10	N/A	N/A	N/A	6.9	8.6
KZW25/KKZW25	N/A	N/A	N/A	15.4	18.5

Element	DHC (gm)	Element	DHC (gm)	Element	DHC (gm)	Element	DHC (gm)	Element	DHC (gm)
KZ1	112	KKZ1	224	27KZ1	336	KZW1	61		
KZ3	115	KKZ3	230	27KZ3	345	KZW3	64	KKZW3	128
KZ5	119	KKZ5	238	27KZ5	357	KZW5	63	KKZW5	126
KZ10	108	KKZ10	216	27KZ10	324	KZW10	57	KKZW10	114
KZ25	93	KKZ25	186	27KZ25	279	KZW25	79	KKZW25	158

Element Collapse Rating: 150 psid (10 bar) for standard elements

Flow Direction: Outside In

Element Nominal Dimensions: 3.9" (99 mm) O.D. x 9.0" (230 mm) long

Pressure Drop Information

Based on Flow Rate and Viscosity

*KTK Dirty Box Pressure Drop is Customer Tank Design Dependant. Please account for this when designing system.

$\Delta P_{element}$

KZ

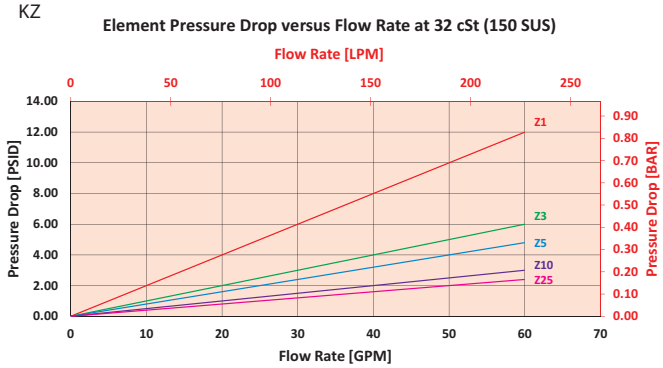

KKZ

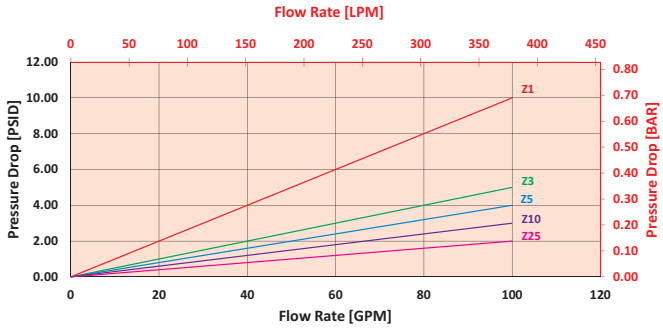

$$\Delta P_{filter} = \Delta P_{housing} + (\Delta P_{element} * V_f)$$

Exercise:

Determine ΔP_{filter} at 80 gpm (303.2 L/min) for KTKKZ3 using 160 SUS (34 cSt) fluid.

Use the element pressure curve to determine $\Delta P_{element}$ at 80 gpm. In this case, $\Delta P_{element}$ is 8 psi (.55 bar) according to the graph for the KZ3 element.

Because the viscosity in this sample is 160 SUS (34 cSt), we determine the Viscosity Factor (V_f) by dividing the Operating Fluid Viscosity with the Standard Viscosity of 150 SUS (32 cSt). To best determine your Operating Fluid Viscosity, please reference the chart in Appendix D.

Finally, the overall filter pressure differential, ΔP_{filter}, is calculated by adding $\Delta P_{housing}$ with the true element pressure differential, ($\Delta P_{element} * V_f$). The $\Delta P_{element}$ from the graph has to be multiplied by the viscosity factor to get the true pressure differential across the element.

Solution:

$\Delta P_{element}$ = 8 psi [.55 bar]

V_f = 160 SUS (34 cSt) / 150 SUS (32 cSt) = 1.1

ΔP_{filter} = (8 psi * 1.1) = 8.8 psi

OR

ΔP_{filter} = (.55 bar * 1.1) = .61 bar

Note:
If your element is not graphed, use the following equation:
$\Delta P_{element}$ = Flow Rate x ΔP_f Plug this variable into the overall pressure drop equation.

Ele.	ΔP	Ele.	ΔP	Ele.	ΔP
K3	0.25	2K3/ KK3	0.12	3KZ1/ 27KZ1	0.05
K10	0.09	2K10/ KK10	0.05	3KZ3/ 27KZ3	0.03
K25	0.02	2K25/ KK25	0.01	3KZ5/ 27KZ5	0.02
KAS3	0.10	2KAS3/ KKAS3	0.05	3KZ10/ 27KZ10	0.02
KAS5	0.08	2KAS5/ KKAS5	0.04	3KZ25/ 27KZ25	0.01
KAS10	0.05	2KAS10/ KKAS10	0.03	3K3	0.08
KZW1	0.43	2KZW1	-	3K10	0.03
KZW3	0.32	2KZW3/ KKZW3	0.16	3K25	0.01
KZW5	0.28	2KZW5/ KKZW5	0.14	3KAS3/ 27KAS3	0.03
KZW10	0.23	2KZW10/ KKZW10	0.12	3KAS5/ 27KAS5	0.02
KZW25	0.14	2KZW25/ KKZW25	0.07	3KAS10/ 27KAS10	0.02

Tank-Mounted Filter Kit

Filter Model Number Selection

How to Build a Valid Model Number for a Schroeder KTK:

BOX 1		BOX 2		BOX 3		BOX 4		BOX 5
KTK	–		–		–		–	

Example: NOTE: One option per box

BOX 1		BOX 2		BOX 3		BOX 4		BOX 5	
KTK	–	K	–	Z3	–		–		= KTKKZ3

BOX 1

Filter Series
KTK

BOX 2

Element Length
K
KK
27K

BOX 3

Element Part Number
3 = 3 µ E media (cellulose)
10 = 10 µ E media (cellulose)
25 = 25 µ E media (cellulose)
Z1 = 1 µ Excellement® Z-Media® (synthetic)
Z3/AS3 = 3 µ Excellement® Z-Media® (synthetic)
Z5/AS5 = 5 µ Excellement® Z-Media® (synthetic)
Z10/AS10 = 10 µ Excellement® Z-Media® (synthetic)
Z25 = 25 µ Excellement® Z-Media® (synthetic)
ZW1 = 1 µ Aqua-Excellement™ ZW media
ZW3 = 3 µ Aqua-Excellement™ ZW media
ZW5 = 5 µ Aqua-Excellement™ ZW media
ZW10 = 10 µ Aqua-Excellement™ ZW media
ZW25 = 25 µ Aqua-Excellement™ ZW media
ZW1 = 1 µ Aqua-Excellement™ ZW media
ZW3 = 3 µ Aqua-Excellement™ ZW media
ZW5 = 5 µ Aqua-Excellement™ ZW media
ZW10 = 10 µ Aqua-Excellement™ ZW media
ZW25 = 25 µ Aqua-Excellement™ ZW media

BOX 4

Seal Material
Omit = Buna N
H = EPR
W = Buna N
H.5 = Skydrol® Compatibility

BOX 5

Dirt Alarm® Options	
Omit = None	
Visual	Y2C = Bottom-mounted gauge in cap

NOTES:

Box 3. Replacement element part numbers are identical to contents of Boxes 2, 3, and 4.

Box 4. For options H and W, cap is anodized. H.5 seal designation includes the following: EPR seals, stainless steel wire mesh on elements, and light oil coating on housing exterior. Skydrol® is a registered trademark of Solutia Inc.

Tank-Mounted Filter Kit

LTK

Model No. of filter in photograph is LTK18LZ3.

Features and Benefits

- Special tank-mounted filter kit
- Includes: cap assembly, weld ring assembly, element and bushing
- Available with standard 18L sized element
- Bypass valve in cap assembly

150 gpm
570 L/min

100 psi
7 bar

Filter Housing Specifications

Flow Rating:	Up to 150 gpm (570 L/min) for 150 SUS (32 cSt) fluids
Max. Operating Pressure:	100 psi (7 bar) exclusive of tank design
Min. Yield Pressure:	Contact factory
Rated Fatigue Pressure:	Contact factory
Temp. Range:	-20°F to 225°F (-29°C to 107°C)
Bypass Setting:	Cracking: 25 psi (1.7 bar) Full Flow: 47 psi (3.2 bar)
Porting Cap: Weld Ring:	Die Cast Aluminum Steel
Element Change Clearance:	17.0" (435 mm)

Fluid Compatibility

Type Fluid	Appropriate Schroeder Media
Petroleum Based Fluids	All E media (cellulose) and Z-Media® (synthetic)
High Water Content	All Z-Media® (synthetic)
Invert Emulsions	10 and 25 µ Z-Media® (synthetic)
Water Glycols	3, 5, 10 and 25 µ Z-Media® (synthetic)
Phosphate Esters	All Z-Media® (synthetic) with H (EPR) seal designation and 3 and 10 µ E media (cellulose) with H (EPR) seal designation
Skydrol®	3, 5, 10 and 25 µ Z-Media® (synthetic) with H.5 seal designation (EPR seals and stainless steel wire mesh in element, and light oil coating on housing exterior)

Tank-Mounted Filter Kit

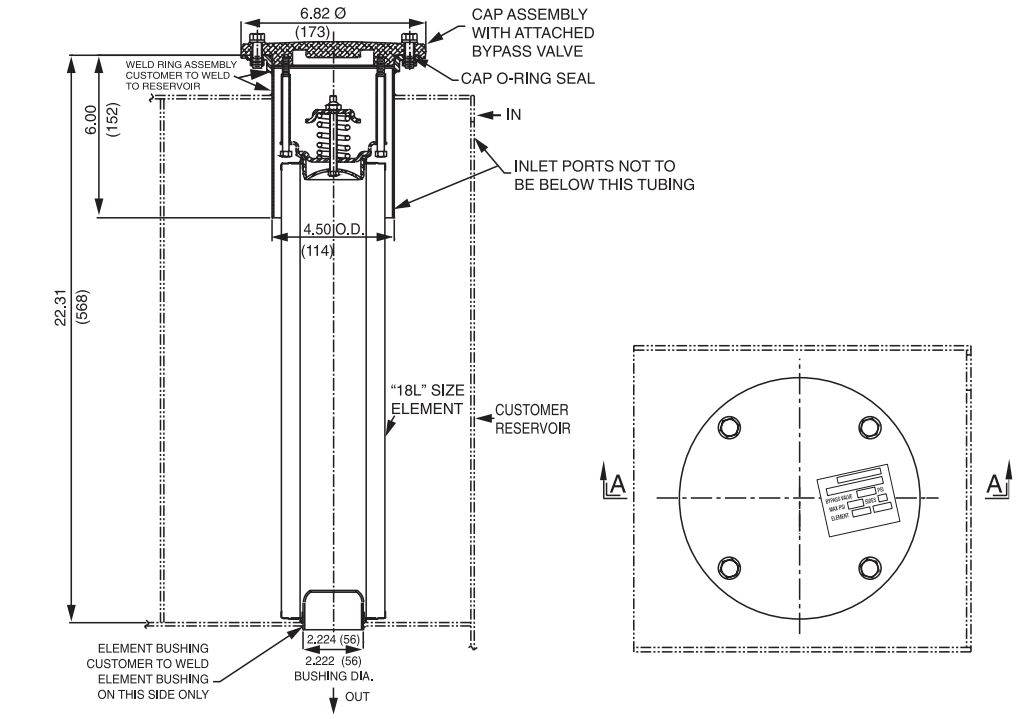

Metric dimensions in ( ).

SECTION A-A

Element Performance Information & Dirt Holding Capacity

Element	Filtration Ratio Per ISO 4572/NFPA T3.10.8.8 Using automated particle counter (APC) calibrated per ISO 4402			Filtration Ratio per ISO 16889 Using APC calibrated per ISO 11171	
	$ß_x \geq 75$	$ß_x \geq 100$	$ß_x \geq 200$	$ß_x(c) \geq 200$	$ß_x(c) \geq 1000$
18LZ1	<1.0	<1.0	<1.0	<4.0	4.2
18LZ3	<1.0	<1.0	<2.0	<4.0	4.8
18LZ5	2.5	3.0	4.0	4.8	6.3
18LZ10	7.4	8.2	10.0	8.0	10.0
18LZ25	18.0	20.0	22.5	19.0	24.0

Element	DHC (gm)
18LZ1	224
18LZ3	230
18LZ5	238
18LZ10	216
18LZ25	186

Element Collapse Rating:	150 psid (10 bar)
Flow Direction:	Outside In
Element Nominal Dimensions:	4.0" (100 mm) O.D. x 18.5" (470 mm) long

Pressure Drop Information
Based on Flow Rate and Viscosity

*LTK Dirty Box Pressure Drop is Customer Tank Design Dependant.
Please account for this when designing system.

$\Delta P_{element}$

18LZ

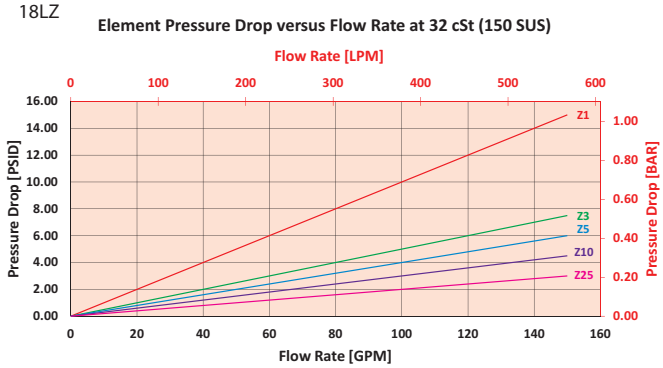

$$\Delta P_{filter} = \Delta P_{housing} + (\Delta P_{element} * V_f)$$

Exercise:

Determine ΔP_{filter} at 80 gpm (303.2 L/min) for LTK18LKZ3 using 160 SUS (34 cSt) fluid.

Use the element pressure curve to determine $\Delta P_{element}$ at 80 gpm. In this case, $\Delta P_{element}$ is 4 psi (.27 bar) according to the graph for the 18LZ3 element.

Because the viscosity in this sample is 160 SUS (34 cSt), we determine the Viscosity Factor (V_f) by dividing the Operating Fluid Viscosity with the Standard Viscosity of 150 SUS (32 cSt). To best determine your Operating Fluid Viscosity, please reference the chart in Appendix D.

Finally, the overall filter pressure differential, ΔP_{filter}, is calculated by adding $\Delta P_{housing}$ with the true element pressure differential, ($\Delta P_{element} * V_f$). The $\Delta P_{element}$ from the graph has to be multiplied by the viscosity factor to get the true pressure differential across the element.

Solution:

$\Delta P_{element}$ = 4 psi [.27 bar]

V_f = 160 SUS (34 cSt) / 150 SUS (32 cSt) = 1.1

ΔP_{filter} = (4 psi * 1.1) = 4.4 psi

OR

ΔP_{filter} = (.27 bar * 1.1) = .30 bar

Tank-Mounted Filter Kit

Filter Model Number Selection

How to Build a Valid Model Number for a Schroeder LTK:

BOX 1		BOX 2		BOX 3		BOX 4		BOX 5
LTK	–		–		–		–	

Example: NOTE: One option per box

BOX 1		BOX 2		BOX 3		BOX 4		BOX 5	
LTK	–	18	–	LZ3	–		–		= LTK18LZ3

BOX 1

Filter Series
LTK

BOX 2

Length of Element (in)
18

BOX 3

Element Size and Media
L3 = L size 3 µ E media (cellulose)
L10 = L size 10 µ E media (cellulose)
L25 = L size 25 µ E media (cellulose)
LZ1 = L size 1 µ Excellement® Z-Media® (synthetic)
LZ3 = L size 3 µ Excellement® Z-Media® (synthetic)
LZ5 = L size 5 µ Excellement® Z-Media® (synthetic)
LZ10 = L size 10 µ Excellement® Z-Media® (synthetic)
LZ25 = L size 25 µ Excellement® Z-Media® (synthetic)

BOX 4

Seal Material
Omit = Buna N
H = EPR
W = Buna N
H.5 = Skydrol® Compatibility

BOX 5

Dirt Alarm® Options	
	Omit = None
Visual	Y2C = Bottom-mounted gauge in cap

NOTES:

Box 2. Replacement element part numbers are a combination of Boxes 2, 3, and 4. Example: 18LZ3H

Box 4. For options H and W, cap is anodized. H.5 seal designation includes the following: EPR seals, stainless steel wire mesh on elements, and light oil coating on housing exterior. Skydrol® is a registered trademark of Solutia Inc.

Medium Pressure In-Tank Filter

MRT

Model No. of filter in photograph is MRT18LZ10S24S24D5.

Features and Benefits

- Medium pressure tank mounted filter ideal for applications with high pressure surge in the return line
- Two possible inlet porting locations
- Various Dirt Alarm® options available
- Also available with DirtCatcher® element
- Optional sampling fitting available upon request

150 gpm
570 L/min
900 psi
62 bar

Filter Housing Specifications

Flow Rating:	Up to 150 gpm (570 L/min) for 150 SUS (32 cSt) fluids
Max. Operating Pressure:	900 psi (62 bar)
Min. Yield Pressure:	2700 psi (186 bar), per NFPA T2.6.1
Rated Fatigue Pressure:	750 psi (52 bar), per NFPA T2.6.1-2005
Temp. Range:	-20°F to 225°F (-29°C to 107°C)
Bypass Setting:	Cracking: 40 psi (2.8 bar)
Porting Head & Cap: Element Case:	Cast Aluminum (Anodized) Steel
Weight of MRT:	36.0 lbs. (16.4 kg)
Element Change Clearance:	17.0" (432 mm)

Fluid Compatibility

Type Fluid	Appropriate Schroeder Media
Petroleum Based Fluids	All E media (cellulose) and Z-Media® (synthetic)
High Water Content	All Z-Media® (synthetic)
Invert Emulsions	10 and 25 µ Z-Media® (synthetic)
Water Glycols	3, 5, 10 and 25 µ Z-Media® (synthetic)

Medium Pressure In-Tank Filter

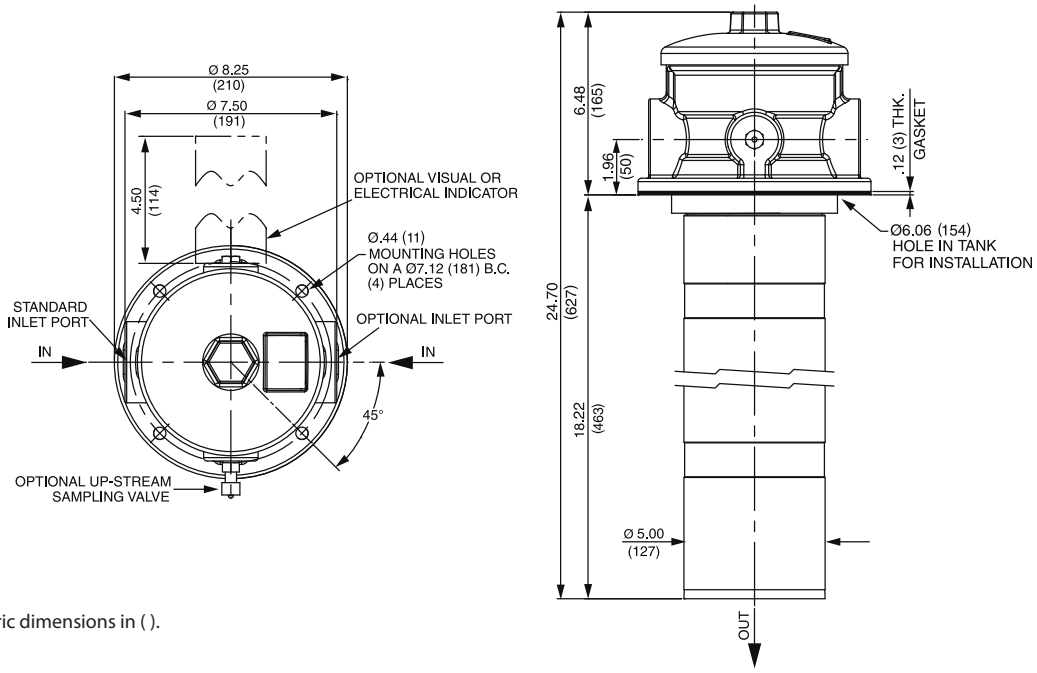

Metric dimensions in ( ).

Element Performance Information & Dirt Holding Capacity

	Filtration Ratio Per ISO 4572/NFPA T3.10.8.8 Using automated particle counter (APC) calibrated per ISO 4402			Filtration Ratio per ISO 16889 Using APC calibrated per ISO 11171	
Element	$ß_x \geq 75$	$ß_x \geq 100$	$ß_x \geq 200$	$ß_x(c) \geq 200$	$ß_x(c) \geq 1000$
18LZ1	<1.0	<1.0	<1.0	<4.0	4.2
18LZ3	<1.0	<1.0	<2.0	<4.7	5.8
18LZ5	2.5	3.0	4.0	6.5	7.5
18LZ10	7.4	8.2	10.0	10.0	12.7
18LZ25	18.0	20.0	22.5	19.0	24.0
18LDZ1	<1.0	<1.0	<1.0	<4.0	4.2
18LDZ3	<1.0	<1.0	<2.0	<4.7	5.8
18LDZ5	2.5	3.0	4.0	6.5	7.5
18LDZ10	7.4	8.2	10.0	10.0	12.7
18LDZ25	18.0	20.0	22.5	19.0	24.0

Element	DHC (gm)	Element	DHC (gm)
18LZ1	224	18LDZ1	194
18LZ3	230	18LDZ3	199
18LZ5	238	18LDZ5	149
18LZ10	216	18LDZ10	186
18LZ25	186	18LDZ25	169

Element Collapse Rating: 150 psid (10 bar)

Flow Direction: Outside In

Element Nominal Dimensions: 4.0" (100 mm) O.D. x 18.5" (470 mm) long

Pressure Drop Information
Based on Flow Rate and Viscosity

$\Delta P_{housing}$

MRT $\Delta P_{housing}$ for fluids with sp gr (specific gravity) = 0.86:

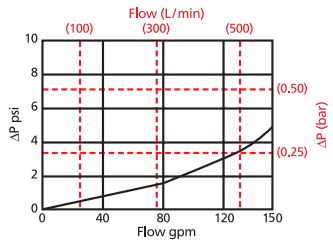

$\Delta P_{element}$

18LZ

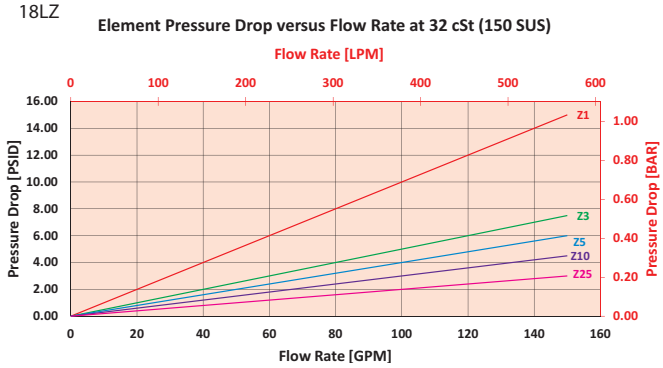

18LDZ

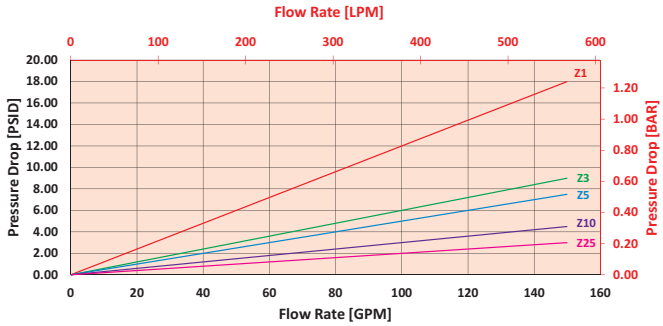

$$\Delta P_{filter} = \Delta P_{housing} + (\Delta P_{element} * V_f)$$

Exercise:

Determine ΔP_{filter} at 80 gpm (303.2 L/min) for MRT18LZ10S24S24 using 160 SUS (34 cSt) fluid.

Use the housing pressure curve to determine $\Delta P_{housing}$ at 80 gpm. In this case, $\Delta P_{housing}$ is 1.5 psi (.10 bar) on the graph for the MRT housing.

Use the element pressure curve to determine $\Delta P_{element}$ at 80 gpm. In this case, $\Delta P_{element}$ is 2.5 psi (.17 bar) according to the graph for the 18LZ10 element.

Because the viscosity in this sample is 160 SUS (34 cSt), we determine the Viscosity Factor (V_f) by dividing the Operating Fluid Viscosity with the Standard Viscosity of 150 SUS (32 cSt). To best determine your Operating Fluid Viscosity, please reference the chart in Appendix D.

Finally, the overall filter pressure differential, ΔP_{filter}, is calculated by adding $\Delta P_{housing}$ with the true element pressure differential, ($\Delta P_{element} * V_f$). The $\Delta P_{element}$ from the graph has to be multiplied by the viscosity factor to get the true pressure differential across the element.

Solution:

$\Delta P_{housing}$ = 1.5 psi [.10 bar] | $\Delta P_{element}$ = 6 psi [.17 bar]

V_f = 160 SUS (34 cSt) / 150 SUS (32 cSt) = 1.1

ΔP_{filter} = 1.5 psi + (2.5 psi * 1.1) = 4.3 psi

OR

ΔP_{filter} = .10 bar + (.17 bar * 1.1) = .29 bar

MRT Medium Pressure In-Tank Filter

Filter Model Number Selection

How to Build a Valid Model Number for a Schroeder MRT:

BOX 1	BOX 2	BOX 3	BOX 4	BOX 5	BOX 6	BOX 7
MRT –	–	–	–	–	–	

Example: NOTE: One option per box

BOX 1	BOX 2	BOX 3	BOX 4	BOX 5	BOX 6	BOX 7	
MRT –	18 –	LZ10 –	–	S24 S24 –	–		= MRT18LZ10S24S24

BOX 1

Filter Series
MRT

BOX 2

Element Length (in)
18

BOX 3

Element Size and Media	
L3	= L size 3 µ E media (cellulose)
L10	= L size 10 µ E media (cellulose)
LZ1	= L size 1 µ Excellement® Z-Media® (synthetic)
LZ3	= L size 3 µ Excellement® Z-Media® (synthetic)
LZ5	= L size 5 µ Excellement® Z-Media® (synthetic)
LZ10	= L size 10 µ Excellement® Z-Media® (synthetic)
LZ25	= L size 25 µ Excellement® Z-Media® (synthetic)
LDZ1	= L size DirtCatcher® 1 µ Excellement® Z-Media®
LDZ3	= L size DirtCatcher® 3 µ Excellement® Z-Media®
LDZ5	= L size DirtCatcher® 5 µ Excellement® Z-Media®
LDZ10	= L size DirtCatcher® 10 µ Excellement® Z-Media®
LDZ25	= L size DirtCatcher® 25 µ Excellement® Z-Media®

BOX 4

Seal Material
Omit = Buna N

BOX 5
Specification of both ports is required

Inlet Porting		
Port A	Port B	Inlet Porting Location
S = S24	S = S24	
N = None	N = None	

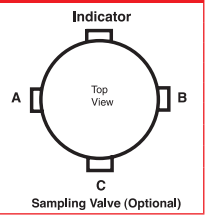

BOX 6

Dirt Alarm® Options		
	Omit =	None
Visual	D5 =	Visual pop-up
Visual with Thermal Lockout	D8 =	Visual w/ thermal lockout
Electrical	MS5 =	Electrical w/ 12 in. 18 gauge 4-conductor cable
	MS5LC =	Low current MS5
	MS10 =	Electrical w/ DIN connector (male end only)
	MS10LC =	Low current MS10
	MS11 =	Electrical w/ 12 ft. 4-conductor wire
	MS12 =	Electrical w/ 5 pin Brad Harrison connector (male end only)
	MS12LC =	Low current MS12
	MS16 =	Electrical w/ weather-packed sealed connector
	MS16LC =	Low current MS16
	MS17LC =	Electrical w/ 4 pin Brad Harrison male connector
Electrical with Thermal Lockout	MS5T =	MS5 (see above) w/ thermal lockout
	MS5LCT =	Low current MS5T
	MS10T =	MS10 (see above) w/ thermal lockout
	MS10LCT =	Low current MS10T
	MS12T =	MS12 (see above) w/ thermal lockout
	MS12LCT =	Low current MS12T
	MS16T =	MS16 (see above) w/ thermal lockout
	MS16LCT =	Low current MS16T
	MS17LCT =	Low current MS17T
Electrical Visual	MS13 =	Supplied w/ threaded connector & light
	MS14 =	Supplied w/ 5 pin Brad Harrison connector & light (male end)
Electrical Visual with Thermal Lockout	MS13DCT =	MS13 (see above), direct current, w/ thermal lockout
	MS13DCLCT =	Low current MS13DCT
	MS14DCT =	MS14 (see above), direct current, w/ thermal lockout
	MS14DCLCT =	Low current MS14DC

BOX 7

Options	
Omit =	No sampling valve
SV =	Up stream sampling valve

NOTES:

Box 2. Replacement element part numbers are a combination of Boxes 2, 3, and 4. Example: 18L3

Accessories for Tank-Mounted Filters

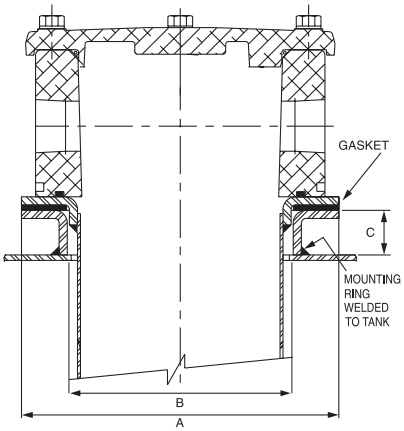

Mounting Ring for ST, ZT, RT, RTI and LRT Models

The mounting ring is welded directly to the hydraulic reservoir. The filter is then mounted to the mounting ring with bolts converting the filter to a "weld in" design. The mounting ring eliminates the need to drill and tap the hydraulic reservoir.

Model Number	Part Number	A	B	C
ST, RT, RTI, LRT	A-LFT-813	7.00 (178)	5.00 (127)	1.00 (25)
ST, RT, RTI, LRT High Version	A-LFT-1448	7.00 (178)	5.00 (127)	1.50 (38)
ZT	A-LFT-1295	6.25 (159)	3.62 (92)	.88 (22)

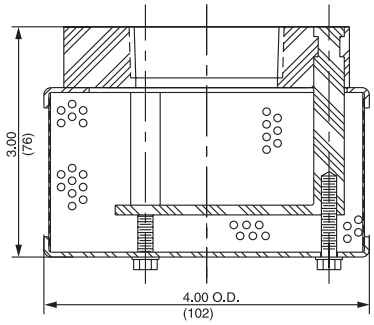

Diffuser for KFT, RT and LRT Models

The diffuser option (designated as D for outlet porting option in model number) is threaded to the bushing on the filter bowl below the outlet opening to help decrease turbulent flow in the hydraulic reservoir.

No other outlet port options are available if the diffuser is used.

Model Number	Part Number	NPTF
RT, KFT	A-LFT-1506	1½"
LRT	A-LFT-1507	2"

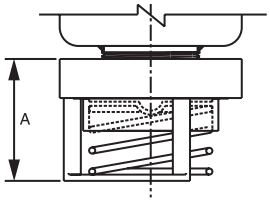

Check Valve for ST, KFT, RT, LRT and BFT Models

The check valve option (designated as C for outlet porting option in model number) makes it possible to service the filter without draining the oil from the reservoir when the filter is mounted below the oil level. It also prevents reservoir siphoning when system components are serviced.

The check valve can also be used on other reservoir return flow lines, where components upstream of the check valve can be serviced without the loss of reservoir oil. The spring setting is .75-1.00 psi cracking. Order by part number shown in chart.

No other outlet port options are available if the check valve is used.

Model Number	Part Number	NPTF	A
ST, KFT, RT	A-LFT-158Q-1	1½"	2.34 (59)
LRT	A-LFT-880	2"	2.34 (59)
BFT	A-BFT-103	3"	4.50 (114)

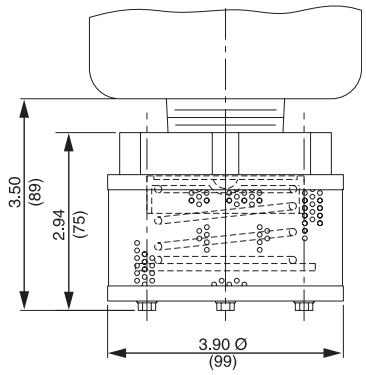

Check Valve Diffuser Combination for KFT and RT Models

The diffuser/check valve option (designated as CD for outlet porting option in model number) is threaded on to the outlet port and combines the advantages of both separate options in one assembly.

Available as a separate item with 1½" NPT female threads, order part number A-LFT-1208.

No other outlet port options are available if the check valve/ diffuser is used.

Accessories for Tank-Mounted Filters

Tube Adapter Outlet Port for KFT, RT, LRT and BFT Models

The tube adapter outlet port option (designated as T for outlet porting option in model number) provides the means to direct flow to the bottom of the hydraulic reservoir. Other tube lengths are available for quantity purchases. Contact your Schroeder distributor for details.

Model Number	Dimension A (O.D.) in. (mm)
RT	1.62 (41)
LRT	2.25 (57)
BFT	3.50 (89)

Note: No other outlet port options are available if the tube adapter is used.

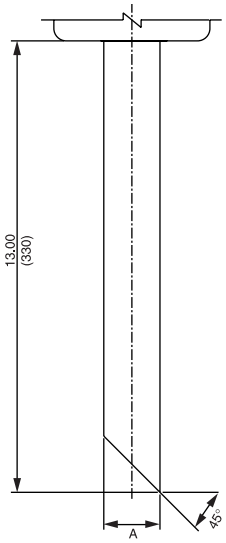

Threaded Outlet Port for ZT, KFT, RT, LRT and BFT Models

The threaded male outlet port is standard on the KFT, RT, LRT and BFT models, and is available as an option on the ZT filter by designating OP for the outlet porting options in the model number.

- RT is furnished with 1½" NPT Male (standard)
- LRT is furnished with 2" NPT Male (standard)
- KFT is furnished with 1 1/2" NPT Male (standard)
- BFT is furnished with 3" NPT Male (standard)
- ZT is furnished with 1½" NPT Male (optional)

Spin-On Filter PAF1

Model No. of filter in photograph is PAF16PZ10SY2.

Features and Benefits

- Spin-On with full ported die cast aluminum head for minimal pressure drop
- Offered in pipe and SAE straight thread porting
- Spin-On thread = 1.00-12UNF-2B
- Visual gauge or electrical switch dirt alarms
- Small profile for use in limited space
- Same day shipment model available

20 gpm
75 L/min
100 psi
7 bar

Filter Housing Specifications

Flow Rating:	Up to 20 gpm (75 L/min) for 150 SUS (32 cSt) fluids
Max. Operating Pressure:	100 psi (7 bar)
Min. Yield Pressure:	150 psi (10 bar), per NFPA T2.6.1
Rated Fatigue Pressure:	Contact factory
Temp. Range:	-20°F to 225°F (-29°C to 107°C)
Bypass Setting:	Cracking: 30 psi (2 bar) Full Flow: 36 psi (2 bar)
Porting Head & Cap: Element Case:	Die Cast Aluminum Steel
Weight of PAF1-6P:	1.8 lbs. (0.8 kg)
Element Change Clearance:	2.50" (65 mm)

Fluid Compatibility

Type Fluid	Appropriate Schroeder Media
Petroleum Based Fluids	All E media (cellulose) and Z-Media® (synthetic)
High Water Content	3 and 10 µ Z-Media® (synthetic)
Invert Emulsions	10 µ Z-Media® (synthetic)
Water Glycols	3 and 10 µ Z-Media® (synthetic)

Spin-On Filter

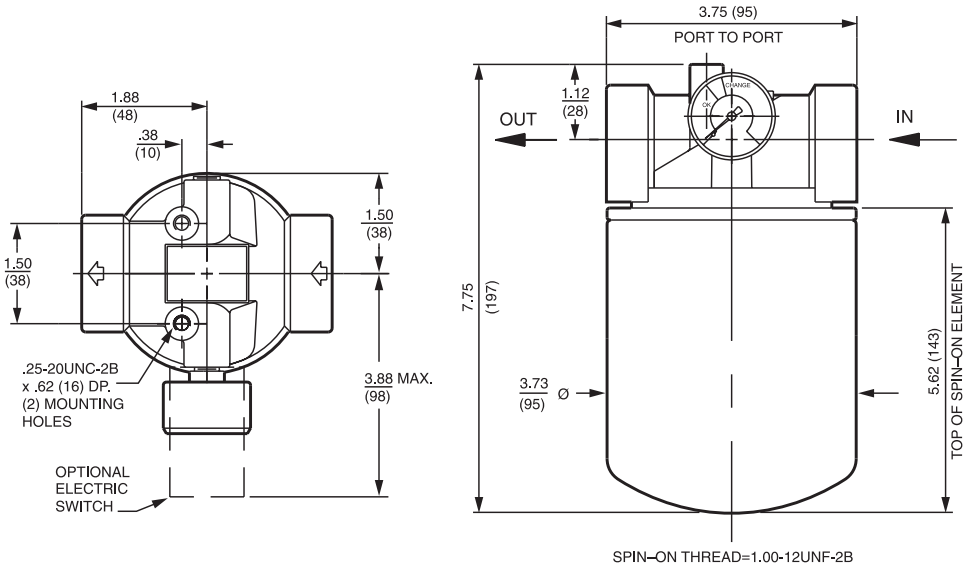

Installation instructions included on element.

Metric dimensions in ( ).

Element Performance Information & Dirt Holding Capacity

Element	Filtration Ratio Per ISO 4572/NFPA T3.10.8.8 Using automated particle counter (APC) calibrated per ISO 4402			Filtration Ratio per ISO 16889 Using APC calibrated per ISO 11171	
	$ß_x \geq 75$	$ß_x \geq 100$	$ß_x \geq 200$	$ß_x(c) \geq 200$	$ß_x(c) \geq 1000$
P10	15.5	16.2	18.0	N/A	N/A
PZ10	7.4	8.2	10.0	8.0	10.0
PZ25	18.0	20.0	22.5	19.0	24.0

Element	DHC (gm)	Element	DHC (gm)
P10	37		
PZ10	16.8	PZ25	23.0

Element Collapse Rating: 100 psid (7 bar)

Flow Direction: Outside In

Element Nominal Dimensions: 3.75" (95 mm) O.D. x 5.5" (140 mm) long

Pressure Drop Information

Based on Flow Rate and Viscosity

$\Delta P_{housing}$

PAF1 $\Delta P_{housing}$ for fluids with sp gr (specific gravity) = 0.86:

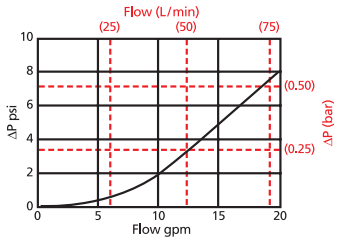

$\Delta P_{element}$

PZ

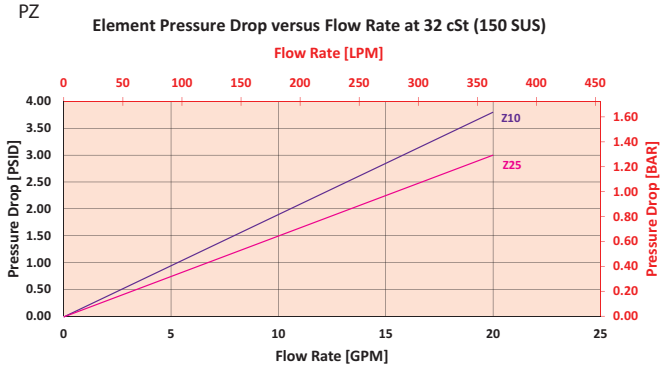

$$\Delta P_{filter} = \Delta P_{housing} + (\Delta P_{element} * V_f)$$

Exercise:

Determine ΔP_{filter} at 10 gpm (37.9 L/min) for PAF16PZ25PY2 using 160 SUS (34 cSt) fluid.

Use the housing pressure curve to determine $\Delta P_{housing}$ at 10 gpm. In this case, $\Delta P_{housing}$ is 2 psi (.14 bar) on the graph for the PAF1 housing.

Use the element pressure curve to determine $\Delta P_{element}$ at 10 gpm. In this case, $\Delta P_{element}$ is 1.5 psi (.10 bar) according to the graph for the PZ25 element.

Because the viscosity in this sample is 160 SUS (34 cSt), we determine the Viscosity Factor (V_f) by dividing the Operating Fluid Viscosity with the Standard Viscosity of 150 SUS (32 cSt). To best determine your Operating Fluid Viscosity, please reference the chart in Appendix D.

Finally, the overall filter pressure differential, ΔP_{filter}, is calculated by adding $\Delta P_{housing}$ with the true element pressure differential, ($\Delta P_{element}$*V_f). The $\Delta P_{element}$ from the graph has to be multiplied by the viscosity factor to get the true pressure differential across the element.

Solution:

$\Delta P_{housing}$ = 2 psi [.14 bar] | $\Delta P_{element}$ = 1.5 psi [.10 bar]

V_f = 160 SUS (34 cSt) / 150 SUS (32 cSt) = 1.1

ΔP_{filter} = 2 psi + (1.5 psi * 1.1) = 3.7 psi

OR

ΔP_{filter} = 14 bar + (.10 bar * 1.1) = .25 bar

Note:
If your element is not graphed, use the following equation:
$\Delta P_{element}$ = Flow Rate x $\Delta P_{f.}$ Plug this variable into the overall pressure drop equation.

Ele.	ΔP
P10	0.17

PAF1 Spin-On Filter

Filter Model Number Selection

Highlighted product eligible for QuickDelivery

How to Build a Valid Model Number for a Schroeder PAF1:

BOX 1		BOX 2		BOX 3		BOX 4		BOX 5		BOX 6
PAF1	–		–		–		–		–	

Example: NOTE: One option per box

BOX 1		BOX 2		BOX 3		BOX 4		BOX 5		BOX 6	
PAF1	–	6	–	P10	–		–	P	–	Y2	= PAF16P10PY2

BOX 1

Filter Series
PAF1

BOX 2

Element Length (in)
6

BOX 3

Element Size and Media
P10 = P size 10 µ E media (cellulose)
PZ10 = P size 10 µ Excellement® Z-Media® (synthetic)
PZ25 = P size 25 µ Excellement® Z-Media® (synthetic)

BOX 4

Seal Material
Omit = Buna N

BOX 5

Inlet Porting
P = ¾" NPTF
S = SAE-12

BOX 6

Dirt Alarm® Options		
	Omit =	None
Visual	Y2 =	Back-mounted tri-color gauge
Electrical	ES =	Electric switch

NOTE:

Box 2. Replacement element part numbers are a combination of Boxes 3 and 4. Example: P10

50 gpm
190 L/min
100 psi
7 bar

Model No. of filter in photograph is MAF17M10S.

Features and Benefits

- Spin-On with full ported die cast aluminum head for minimal pressure drop
- Offered in pipe, SAE straight thread and ISO 228 porting
- Spin-On thread = 1.50-16UN-2B
- Visual gauge or electrical switch dirt alarms
- Small profile for use in limited space
- Available in 7" and 10" element lengths
- Available with NPTF inlet and outlet female test ports

Filter Housing Specifications

Flow Rating:	Up to 50 gpm (190 L/min) for 150 SUS (32 cSt) fluids
Max. Operating Pressure:	100 psi (7 bar)
Min. Yield Pressure:	200 psi (10 bar), per NFPA T2.6.1
Rated Fatigue Pressure:	Contact factory
Temp. Range:	-20°F to 225°F (-29°C to 107°C)
Bypass Setting:	Cracking: 30 psi (2 bar) Full Flow: 48 psi (3 bar)
Porting Head & Cap: Element Case:	Die Cast Aluminum Steel
Weight of MAF1-7M: Weight of MAF1-10M:	4.2 lbs. (1.9 kg) 5.0 lbs. (2.3 kg)
Element Change Clearance:	2.50" (65 mm)

Fluid Compatibility

Type Fluid	Appropriate Schroeder Media
Petroleum Based Fluids	All E media (cellulose) and Z-Media® (synthetic)
High Water Content	3 and 10 µ Z-Media® (synthetic)
Invert Emulsions	10 µ Z-Media® (synthetic)
Water Glycols	3 and 10 µ Z-Media® (synthetic)

MAF1 Spin-On Filter

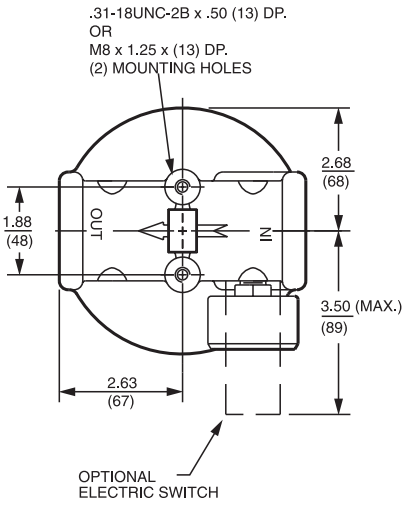

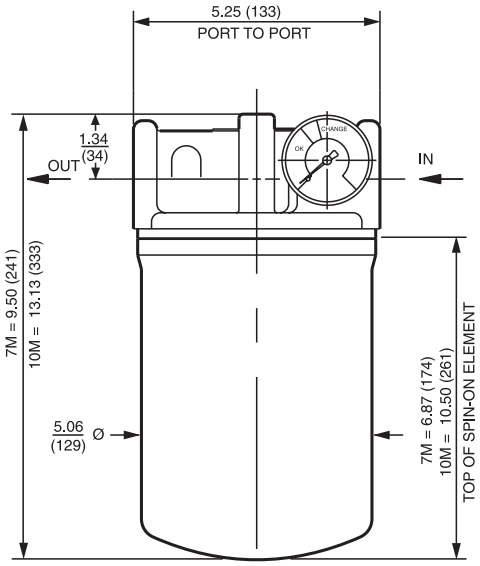

Installation instructions included on element.

Metric dimensions in ( ).

Element Performance Information & Dirt Holding Capacity

	Filtration Ratio Per ISO 4572/NFPA T3.10.8.8 Using automated particle counter (APC) calibrated per ISO 4402			Filtration Ratio per ISO 16889 Using APC calibrated per ISO 11171	
Element	$ß_x \geq 75$	$ß_x \geq 100$	$ß_x \geq 200$	$ß_x(c) \geq 200$	$ß_x(c) \geq 1000$
7MZ3/10MZ3	<1.0	<1.0	<2.0	<4.0	4.8
7MZ10/10MZ10	7.4	8.2	10.0	8.0	10.0
10MZW10	N/A	N/A	N/A	6.9	8.6

Element	DHC (gm)	Element	DHC (gm)
7MZ3	105		
7MZ10	104	10MZW10	53

Element Collapse Rating: 100 psid (7 bar)

Flow Direction: Outside In

Element Nominal Dimensions: 7M: 5.0" (125 mm) O.D. x 7.0" (180 mm) long
10M: 5.0" (125 mm) O.D. x 10.5" (261 mm) long

Pressure Drop Information

Based on Flow Rate and Viscosity

$\Delta P_{housing}$

MAF1 $\Delta P_{housing}$ for fluids with sp gr (specific gravity) = 0.86:

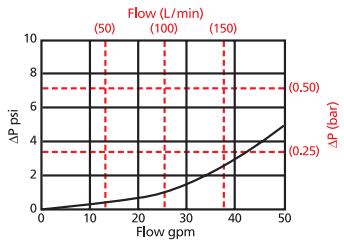

$\Delta P_{element}$

7MZ

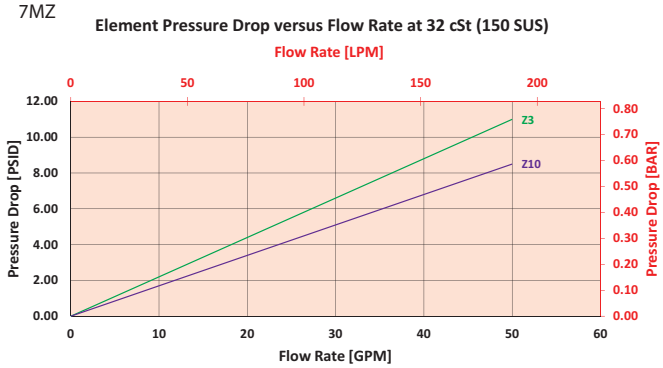

10MZ

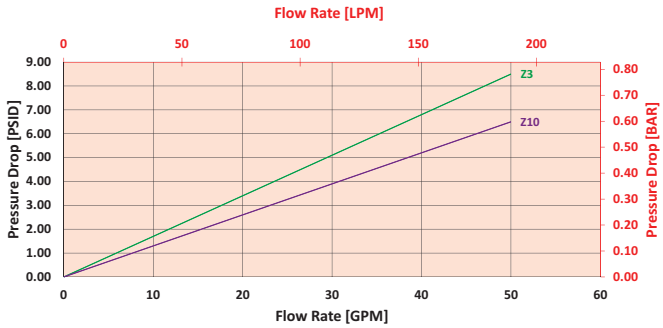

$$\Delta P_{filter} = \Delta P_{housing} + (\Delta P_{element} * V_f)$$

Exercise:

Determine ΔP_{filter} at 40 gpm (151.6 L/min) for MAF17MZ10PY2 using 160 SUS (34 cSt) fluid.

Use the housing pressure curve to determine $\Delta P_{housing}$ at 40 gpm. In this case, $\Delta P_{housing}$ is 3 psi (.21 bar) on the graph for the MAF1 housing.

Use the element pressure curve to determine $\Delta P_{element}$ at 40 gpm. In this case, $\Delta P_{element}$ is 7 psi (.48 bar) according to the graph for the 7MZ10 element.

Because the viscosity in this sample is 160 SUS (34 cSt), we determine the Viscosity Factor (V_f) by dividing the Operating Fluid Viscosity with the Standard Viscosity of 150 SUS (32 cSt). To best determine your Operating Fluid Viscosity, please reference the chart in Appendix D.

Finally, the overall filter pressure differential, ΔP_{filter}, is calculated by adding $\Delta P_{housing}$ with the true element pressure differential, ($\Delta P_{element}$*V_f). The $\Delta P_{element}$ from the graph has to be multiplied by the viscosity factor to get the true pressure differential across the element.

Solution:

$\Delta P_{housing}$ = 3 psi [.21 bar] | $\Delta P_{element}$ = 7 psi [.48 bar]

V_f = 160 SUS (34 cSt) / 150 SUS (32 cSt) = 1.1

ΔP_{filter} = 3 psi + (7 psi * 1.1) = 10.7 psi

OR

ΔP_{filter} = .21 bar + (.48 bar * 1.1) = .74 bar

Note:
If your element is not graphed, use the following equation:
$\Delta P_{element}$ = Flow Rate x $\Delta P_{f.}$ Plug this variable into the overall pressure drop equation.

Ele.	ΔP
7M3	0.23
7M10	0.14

MAF1 Spin-On Filter

Filter Model Number Selection

How to Build a Valid Model Number for a Schroeder MAF1:

BOX 1		BOX 2		BOX 3		BOX 4		BOX 5		BOX 6		BOX 7
MAF1	–		–		–		–		–		–	

Example: NOTE: One option per box

BOX 1		BOX 2		BOX 3		BOX 4		BOX 5		BOX 6		BOX 7	
MAF1	–	7	–	M3	–		–	P	–	Y2	–		= MAF17M3PY2

BOX 1

Filter Series
MAF1

BOX 2

Element Length (in)
7
10

BOX 3

Element Size and Media
M3 = M size 3 µ E media (cellulose)
M10 = M size 10 µ E media (cellulose)
MZ3 = M size 3 µ Excellement® Z-Media® (synthetic)
MZ10 = M size 10 µ Excellement® Z-Media® (synthetic)
MZW10 = M size 10 µ Aqua-Excellement™ ZW media
MW = M size W media (water removal)

BOX 4

Seal Material
Omit = Buna N
V = Viton®

BOX 5

Porting Options
P = 1¼" NPTF
S = SAE-20
B = ISO 228 G-1¼"

BOX 6

Dirt Alarm® Options	
	Omit = None
Visual	Y2 = Back-mounted tri-color gauge
Electrical	ES = Electric switch

BOX 7

Additional Options
Omit = None
L = Two ⅛" NPTF inlet and outlet female test ports

NOTES:

Box 2. Replacement element part numbers are a combination of Boxes 2, 3, and 4. Replacement element part numbers for 7" length begin with M. Replacement element part numbers for 10" length begin with 10M. Examples: M3V; 10MZ3V 10" only available with MZ3 and MZ10.

Box 3. ZW media only available for 10" element.

Box 4. For option V, all aluminum parts are anodized. Viton® is a registered trademark of DuPont Dow Elastomers.

Box 5. B porting option supplied with metric mounting holes.

Model No. of filter in photograph is MF27M10SD5.

Features and Benefits

- Spin-On with full ported cast iron head for minimal pressure drop
- Offered in pipe, SAE straight thread and ISO 228 porting
- Spin-On thread = 1.50-16UN-2B
- Various Dirt Alarm® options
- Available in 7" and 10" element lengths

60 gpm
230 L/min
150 psi
10 bar

Filter Housing Specifications

Flow Rating:	Up to 60 gpm (230 L/min) for 150 SUS (32 cSt) fluids
Max. Operating Pressure:	150 psi (10 bar)
Min. Yield Pressure:	250 psi (17 bar), per NFPA T2.6.1
Rated Fatigue Pressure:	Contact factory
Temp. Range:	-20°F to 225°F (-29°C to 107°C)
Bypass Setting:	Cracking: 30 psi (2 bar) Full Flow: 48 psi (3 bar)
Porting Head: Element Case:	Cast Iron Steel
Weight of MF2-7M:	8.6 lbs. (3.9 kg)
Element Change Clearance:	1.50" (40 mm)

Fluid Compatibility

Type Fluid	Appropriate Schroeder Media
Petroleum Based Fluids	All E media (cellulose) and Z-Media® (synthetic)
High Water Content	3 and 10 µ Z-Media® (synthetic)
Invert Emulsions	10 µ Z-Media® (synthetic)
Water Glycols	3 and 10 µ Z-Media® (synthetic)

Spin-On Filter

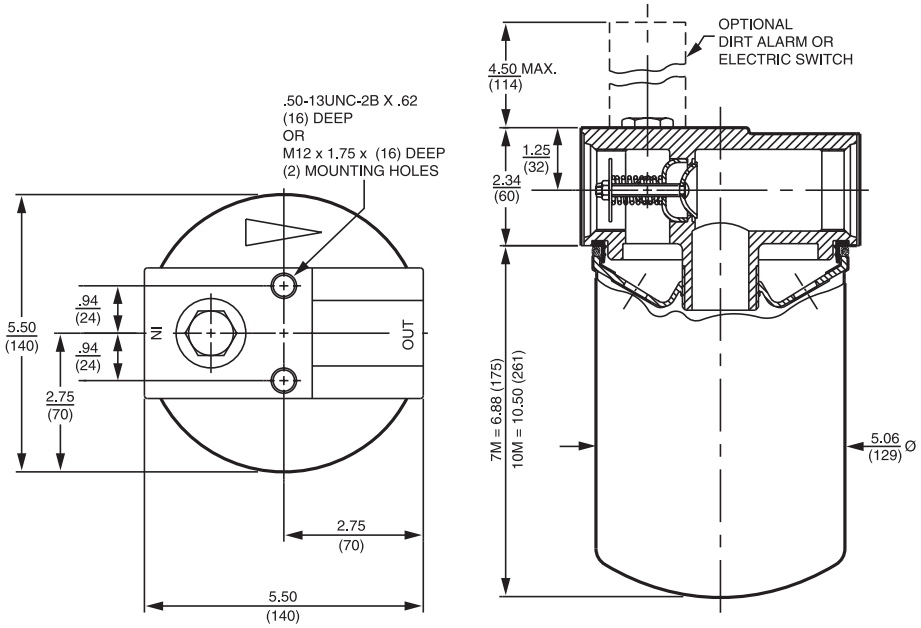

SPIN-ON THREAD=1.50-16UN-2B

Installation instructions included on element.

Metric dimensions in ( ).

Element Performance Information & Dirt Holding Capacity

Element	Filtration Ratio Per ISO 4572/NFPA T3.10.8.8 Using automated particle counter (APC) calibrated per ISO 4402			Filtration Ratio per ISO 16889 Using APC calibrated per ISO 11171	
	$ß_x \geq 75$	$ß_x \geq 100$	$ß_x \geq 200$	$ß_x^{(c)} \geq 200$	$ß_x^{(c)} \geq 1000$
7MZ3/10MZ3	<1.0	<1.0	<2.0	<4.0	4.8
7MZ10/10MZ10	7.4	8.2	10.0	8.0	10.0
10MZW10	N/A	N/A	N/A	6.9	8.6

Element	DHC (gm)	Element	DHC (gm)
7MZ3	105		
7MZ10	104	10MZW10	53

Element Collapse Rating:	100 psid (7 bar)
Flow Direction:	Outside In
Element Nominal Dimensions:	7M: 5.0" (125 mm) O.D. x 7.0" (180 mm) long
	10M: 5.0" (125 mm) O.D. x 10.5" (261 mm) long

Pressure Drop Information

Based on Flow Rate and Viscosity

$\Delta P_{housing}$

MF2 $\Delta P_{housing}$ for fluids with sp gr (specific gravity) = 0.86:

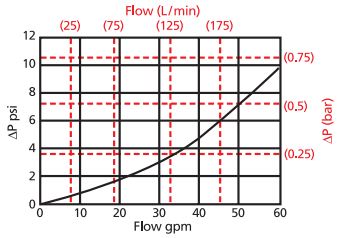

$\Delta P_{element}$

7MZ

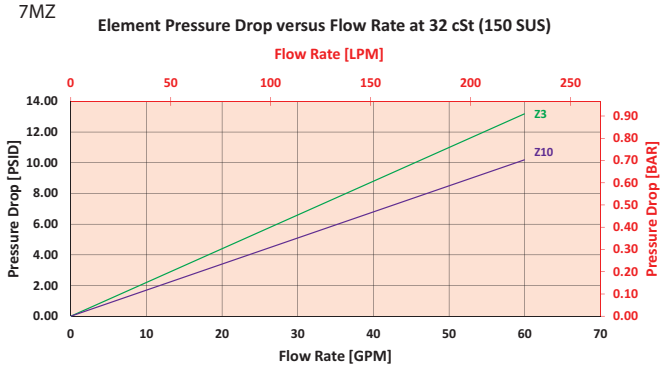

$$\Delta P_{filter} = \Delta P_{housing} + (\Delta P_{element} * V_f)$$

Exercise:

Determine ΔP_{filter} at 40 gpm (151.6 L/min) for MF27MZ10PD5 using 160 SUS (34 cSt) fluid.

Use the housing pressure curve to determine $\Delta P_{housing}$ at 40 gpm. In this case, $\Delta P_{housing}$ is 5 psi (.34 bar) on the graph for the MF2 housing.

Use the element pressure curve to determine $\Delta P_{element}$ at 40 gpm. In this case, $\Delta P_{element}$ is 7 psi (.48 bar) according to the graph for the 7MZ10 element.

Because the viscosity in this sample is 160 SUS (34 cSt), we determine the Viscosity Factor (V_f) by dividing the Operating Fluid Viscosity with the Standard Viscosity of 150 SUS (32 cSt). To best determine your Operating Fluid Viscosity, please reference the chart in Appendix D.

Finally, the overall filter pressure differential, ΔP_{filter}, is calculated by adding $\Delta P_{housing}$ with the true element pressure differential, ($\Delta P_{element}$*V_f). The $\Delta P_{element}$ from the graph has to be multiplied by the viscosity factor to get the true pressure differential across the element.

Solution:

$\Delta P_{housing}$ = 5 psi [.34 bar] | $\Delta P_{element}$ = 7 psi [.48 bar]

V_f = 160 SUS (34 cSt) / 150 SUS (32 cSt) = 1.1

ΔP_{filter} = 5 psi + (7 psi * 1.1) = 12.7 psi

OR

ΔP_{filter} = .34 bar + (.48 bar * 1.1) = .87 bar

Note:
If your element is not graphed, use the following equation:
$\Delta P_{element}$ = Flow Rate x $\Delta P_{f.}$ Plug this variable into the overall pressure drop equation.

Ele.	ΔP
7M3	0.23
7M10	0.14

MF2 Spin-On Filter

Filter Model Number Selection

How to Build a Valid Model Number for a Schroeder MF2:

BOX 1		BOX 2		BOX 3		BOX 4		BOX 5		BOX 6
MF2	–		–		–		–		–	

Example: Option 1 NOTE: One option per box

BOX 1		BOX 2		BOX 3		BOX 4		BOX 5		BOX 6	
MF2	–	7	–	M3	–		–	P	–	D5	= MF27M3PD5

BOX 1

Filter Series
MF2

BOX 2

Element Length (in)
7
10

BOX 3

Element Size and Media
M3 = M size 3 µ E media (cellulose)
M10 = M size 10 µ E media (cellulose)
MZ3 = M size 3 µ Excellement® Z-Media® (synthetic)
MZ10 = M size 10 µ Excellement® Z-Media® (synthetic)
MZW10 = M size 10 µ Aqua-Excellement™ ZW media
MW = M size W media (water removal)

BOX 4

Seal Material
Omit = Buna N
V = Viton®

BOX 5

Porting Options
P = 1¼" NPTF
S = SAE-20
B = ISO 228 G-1¼"

BOX 6

Dirt Alarm® Options		
	Omit =	None
Visual	D5 =	Visual pop-up
Visual with Thermal Lockout	D8 =	Visual w/ thermal lockout
Electrical	MS5 =	Electrical w/ 12 in. 18 gauge 4-conductor cable
	MS5LC =	Low current MS5
	MS10 =	Electrical w/ DIN connector (male end only)
	MS10LC =	Low current MS10
	MS11 =	Electrical w/ 12 ft. 4-conductor wire
	MS12 =	Electrical w/ 5 pin Brad Harrison connector (male end only)
	MS12LC =	Low current MS12
	MS16 =	Electrical w/ weather-packed sealed connector
	MS16LC =	Low current MS16
	MS17LC =	Electrical w/ 4 pin Brad Harrison male connector
Electrical with Thermal Lockout	MS5T =	MS5 (see above) w/ thermal lockout
	MS5LCT =	Low current MS5T
	MS10T =	MS10 (see above) w/ thermal lockout
	MS10LCT =	Low current MS10T
	MS12T =	MS12 (see above) w/ thermal lockout
	MS12LCT =	Low current MS12T
	MS16T =	MS16 (see above) w/ thermal lockout
	MS16LCT =	Low current MS16T
	MS17LCT =	Low current MS17T
Electrical Visual	MS13 =	Supplied w/ threaded connector & light
	MS14 =	Supplied w/ 5 pin Brad Harrison connector & light (male end)
Electrical Visual with Thermal Lockout	MS13DCT =	MS13 (see above), direct current, w/ thermal lockout
	MS13DCLCT =	Low current MS13DCT
	MS14DCT =	MS14 (see above), direct current, w/ thermal lockout
	MS14DCLCT =	Low current MS14DCT

NOTES:

Box 2. Replacement element part numbers are a combination of Boxes 2, 3, and 4. Replacement element part numbers for 7" length begin with M. Replacement element part numbers for 10" length begin with 10M.
Example: M3; 10MZ3
10" only available with MZ3 and MZ10.

Box 3. ZW media only available for 10" element.

Box 4. Viton® is a registered trademark of DuPont Dow Elastomers.

Box 5. B porting option supplied with metric mounting holes.

Section 6:

SUCTION FILTERS

v.040224

Section 6 Suction Filters Selection Guide

		Pressure psi (bar)	Flow gpm (L/min)	Element Length/Size	Page
Suction Filters	**Tank-Mounted Suction Filter**				
	ST	NA	20 (75)	K, KT	341
	Top-Ported Suction Filter				
	SKF3	300 (20)	25 (95)	KT	345
	In-Line Magnetic Suction Separators				
	TF-SKB	NA	12.5 (47)	SKB	349
	KF3-SKB QUALITY PROTECTION	NA	35 (130)	SKB	350
	Tank-Mounted Magnetic Suction Separator				
	BFT-SKB	NA	75 (285)	SKB	351

Tank-Mounted Suction Filter

ST

Model No. of filter in photograph is ST1K10SY.

Features and Benefits

- Tank-mounted suction filter for hydrostatic suction service
- Optional check valve prevents reservoir siphoning
- Easy Element changeout
- Inlet filter protects pump, reduces start-up failures

20 gpm
75 L/min

Filter Housing Specifications

Flow Rating:	Up to 20 gpm (75 L/min) for 150 SUS (32 cSt) fluids
Max. Operating Pressure:	Suction Filter
Min. Yield Pressure:	Not Applicable
Rated Fatigue Pressure:	Not Applicable
Temp. Range:	-20°F to 225°F (-29°C to 107°C)
Bypass Setting:	Non-bypassing
Porting Head:	Die Cast Aluminum
Cap:	Steel
Element Case:	Steel
Weight of ST-1K:	11.1 lbs. (5.0 kg)
Weight of ST-2K:	14.7 lbs. (6.7 kg)
Element Change Clearance:	7.25" (185 mm) for 1K; 17.50" (445 mm) for KK

Fluid Compatibility

Type Fluid	Appropriate Schroeder Media
Petroleum Based Fluids	All E media (cellulose) and Z-Media® (synthetic)
High Water Content	10 µ Z-Media® (synthetic)
Invert Emulsions	10 µ Z-Media® (synthetic)
Water Glycols	10 µ Z-Media® (synthetic)
Phosphate Esters	10 µ Z-Media® (synthetic) with H (EPR) seal designation and 10 µ E media (cellulose) with H (EPR) seal designation
Skydrol®	10 µ Z-Media (synthetic) with H.5 seal designation (EPR seals and stainless steel wire mesh in element, and light oil coating on housing exterior)

Tank-Mounted Suction Filter

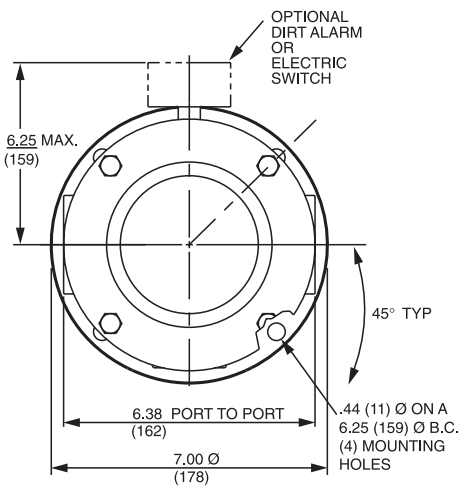

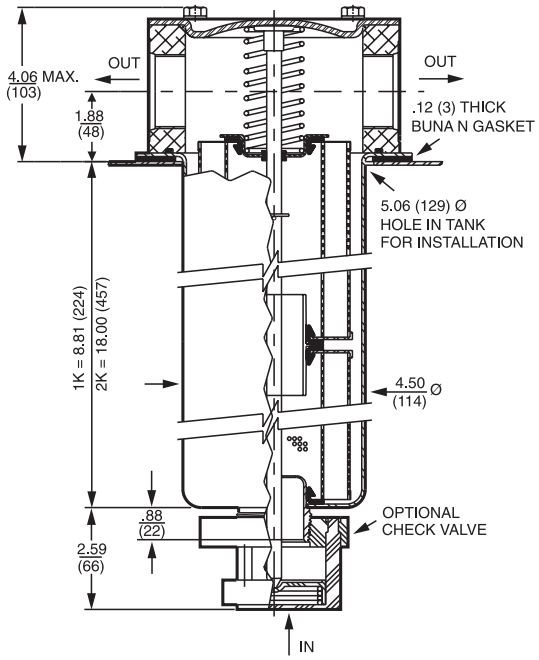

Metric dimensions in ( ).

Element Performance Information & Dirt Holding Capacity

Element	Filtration Ratio Per ISO 4572/NFPA T3.10.8.8 Using automated particle counter (APC) calibrated per ISO 4402			Filtration Ratio per ISO 16889 Using APC calibrated per ISO 11171	
	$ß_x \geq 75$	$ß_x \geq 100$	$ß_x \geq 200$	$ß_x(c) \geq 200$	$ß_x(c) \geq 1000$
KTZ10	7.4	8.0	10.0	8.0	10.0

Element	DHC (gm)
KTZ10	56

Element Collapse Rating: 150 psid (10 bar)

Flow Direction: Inside Out

Element Nominal Dimensions: 3.9" (99 mm) O.D. x 9.0" (230 mm) long

Pressure Drop Information

Based on Flow Rate and Viscosity

$\Delta P_{housing}$

ST $\Delta P_{housing}$ for fluids with sp gr (specific gravity) = 0.86:

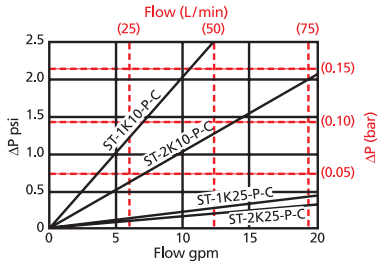

$\Delta P_{element}$

KTZ

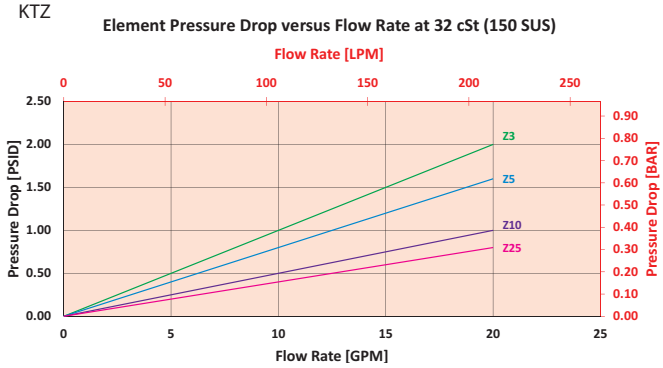

2KTZ

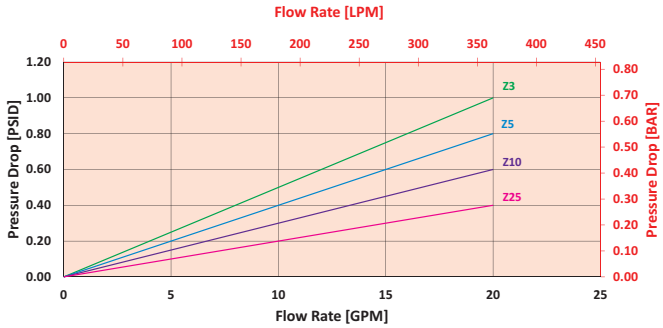

$$\Delta P_{filter} = \Delta P_{housing} + (\Delta P_{element} * V_f)$$

Exercise:

Determine ΔP_{filter} at 15 gpm (57 L/min) for ST1KTZ10PY using 160 SUS (34 cSt) fluid.

Use the element pressure curve to determine $\Delta P_{housing}$ at 15 gpm. In this case, $\Delta P_{housing}$ is 1.5 psi (.10 bar) according to the graph for the ST element.

Use the element pressure curve to determine $\Delta P_{element}$ at 15 gpm. In this case, $\Delta P_{element}$ is .75 psi (.05 bar) according to the graph for the KZT10 element.

Because the viscosity in this sample is 160 SUS (34 cSt), we determine the Viscosity Factor (V_f) by dividing the Operating Fluid Viscosity with the Standard Viscosity of 150 SUS (32 cSt). To best determine your Operating Fluid Viscosity, please reference the chart in Appendix D.

Finally, the overall filter pressure differential, ΔP_{filter}, is calculated by adding $\Delta P_{housing}$ with the true element pressure differential, ($\Delta P_{element} * V_f$). The $\Delta P_{element}$ from the graph has to be multiplied by the viscosity factor to get the true pressure differential across the element.

Solution:

$\Delta P_{housing}$ = 1.5 psi [.75 bar] | $\Delta P_{element}$ = .75 psi [.05 bar]

V_f = 160 SUS (34 cSt) / 150 SUS (32 cSt) = 1.07

ΔP_{filter} = 1.5 psi + (.75 psi * 1.07) = 2.3 psi

OR

ΔP_{filter} = .10 bar + (0.05 bar * 1.07) = 0.15 bar

Note:
If your element is not graphed, use the following equation:
$\Delta P_{element}$ = Flow Rate x ΔP_f. Plug this variable into the overall pressure drop equation.

Ele.	ΔP	Ele.	ΔP	Ele.	ΔP
K3	0.25	KZW25	0.14	2KZW10	0.12
K10	0.09	2K3	0.12	2KZW25	0.07
K25	0.02	2K10	0.05	3K3	0.08
KAS3	0.10	2K25	0.01	3K10	0.03
KAS5	0.08	2KAS3	0.05	3K25	0.01
KAS10	0.05	2KAS5	0.04	3KAS3	0.03
KZX10	0.22	2KAS10	0.03	3KAS5	0.02
KZW1	0.43	2KZX10	0.11	3KAS10	0.02
KZW3	0.32	2KZW1	-	3KZX10	0.07
KZW5	0.28	2KZW3	0.16		
KZW10	0.23	2KZW5	0.14		

Tank-Mounted Suction Filter

Filter Model Number Selection

How to Build a Valid Model Number for a Schroeder ST:

BOX 1		BOX 2		BOX 3		BOX 4		BOX 5		BOX 6		BOX 7		BOX 8
ST	–		–		–		–		–		–		–	

Example: NOTE: Only box 8 may contain more than one option

BOX 1		BOX 2		BOX 3		BOX 4		BOX 5		BOX 6		BOX 7		BOX 8	
ST	–	1	–	K25	–		–	P	–		–	Y	–		= ST1K25PY

BOX 1 – Filter Series

Filter Series
ST

BOX 2 – Number of Elements

Number of Elements
1
2

BOX 3 – Element Part Number

Element Part Number
K10 = K size 10 µ E media (cellulose)
K25 = K size 25 µ E media (cellulose)
KTZ3 = K size 3 µ Excellement® Z-Media® (synthetic) inside-out flow
KTZ5 = K size 5 µ Excellement® Z-Media® (synthetic) inside-out flow
KTZ10 = K size 10 µ Excellement® Z-Media® (synthetic) inside-out flow
KTZ25 = K size 25 µ Excellement® Z-Media® (synthetic) inside-out flow

BOX 4 – Seal Material

Seal Material	
Omit	= Buna N
H	= EPR
W	= Buna N
H.5	= Skydrol® compatibility

BOX 5 – Outlet Port

Outlet Port	
P	= 1½" NPTF
PP	= Dual 1½" NPTF
S	= SAE 24
SS	= Dual SAE 24
B	= ISO 228 G-1½"
BB	= ISO 228 G-1½"

BOX 6 – Optional Check Valve

Optional Check Valve	
Omit =	None
C =	Check Valve

BOX 7 – Dirt Alarm® Options

Visual	Omit	=	None
	Y	=	Vacuum gauge
	YR	=	Vacuum gauge mounted on opposite side of standard location
Electrical	VS	=	Electrical Vacuum Switch
	VSR	=	Electrical Vacuum Switch mounted on opposite side of standard location
	VSR1	=	Heavy-Duty Vacuum Switch

BOX 8 – Additional Options

Additional Options	
Omit =	None
G2293 =	Cork Gasket
G547 =	Two ⅛" gauge ports

NOTES:

Box 3. Replacement element part numbers are identical to contents of Boxes 3 and 4.

Box 4. For options H and W, all aluminum parts are anodized. H.5 seal designation includes the following: EPR seals, stainless steel wire mesh on elements, and light oil coating on housing exterior. Skydrol® is a registered trademark of Solutia Inc.

Box 6. See also "Accessories for Tank-Mounted Filters," page 299.

Top-Ported Suction Filter SKF3

Model No. of filter in photograph is SKF31KTZ25S2.5Y

Features and Benefits

- Top-ported suction filter for hydrostatic suction service
- Easy element changeout
- Inlet filter protects pump, reduces start-up failures
- 2.5 psi suction bypass available

25 gpm
95 L/min
300 psi
20 bar

Filter Housing Specifications

Flow Rating:	Up to 25 gpm (95 L/min) for 150 SUS (32 cSt) fluids
Max. Operating Pressure:	300 psi (20 bar)
Min. Yield Pressure:	1000 psi (70 bar), per NFPA T2.6.1
Rated Fatigue Pressure:	290 psi (20 bar), per NFPA T2.6.1-2005
Temp. Range:	-20°F to 225°F (-29°C to 107°C)
Bypass Setting:	Cracking: 2.5 psi (0.2 bar) Full Flow: Contact Factory
Porting Base:	Die Cast Aluminum
Element Case:	Steel
Weight of SKF3:	10.5 lbs. (4.8 kg)
Element Change Clearance:	1.50" (40 mm) for all lengths

Fluid Compatibility

Type Fluid	Appropriate Schroeder Media
Petroleum Based Fluids	All E-Media (cellulose), Z-Media®
High Water Content	All Z-Media®
Invert Emulsions	10 and 25 µ Z-Media® (synthetic)
Water Glycols	3, 5, 10 and 25 µ Z-Media® (synthetic)
Phosphate Esters	All Z-Media® (synthetic) with H (EPR) seal designation and 3 and 10 µ E-Media (cellulose) with H (EPR) seal designation
Skydrol®	3, 5, 10 and 25 µ Z-Media® (synthetic) with H.5 seal designation

SKF3 Top-Ported Suction Filter

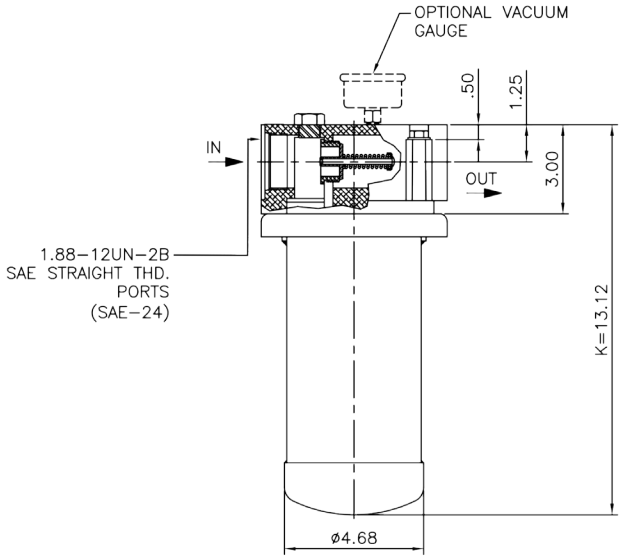

Metric dimensions in ( ).

Element Performance Information & Dirt Holding Capacity

Element	Filtration Ratio Per ISO 4572/NFPA T3.10.8.8 Using automated particle counter (APC) calibrated per ISO 4402			Filtration Ratio per ISO 16889 Using APC calibrated per ISO 11171	
	$ß_x \geq 75$	$ß_x \geq 100$	$ß_x \geq 200$	$ß_x(c) \geq 200$	$ß_x(c) \geq 1000$
KTZ1/GKTZ1	<1.0	<1.0	<1.0	<4.0	4.2
KTZ3/GKTZ3	<1.0	<1.0	<2.0	<4.0	4.8
KTZ5/GKTZ5	2.5	3.0	4.0	4.8	6.3
KTZ10/GKTZ10	7.4	8.2	10.0	8.0	10.0
KTZ25/GKTZ25	18.0	20.0	22.5	19.0	24.0

Dirt Holding Capacity

Element	DHC (gm)
KTZ1/GKTZ1	112
KTZ3/GKTZ3	115
KTZ5/GKTZ5	119
KTZ10/GKTZ10	108
KTZ25/GKTZ25	93

Element Collapse Rating: 150 psid (10 bar) for standard elements

Flow Direction: Inside Out

Element Nominal Dimensions: K: 3.9" (99 mm) O.D. x 9.0" (230 mm) long

$\Delta P_{housing}$

SKF3 $\Delta P_{housing}$ for fluids with sp gr (specific gravity) = 0.86:

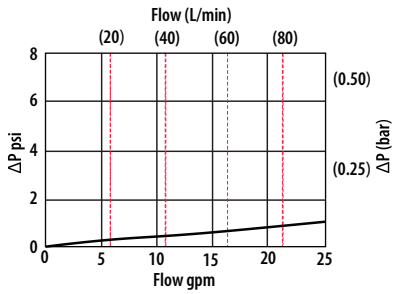

$\Delta P_{element}$

KTZ1

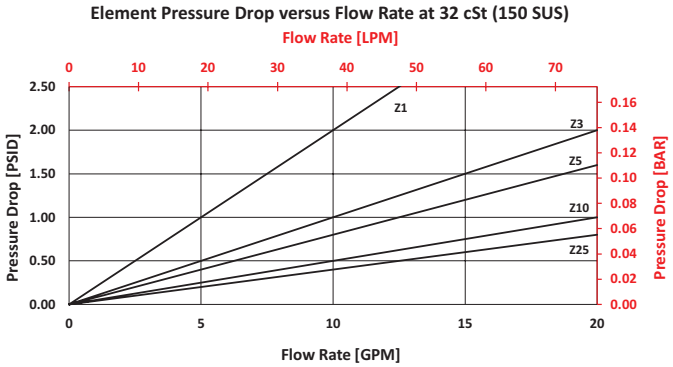

Curves Also Available Upon Request

$$\Delta P_{filter} = \Delta P_{housing} + (\Delta P_{element} * V_f)$$

Exercise:

Determine ΔP_{filter} at 20 gpm (76 L/min) for SKF31KTZ25S2.5Y using 200 SUS (44 cSt) fluid.

Use the housing pressure curve to determine ΔPhousing at 20 gpm. In this case, ΔPhousing is 0.7 psi (.05 bar) on the graph for the SKF3 housing.

Use the element pressure curve to determine ΔPelement at 20 gpm. In this case, ΔPelement is 0.8 psi (.06 bar) according to the graph for the 1KTZ25 element.

Because the viscosity in this sample is 200 SUS (44 cSt), we determine the Viscosity Factor (f) by dividing the Operating Fluid Viscosity with the Standard Viscosity of 150 SUS (32 cSt). To best determine your Operating Fluid Viscosity, please reference the chart in Appendix D.

Finally, the overall filter pressure differential, ΔPfilter , is calculated by adding ΔPhousing with the true element pressure differential, (ΔPelement*Vf). The ΔPelement from the graph has to be multiplied by the viscosity factor to get the true pressure differential across the element.

Solution:

$\Delta P_{housing}$ = 0.7 psi [.21 bar] | $\Delta P_{element}$ = 0.8 psi [.415 bar]

V_f = 200 SUS (42.4 cSt) / 150 SUS (32 cSt) = 1.333

ΔP_{filter} = 0.7 psi + (0.8 psi * 1.333) = 1.8 psi

OR

ΔP_{filter} = .05 bar + (.06 bar * 1.333) = .13 bar

SKF3 Top-Ported Suction Filter

Filter Model Number Selection

How to Build a Valid Model Number for a Schroeder SKF3:

BOX 1	BOX 2	BOX 3	BOX 4	BOX 5	BOX 6	BOX 7	BOX 8
SKF3 –	–	–	–	–	–	–	–

BOX 1	BOX 2	BOX 3	BOX 4	BOX 5	BOX 6	BOX 7	BOX 8	
SKF3 –	1K –	Z –	25 –	–	S –	2.5 –	Y	=SKF31KTZ25S2.5Y

BOX 1

Filter Series
SKF3
GSKF3 (GeoSeal®)

BOX 2

Number & Size of Elements
1KT
GeoSeal®
1KTG

BOX 3

Media Type
Omit = E media (cellulose)
Z = Excellement® Z-Media® (synthetic)
M = M Media (reusable metal)

BOX 4

Micron Rating	
1 = 1µ	(Z-Media)
3 = 3µ	(E, Z-Media)
5 = 5µ	(Z-Media)
10 = 10µ	(E, Z and M-Media)
25 = 25µ	(E, Z and M-Media)
60 = 60µ	(M-Media)
150 = 150µ	(M-Media)

BOX 5

Seal Material
Omit = Buna N
H = EPR
V = Viton®
H.5 = Skydrol® Compatibility
W = Buna N with anodized parts

BOX 6

Magnetic Core
Omit = No Magnetic Core
M = Magnetic Core

BOX 7

Porting
P = 1 1/2" NPTF
S = SAE 24
F = 1½" SAE-4-bolt flange Code 61
B = ISO 228 G-1½"

BOX 8

Bypass		
Omit	=	No Bypass
2.5	=	2.5 psi Suction Bypass

BOX 9

Dirt Alarm® Options			
	Omit	=	None
Visual	Y	=	Vacuum guage
Electrical	VS	=	Electrical Vacuum Switch
	VS1	=	Heavy-Duty Vacuum Switch

NOTES:

Box 2. Replacement element part numbers are a combination of Boxes 2, 3, and 4. Example: KTZ25

Box 5. For options H, W, V, and H.5, all aluminum parts are anodized. H.5 seal designation includes the following: EPR seals, stainless steel wire mesh on elements, and light oil coating on housing exterior. Viton® is a registered trademark of DuPont Dow Elastomers. Skydrol® is a registered trademark of Solutia Inc.

Box 7. For option F, bolt thread depth .63" (16 mm). B porting option supplied with metric mounting holes.

Features and Benefits

- Protects components downstream by capturing potentially harmful ferrous particles

Specifications

Flow Rating:	12.5 gpm (47 L/min)
Element Replacement Part Number:	SKB-1
Element Change Clearance:	2.5" (65 mm)
Weight of TF-SKB:	5.8 lbs (2.6 kg)

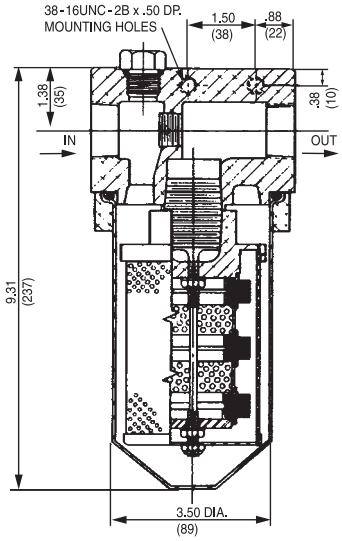

Metric dimensions in ( ).

Filter Model Number Selection

How to Build a Valid Model Number for a Schroeder TF-SKB:

BOX 1		BOX 2		BOX 3		BOX 4
TF-SKB	–		–		–	

Example: NOTE: One option per box

BOX 1		BOX 2		BOX 3		BOX 4	
TF-SKB	–		–	P	–	Y	= TF-SKBPY

BOX 1	BOX 2	BOX 3	BOX 4
Filter Series	Seal Material	Porting	Dirt Alarm® Options
TF-SKB	Omit = Buna N	P = 1" NPTF	Omit = None Visual Y = Vacuum gauge Electrical VS = Electrical Vacuum Switch VS1 = Heavy-Duty Vacuum Switch

NOTE:
Box 1. Element replacement part number: SKB-1.

KF3-SKB In-Line Magnetic Suction Separators

Features and Benefits

- Protects components downstream by capturing potentially harmful ferrous particles

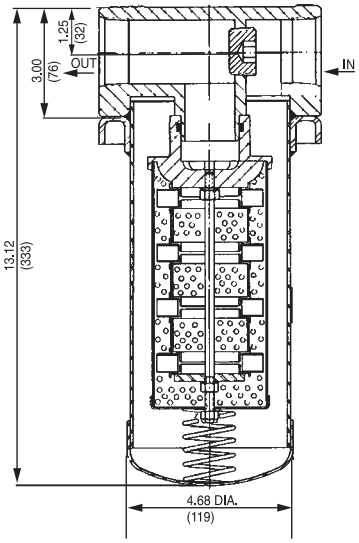

Specifications

Flow Rating:	35 gpm (130 L/min)
Element Replacement Part Number:	A-LF-1789
Element Change Clearance:	1.5" (40 mm)
Weight of KF3-SKB:	11.5 lbs (5.2 kg)

Metric dimensions in ( ).

Filter Model Number Selection

How to Build a Valid Model Number for a Schroeder KF3-SKB:

BOX 1		BOX 2		BOX 3		BOX 4
KF3-SKB	–		–		–	

Example: NOTE: One option per box

BOX 1		BOX 2		BOX 3		BOX 4	
KF3-SKB	–		–	P	–	Y	= KF3-SKBPY

BOX 1 — Filter Series

KF3-SKB

BOX 2 — Seal Material

Omit = Buna N

BOX 3 — Porting

P = 1½" NPTF

BOX 4 — Dirt Alarm® Options

	Omit	=	None
Visual	Y	=	Vacuum gauge
Electrical	VS	=	Electrical Vacuum Switch
	VS1	=	Heavy-Duty Vacuum Switch

NOTE:

Box 1. Element replacement part number: A-LF-1789.

Tank-Mounted Magnetic Suction Seperators

BFT-SKB

Features and Benefits

- Protects components downstream by capturing potentially harmful ferrous particles

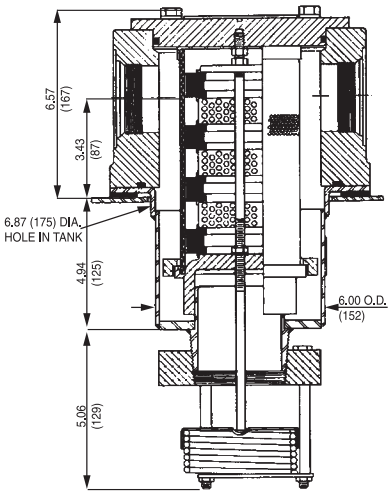

Metric dimensions in ( ).

Specifications

Flow Rating:	75 gpm (285 L/min)
Element Replacement Part Number:	with check valve: A-SKB-3-76 without check valve: SKB-3
Element Change Clearance:	13.5" (345 mm)
Weight of BFT-SKB:	32.0 lbs (14.5 kg)

Filter Model Number Selection

How to Build a Valid Model Number for a Schroeder BFT-SKB::

BOX 1		BOX 2		BOX 3		BOX 4		BOX 5
BFT-SKB	–		–		–		–	

Example: NOTE: One option per box

BOX 1		BOX 2		BOX 3		BOX 4		BOX 5	
BFT-SKB	–		–	P	–		–	Y	= BFT-SKBPY

BOX 1

Filter Series
BFT-SKB

BOX 2

Seal Material
Omit = Buna N

BOX 3

Porting
P = 2½" NPTF
PP = Dual 2½" NPTF
F = 2½" SAE 4-bolt flange Code 61
FF = Dual 2½" SAE 4-bolt flange Code 61

Box 4

Other Options
Omit = None
C = Check Valve

BOX 5

	Dirt Alarm® Options
	Omit = None
Visual	Y = Vacuum gauge
	YR = Vacuum gauge mounted on opposite side of standard location
Electrical	VS = Electrical Vacuum Switch
	VSR = Electrical Vacuum Switch on opposite side of standard location
	VS1 = Heavy-Duty Vacuum Switch

NOTE:

Box 1. See specifications on previous page for element replacement part numbers.

Magnet Inserts for Filters

Magnet Inserts for Filters

K9, 2K9/3K9, MKF50, MKC50, KF5, IRF, KL3, KF30, KF50, KC50, KC65 and TF50 are available with magnet inserts to trap ferrous material that passes through the filter element.

These inserts are removed with the element each time service is performed and cleaned before being reinserted with new elements.

Replacements are available by ordering parts:

	Single Element	Double Element	Triple Element
K9, 2K9/3K9, MKF50, MKC50, KF5, IRF, KL3, KF30, KF50, KC50, KC65, KF3, LF1, MLF1	A-LF-1592	A-LF-1593	A-LF-1594
TF50	A-TF-301-1	A-TF-302-1	

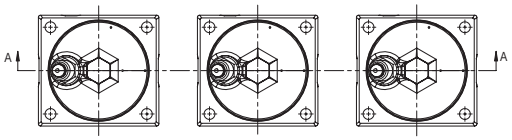

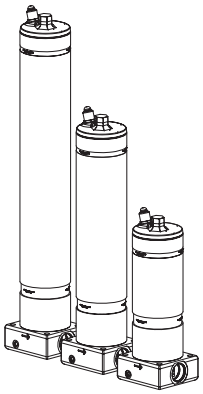

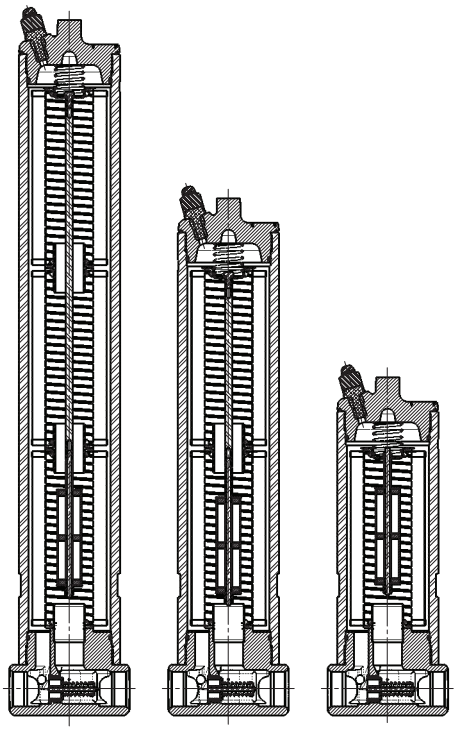

Visual

Visual indicators provide an economical way to know at a glance when a filter element needs to be replaced. A variety of styles are available, ranging from gauges to mechanical pointers and pop-up cartridges.

Schroeder pointers use a tricolor disk to indicate the element condition. The pointer will reach the red section just before bypassing occurs.

In the case of a mechanical magnetic cartridge, a highly visible orange disk springs, or "pops up", at the pre-defined setting. Once activated, the orange signal continues to indicate a bypass or clogged condition, even following equipment shutdown, until it is manually reset. The pop-up indicator is interchangeable with other cartridge style indicators (electrical and electrical visual) available from Schroeder. A high pressure (>6000 psi working pressure) of the pop-up indicator is available and is noted below.

D—Tricolor Pointer Dirt Alarm®
P/N 7619323 for plastic pointer only.
For internal linkage and name plate, contact factory.

D5—Red Pop Up Visual Indicator

D5S*—D5 with Protective Shroud
*To order Protective Shroud only, use SAP #7642053

D5C—Same as D5 but mounted in cap

D5R—Same as D5 but mounted on opposite side of standard location

D9—Stainless Steel version of D5

D9C—Stainless Steel version of D5 mounted in cap

Y—Vacuum Gauge mounted in porting head
P/N 7631068

YR—Same as Y but mounted on opposite side of standard location P/N 7631068

Y2—Back mounted ⅛" NPT Tricolor Glycerin-filled Gauge (0-60 psi) P/N 7627463 (0-100 psi) P/N 7631048

Y2R—Same as Y2 but mounted on opposite side of standard location P/N 7627463

Y2C—Bottom mounted ⅛" NPT Tricolor Gauge (0-60 psi) located in cap P/N 7626647

Y5—Same as Y2 but located in cap P/N 7627463

LF-4209 (G2213): 0 - 30 psid; P/N 7626589

DPG—Standard Differential Pressure Gauge
P/N 7628635 or 7626554

Visual with Thermal Lockout

The thermal lockout feature prevents activation of the indicator below temperatures of 90°F (32°C). This is a welcome feature in mobile applications where fluid temperatures may be well below 90°F at equipment start-up, and will prevent the indicator from showing a premature need to change the element.

D8—Orange Pop Up Visual Indicator with Thermal Lock-out

D8C—Same as D8 but mounted in cap

D8R—Same as D8 but mounted on opposite side of standard location

Appendix A Filter Dirt Alarm® Selection

Electrical Visual

In addition to providing an electrical signal to provide a desired action, Schroeder electrical visual indicators also provide a visual indication of when an element needs to be changed. In the case of the MS and MS2 switches, the visual indicator is a color-coded disk, whereas the MS13 and MS14 dirt alarms provide a light.

MS—Cam operated electrical switch P/N 7627458 for switch only.
For cam, color-coded disk, and mounting bracket, order P/N 7604908.
For internal linkage, contact factory.

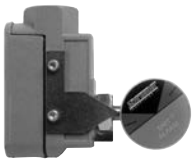

Code	Type of Contact	Electrical Rating	Connection
MS	SPDT	15 Amps @ 125/250 vac, 0.5 Amp @ 125 VDC	½" conduit, female

Electrical

The electrical indicators (MS Series) provide an electrical signal for activating various electric alarm systems or complete machine shutdown. These cartridge-style indicators are available on most Schroeder pressure, return line, and medium pressure filters and can be used for working pressures up to 6000 psi (415 bar) and cyclic conditions up to 4000 psi (276 bar).

- The design is modular; all electrical indicators consist of an MS10 indicator with the corresponding mating connector added to convert the MS10 to a MS5, MS11 etc.
- The standard micro switch for high current indicators is good for both AC and DC use. A separate micro switch with "gold" contacts is used for low current applications. This means that specification of AC or DC is no longer required (except for MS13 and MS14) in the indicator code or part number.
- Housings of all electrical indicators are made of aluminum.
- The indicator model tag includes the electrical wiring diagram.
- All of our indicators, with the exception of MS16, have a "ground" terminal.
- We are now able to offer the thermal lockout option to high current indicators.
- All indicators can be installed in a filter cap as the wiring harness can be disconnected at the "DIN" connector in order to remove the filter cap.
- All MS indicators have achieved the NEMA4X and IP65 ratings.

Information on these indicators, including drawing, circuit diagram, and photograph is provided on the following pages.

A different set of electrical pressure switches is available for Schroeder tank-mounted filters, along with heavy duty versions.

Schroeder suction filters (ST and models that house the SKB magnetic suction strainer) can be equipped with a vacuum switch.

VS—Vacuum Switch (1⁄8" NPT, normally open)
P/N 7601947

VSR—Same as VS but mounted on opposite side of standard location P/N 7601947

ES—Standard electrical pressure switch (1⁄8" NPT, normally open) for tank-mounted filters
P/N 7601943 (40 psi bypass)

ESC—Electrical pressure switch (MTA & MTB only)
P/N 7601943

ESR—Same as ES but mounted on opposite side of standard location
P/N 7601943

ES1—Heavy duty electrical pressure switch (1⁄8" NPT) with conduit connection (25psi bypass) P/N 7626636
(cracking over 25 psi) P/N 7626640
(43 psi bypass) P/N 7626640
(Black = common; Red = N.O.; Blue = N.C.)

ES1R—Same as ES1 but mounted on opposite side of standard location P/N 7626636

VS1—Heavy Duty Vacuum Switch (⅛" NPT)
P/N 7623755, LF Pressure Switch

ES2— Super duty electric switch (1⁄8"NPT, normally closed) with thermal lockout P/N 7626564

ES3—Electric pressure switch (1⁄8"NPT) with DIN connector P/N 7626592
(Black = common; Red = N.O.; Blue = N.C.)

Code	Type of Contact	Electrical Rating	Connection
ES	SPST	8 Amps @ 12 VDC, 1 Amp @ 120 VAC 4 Amps @ 24 VDC, 0.5 Amp @ 240 VAC	Screw Terminal with Rubber Boot
ES1	SPDT	10 Amps @ 115 VAC 50mA-5A @ 24 VDC	½" Conduit, Male

✓c = cap installation only.

Electrical and Electrical with Thermal Lockout

MS5 MS5LC MS5T MS5LCT

Supplied with 12 inch long
18 gauge 4-conductor cable

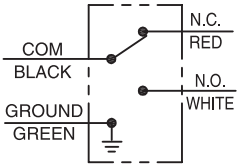

MS5/MS5LC

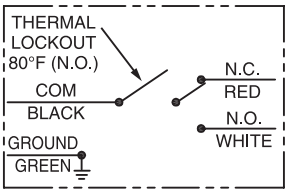

MS5T/MS5LCT

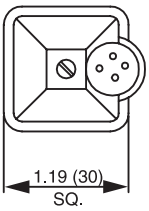

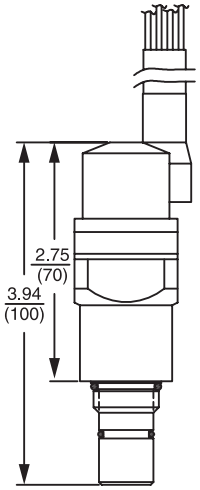

MS10 MS10LC MS10T MS10LCT

Supplied with DIN connector
(male end only)
(conforming to DIN 43650)

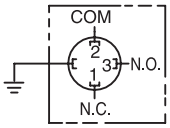

MS10/MS10LC

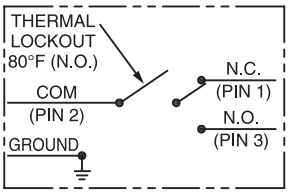

MS10T/MS10LCT

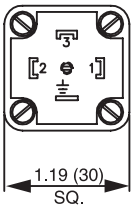

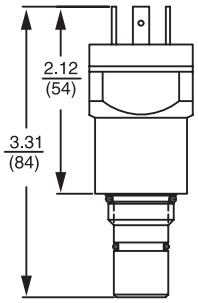

Model Codes of MSHA Version of MS10 are MS10DCM and MS10DCCM (DC only; second C designates cap). For electrical and dimensional drawings, contact factory.

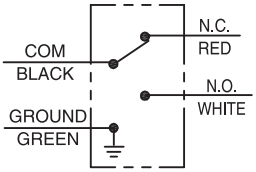

MS11

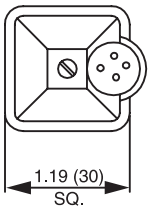

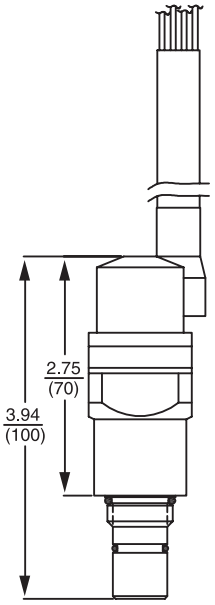

Electrical and Electrical with Thermal Lockout (cont'd.)

MS12
MS12LC
MS12T
MS12LCT

Supplied with 5 pin Brad Harrison connector (male end only)

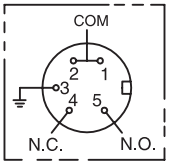

MS12/MS12LC

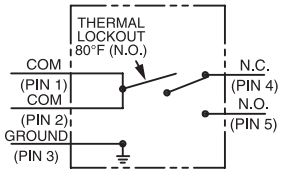

MS12T/MS12LCT

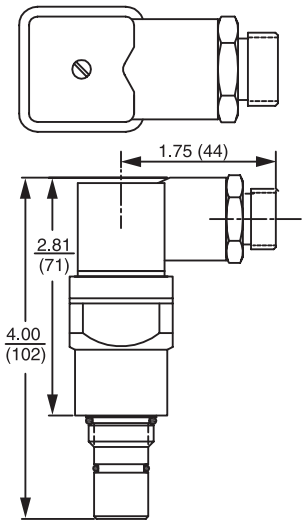

Model Codes of MSHA Version of MS12 are MS12DCM and MS12DCCM (DC only; second C designates cap). For electrical and dimensional drawings, contact factory.

MS16
MS16LC
MS16T
MS16LCT

Supplied with a female (3) contact weather-packed sealed connector supplied with DIN connector (male end only) (conforming to DIN 43650)

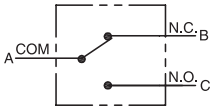

MS16/MS16LC

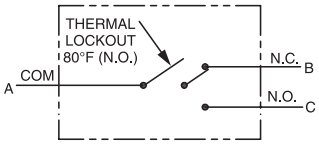

MS16T/MS16LCT

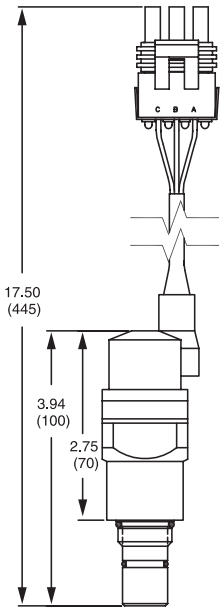

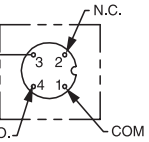

MS17LC
MS17LCT

Supplied with a 4 pin Brad Harrison "micro" connector (male end only)

MS17LC

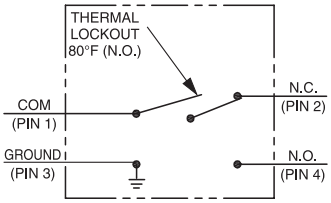

MS17LCT

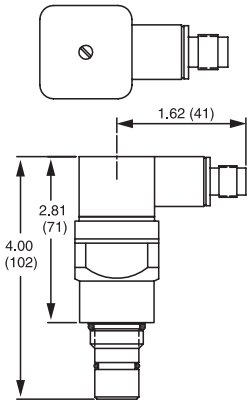

Electrical and Electrical with Thermal Lockout (cont'd.)

MS17
MS17T

Supplied with a 4 pin M12 "micro" connector (male end only) (confirming to IEC 60947-5-2)

NORMAL OPERATING PRESSURE ELECTRICAL SCHEMATIC

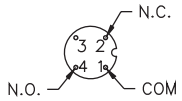

WITH THERMAL LOCKOUT

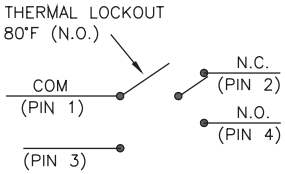

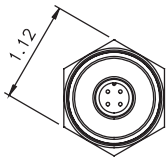

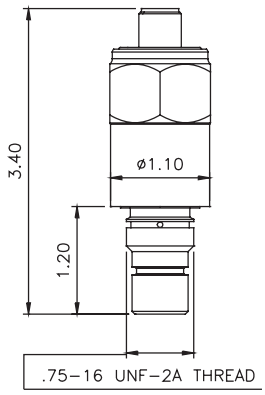

MS18
MS18LC
MS18T
MS18LCT

Supplied with a 2 pin amp junior power timer connector (male end only) (must designate N.O. or N.C.)

NORMAL OPERATING PRESSURE ELECTRICAL SCHEMATIC

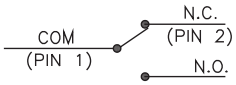

WITH THERMAL LOCKOUT

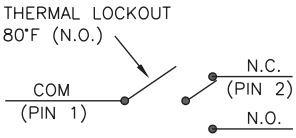

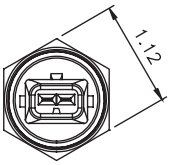

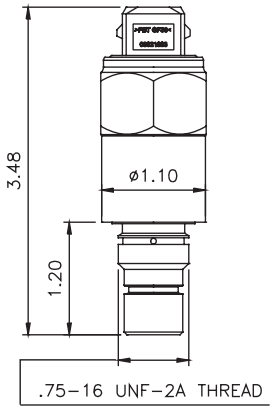

MS19
MS19LC
MS19T
MS19LCT

Supplied with a 2 pin deutsch connector (DTO4-2-P, male end only) (must designate N.O. or N.C.)

NORMAL OPERATING PRESSURE ELECTRICAL SCHEMATIC

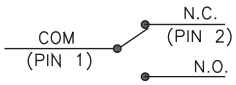

WITH THERMAL LOCKOUT

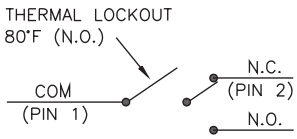

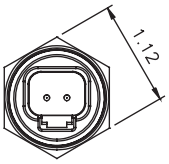

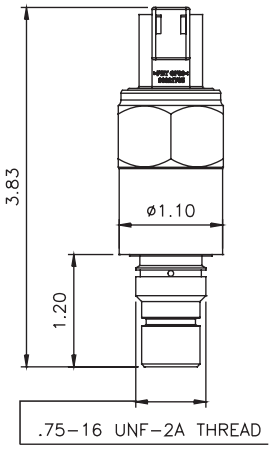

Appendix A Filter Dirt Alarm® Selection

Electrical Visual and Electrical Visual with Thermal Lockout

MS13DC, MS13DCLC MS13DCT, MS13DCLCT	MS14AC, MS14ACLC, MS14ACLCT MS14DC, MS14DCLC MS14DCT, MS14DCLCT
Supplied with threaded connector with light	Supplied with 5 pin Brad Harrison connector with light (male end only)

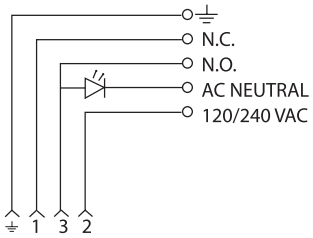

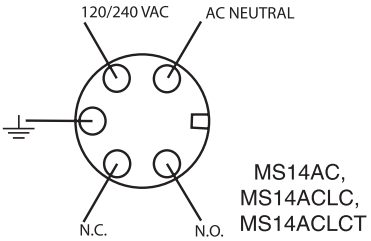

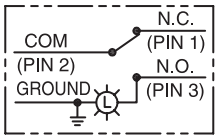

MS13DC / MS13DCLC

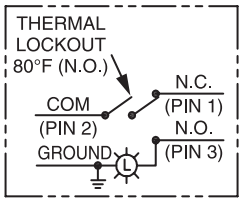

MS13DCT / MS13DCLCT

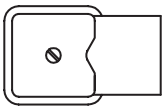

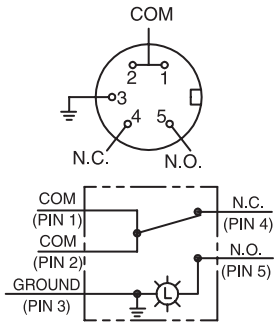

MS14DC / MS14DCLC

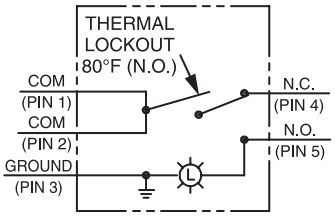

MS14DCT / MS14DCLCT

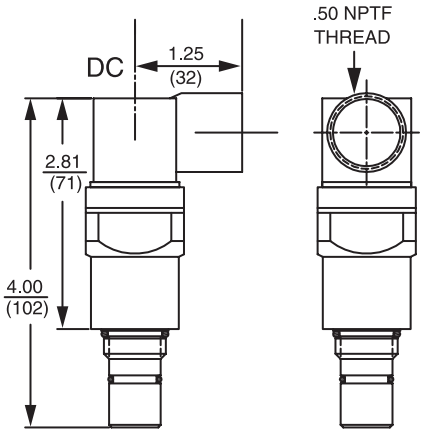

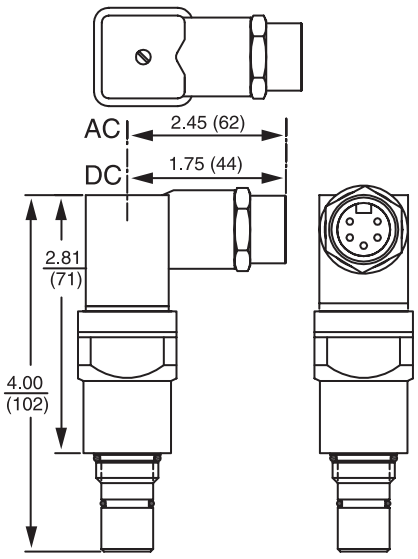

CHART 5 Electrical Ratings: Electrical Cartridge Indicators Without Thermal Lockout

Voltage	Voltage Volts@ Amps	Current Range (amps)	MS5	MS5LC	MS10	MS10LC	MS11	MS12	MS12LC	MS13DC	MS13DCLC	MS14DC	MS14DCLC	MS15DC	MS16	MS16LC	MS17	MS17LC	MS14AC	MS14ACLC	MS18	MS18LC	MS19	MS19LC
AC	240 @ 3	0.02 to 3	✓		✓		✓	✓										✓						
AC	220 @ 0.05	0.005 to 0.05		✓		✓			✓													✓		✓
AC	120 @ 5	0.02 to 5	✓		✓		✓	✓																
AC	120 @ 0.05	0.005 to 0.05		✓		✓			✓											✓		✓		✓
AC	24 @ 0.10	0.005 to 0.010		✓		✓			✓											✓				
AC	12 @ 0.25	0.005 to 0.025		✓		✓			✓											✓				
AC	120 @ 4	0.05 to 4																	✓					
AC	115 @ 0.05	0.01 to 0.05															✓				✓		✓	
DC	110 @ 0.3	0.02 to 0.3	✓		✓		✓	✓							✓		✓				✓		✓	
DC	110 @ 0.05	0.005 to 0.05		✓		✓			✓							✓		✓				✓		✓
DC	24 @ 3	0.01 to 3																			✓		✓	
DC	24 @ 2	0.02 to 2	✓		✓		✓	✓		✓		✓			✓									
DC	24 @ 1	0.01 to 1															✓							
DC	24 @ 0.20	0.0 to 0.20												✓										
DC	24 @ 0.10	0.005 to 0.10		✓		✓			✓		✓		✓			✓		✓				✓		✓
DC	12 @ 5	0.01 to 5																			✓		✓	
DC	12 @ 2	0.02 to 2	✓		✓		✓	✓		✓		✓			✓									
DC	12 @ 1	0.01 to 1															✓							
DC	12 @ 0.25	0.005 to 0.25		✓		✓			✓		✓		✓			✓		✓				✓		✓

CHART 6 Electrical Ratings: Electrical Cartridge Indicators With Thermal Lockout*

Voltage	Voltage Volts @ Amps	Current Range (amps)	MS5T	MS5LCT	MS10T	MS10LCT	MS12T	MS12LCT	MS13DCT	MS13DCLCT	MS14DCT	MS14DCLCT	MS16T	MS16LCT	MS17	MS17T	MS17LCT	MS14ACT	MS14ACLCT	MS18	MS18T	MS18LCT	MS19	MS19T	MS19LCT
AC	120 @ 5	0.02 to 5	✓		✓		✓																		
AC	220 @ 0.05	0.005 to 0.05		✓		✓		✓											✓			✓			✓
AC	120 @ 5	0.05 to 4																✓							
AC	115 @ 0.05	0.01 to 0.05													✓						✓			✓	
DC	24 @ 2	0.02 to 2	✓		✓		✓		✓		✓		✓			✓					✓			✓	
DC	24 @ 0.10	0.005 to 0.10		✓		✓		✓		✓		✓		✓			✓					✓			✓
DC	12 @ 2	0.02 to 2	✓		✓		✓		✓		✓		✓			✓					✓			✓	
DC	12 @ 0.25	0.005 to 0.25		✓		✓		✓		✓		✓		✓			✓					✓			✓

*Thermal lockout prevents activation below 80°

Note: All indicators in Charts 4 and 5 above, meet NEMA4X and IP65 specifications.

Viscosity Charts

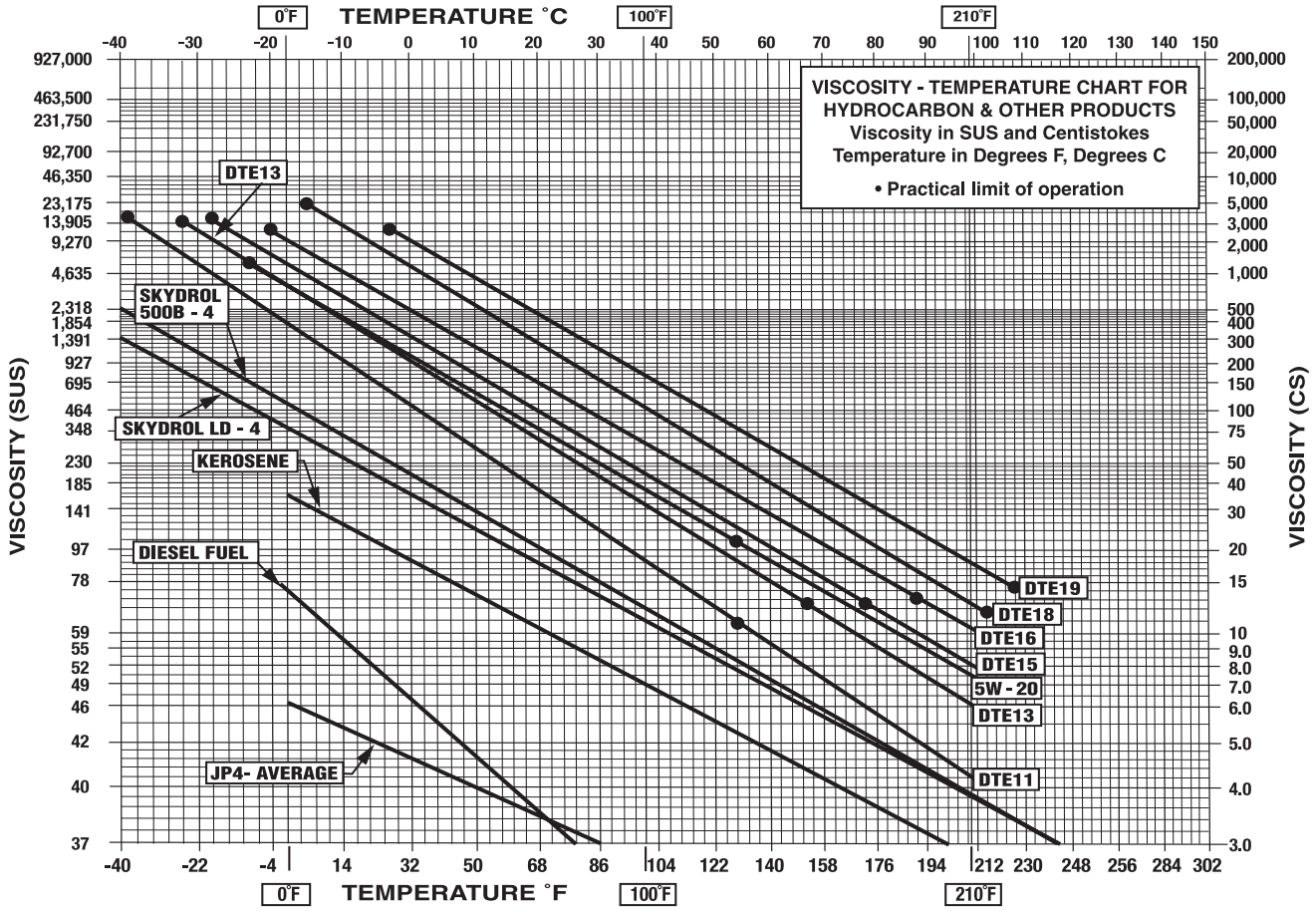

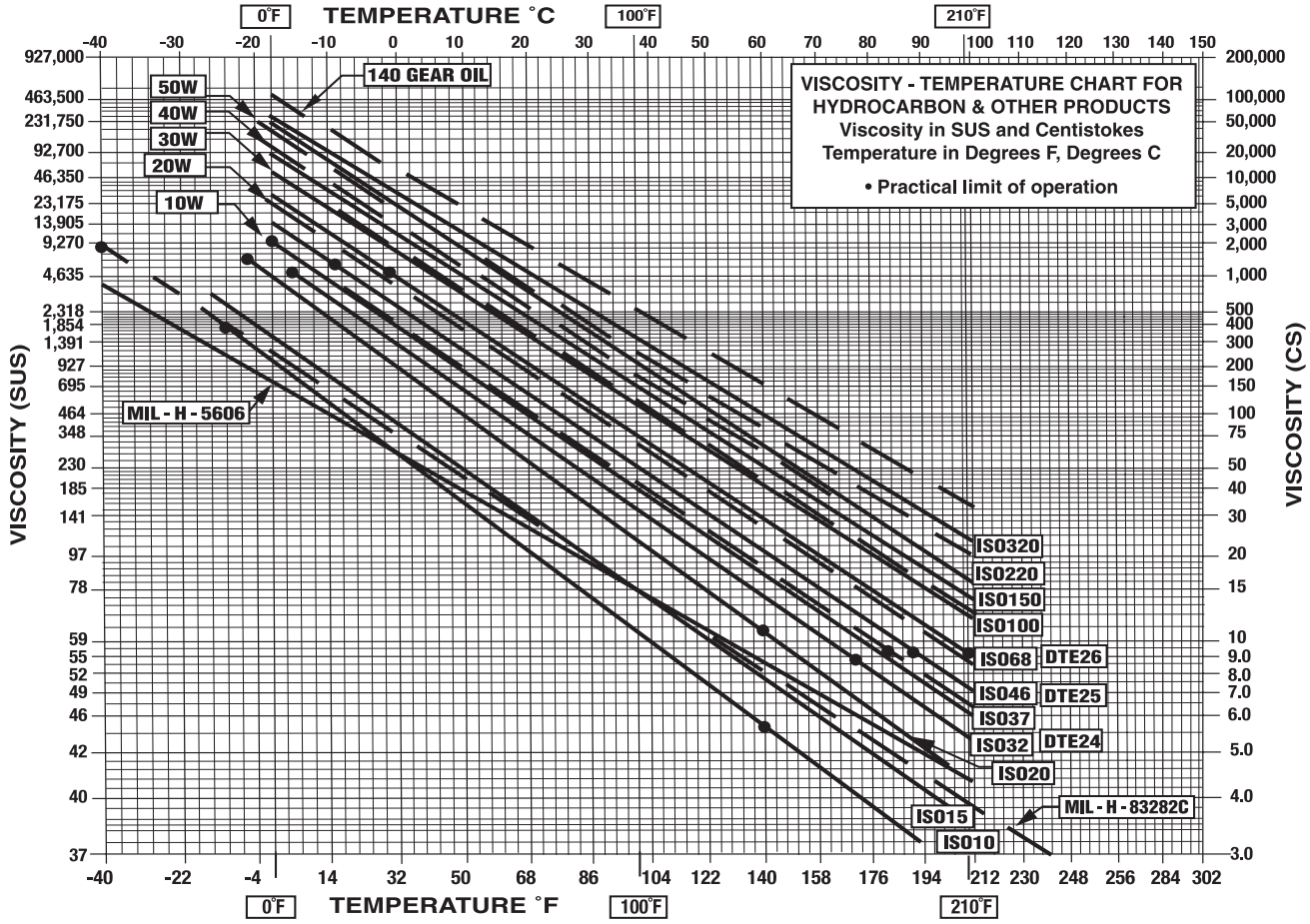

Glossary of Standard Terms

ABSOLUTE FILTRATION RATING: The diameter of the largest hard spherical particle that will pass through a filter under specified test condition. This is an indication of the largest opening in the filter element. It does not indicate the largest particle that will pass through the element, since particles of greater length than diameter may pass.

CAVITATION: A localized condition within a liquid stream causing the rapid implosion of a gaseous bubble.

CELSIUS: A temperature scale. 0 Celsius (or 0 Centigrade) is the freezing point of water (32° F).

CENTIPOISE: A unit of absolute (dynamic) viscosity.

CENTISTOKE: A unit of kinematic viscosity.

CLEANLINESS LEVEL: The analog of contamination level.

COLLAPSE PRESSURE: The outside-in differential pressure that causes structural failure.

CONTAMINATION LEVEL: A quantitative term specifying the degree of contamination.

CONTAMINANT: Any material or substance which is unwanted or adversely affects the fluid power system or components, or both.

CONTAMINANT, BUILT-IN: Initial residual contamination in a component, fluid, or system. Typical built-in contaminants are burrs, chips, flash, dirt, dust, fiber, sand, moisture, pipe dope, weld spatter, paints and solvents, flushing solutions, incompatible fluids, and operating fluid impurities.

DEPTH (FILTER): A filter medium which primarily retains contaminant within tortuous passages.

DIRT CAPACITY (DUST CAPACITY)
(CONTAMINANT CAPACITY): The weight of a specified artificial contaminant which must be added to the fluid to produce a given differential pressure across a filter at specified conditions. Used as an indication of relative service life.

EFFICIENCY (FILTER): The ability, expressed as a percent, of a filter to remove specified artificial contaminant at a given contaminant concentration under specified test conditions.

ELEMENT (CARTRIDGE): The porous device which performs the actual process of filtration.

FLOW, LAMINAR (STREAMLINE): A flow situation in which fluid moves in parallel lamina or layers. (See Reynold's number.)

FLOW, TURBULENT: A flow situation in which the fluid particles move in a random manner. (See Reynold's number.)

FLUID: A liquid, gas, or combination thereof.

FLUID POWER SYSTEM: A system that transmits and controls power through use of a pressurized fluid within an enclosed circuit.

INDICATOR: A device which provides external visual evidence of sensed phenomena.

INDICATOR, BY-PASS: An indicator which signals that an alternate flow path is being used.

INDICATOR, DIFFERENTIAL PRESSURE: An indicator which signals the difference in pressure between two points.

MICROMETER (MICRON)*: A unit of measurement one millionth of a meter long, or approximately 0.00003937 inch expressed in English Units. *Deprecated.

MIGRATION: Contaminant released downstream.

PRESSURE, CRACKING: The pressure at which a pressure-operated valve begins to pass fluid.

PRESSURE, DIFFERENTIAL (PRESSURE DROP): The difference in pressure between any two points of a system or a component.

PRESSURE, OPERATING: The pressure at which a system is operated.

PRESSURE, RATED FATIGUE: A pressure that a pressure-containing component is represented to sustain 10 million times without failure.

RATED FLOW: The maximum flow that the power supply system is capable of maintaining at a specific operating pressure.

REYNOLD'S NUMBER: A numerical ratio of the dynamic forces of mass flow to the shear stress due to viscosity. Flow usually changes from laminar to turbulent between Reynold's numbers 2,000 and 4,000.

Filter CONFIGURATIONS

Top-Ported Filter: Also known as a T-Ported or In-Line filter. All porting, the bypass valve, and indicators are located in the head. The head is permanently attached to the plumbing and the element is accessed by removing the bowl.

Base-Ported Filter: All porting, the bypass valve, and indicators are located in the base. The base is permanently attached to the plumbing and the element is removed through a cap, instead of removing the entire bowl.

Manifold Mounted Filter: Also known as a Sub-Plate filter. Most Base-Ported filters come with a manifold mount option. In some cases, a Top-Ported filter can also have a manifold mounting option. This allows the filter to be mounted directly onto a manifold, eliminating the need for hoses and fittings.

Cartridge Filter: Can be inserted directly into the manifold, eliminating the need for a separate housing or plumbing. Element is removed through a plug on the manifold.

Sandwich Filter: Is designed to be placed in between and directly interface with a manifold and stacked valves. Eliminates the need for hoses and fittings.

Duplex Filter: Made up of two or more filter assemblies. A valve allows the user to switch from one chamber to another. When one element is fully loaded, fluid is redirected though the second element. The loaded element can be changed without an interruption in flow. In the center position, the valve allows the oil to flow through both filters.

Filter CLASSIFICATIONS Types

Low Pressure Filter*: Filter pressure range from 0 to 500 psi. Mostly applied in return line filtration where system pressure is at a low point.

Medium Pressure Filter*: Filter pressure range from 500 to 1500 psi. Often used in hydrostatic charge pressure applications.

High Pressure Filter*: Filter pressure range is 1500 psi and above. Mostly applied on the pressure side of the system where pressure is highest.

High Pressure Hydrostatic Filter: Used in high pressure hydrostatic closed loop systems. Allows for reverse flow through the system.

Bypass vs. Non-Bypass: The pressure rises as an element becomes loaded with contaminants. Standard filters are equipped with a bypass valve that redirects hydraulic fluid when the pressure drop reaches a predetermined level, so the element does not lose its structural integrity. The filter element is bypassed and fluid continues on through the system.

In non-bypass filters bypass is not optional. They are used to protect expensive components that are more sensitive to contaminants, and cannot be exposed to unfiltered fluid. The element is exposed to higher pressures, as there is no bypass. For that reason this type of filter requires a high crush element to guarantee its structural integrity.

Air Breather: Filters air that is drawn into a reservoir when the fluid level changes.

Desiccant Air Breather: In addition to filtering out particle contaminants, this breather also removes water vapor.

Schroeder Industries LLC wishes to thank both the National Fluid Power Association and Penton Publishing for the use of certain generic terms shown in this glossary.
Excerpts taken from ANSI B93.2-1986/NFPA T3.10.3. 1967(R1980) and Penton Publishing's Fluid Power Handbook & Directory (2006-2007).

*These ranges have been determined to provide a quick reference for the purpose of creating our catalog. This is currently no industry standard terminology. These ranges are subject to change.

Other Product Line Catalogs

Filter Systems

The Filter Systems Catalog is designed to take the reader from the basic foundations of the principles of hydraulics found in the H&L catalog, to the tools required for troubleshooting and addressing the cleanliness or performance demands of any fluid system. We produce portable and permanent-mount pressure, flow and temperature evaluation instruments, oil cleanliness analysis devices, particle monitors and water-in-oil identification tools. We also produce a wide array of fluid conditioning tools — from standard in-line hydraulic filters, to sophisticated microprocessor-based instruments incorporating SMART® technology.

Fuel Filtration

The products contained in the Fuels Catalog, address issues relating to mobile and stationary equipment working in some of the toughest conditions all over the world. Schroeder's Fuel Filtration line ensures the smooth running of equipment and protects both the engine and the whole drive system from damage, which addresses both onboard and bulk tank requirements.

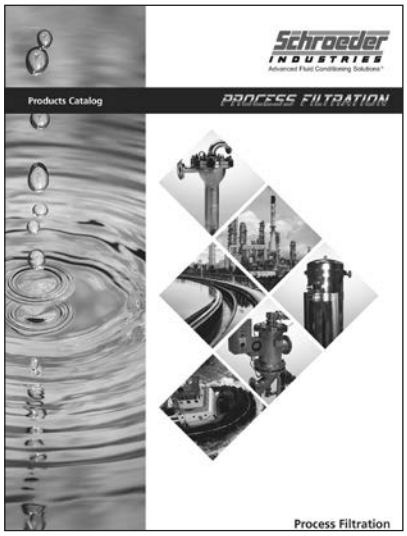

Process Filtration

The keystone product of Schroeder Process Filtration is the RF3 automatic self-cleaning backflush filter. This filter along with bag filters, cartridge filters and custom designed systems allows Schroeder to offer you complete solutions to your process filtration needs. Our process filters are used to remove solid contamination from fluids and protect the integrity of high grade components that depend on low viscosity water or water-based fluids and emulsions. Schroeder offers high performance filters for all industrial sectors. Improvements in operational efficiency, reduced downtime, lower maintenance costs and reduce environmental impact can all be expected.

To view the full version of our catalogs visit our website: www.schroederindustries.com

Notes Section:

Notes Section Continued:

Best Filter Delivery Program

Schroeder Industries is pleased to announce the establishment of the Best Filter Delivery Program. We recognize that emergencies arise despite the best planning and forecasting efforts. To be able to offer support and service in these situations, we performed an analysis to determine our top selling filter model numbers. The result is a list of thirteen specific filter assemblies, comprising high pressure, medium pressure, return line, tank-mounted and spin-on models.

For all the models listed, guaranteed shipment is same day, provided we receive the purchase order by 1:00 pm EST. An option to specify element media other than that called for on the web page is available with a 5-day guaranteed ship date after receipt of order. No other substitutions are permitted.

At the onset of this program, a distributor/customer may be limited to a maximum quantity. This may be necessary to enable Schroeder to fulfill its guarantee of adequate inventory to all distributors alike.

The intent of this program is to provide our customers with access to the products they use most often. Therefore, as we witness shifts in filter usage, we will make changes to this list and update the corresponding web page accordingly.

We hope you and your customers find this new program useful in working through unforeseen crisis situations.

Family	Product	Specifications	Standard Part Number	Alternate Elements
High Pressure, Top-Ported	NF30	20 gpm, 3000 psi, SAE 1-1/16"-12 straight porting, cartridge dirt alarm	NF301NZ10SD5	N/A
High Pressure, Top-Ported	DF40	30 gpm, 4000 psi, SAE 1-5/16"-12 straight porting, cartridge dirt alarm	DF401CCZ3SD5	CC10, CCZ5
High Pressure, Base-Ported	GKF30	100 gpm, 3000 psi, 1 element, SAE 1-7/8"-12 straight porting, cartridge dirt alarm	GKF301KGZ10SD5	KG3, KG10, KG25, KGZ1, KGZ3, KGZ25
Low Pressure, Tank-Mounted	ZT	40 gpm, 100 psi, SAE 1-5/16"-12 straight inlet port, rear mounted tricolor visible dirt alarm	ZT8Z10SY2	N/A
Low Pressure, Tank-Mounted	GRT	100 gpm, 100 psi, 2 SAE 1.5" inlet ports, tricolor visible dirt alarm	GRT1KBGZ10S24S24NY2 (GRT-6915)	K3, K10, K25, KZ1, KZ3, KZ25
Low Pressure, Tank-Mounted	GRT	100 gpm, 100 psi, 1 SAE 1.25" straight inlet port, tricolor visible dirt alarm	GRT1KBGZ10S20NNY2 (GRT-6916)	KBG3, KBG10, BG25, KBGZ1, BGZ3,KBGZ25
Low Pressure, Tank-Mounted	LRT	150 gpm, 100 psi, 2 SAE 1.5" straight inlet ports, tricolor visible dirt alarm	LRT18LZ10S24S24NY2 (LRT-1820)	N/A
Low Pressure, Spin-On	PAF1	20 gpm, 100 psi, 3/4" NPTF porting, tricolor visible dirt alarm	PAF16PZ10PY2	N/A
Low Pressure, Top-Ported	GKF3	100 gpm, 300 psi, 1 element, SAE 1-7/8"-12 straight porting, cartridge dirt alarm	GKF31KGZ25SD5	KG3, KG10, KG25, KGZ1, KGZ3, KGZ25
Medium Pressure, Top-Ported	SRLT	25 gpm, 1400 psi, SAE 1-1/16"-12 straight porting, cartridge dirt alarm	SRLT6RZ10S12D5	6RZ3, 6RZ25
Medium Pressure, Top-Ported	RLT	70 gpm, 1000 psi, 9" element, SAE 1-5/8"-12 straight porting, cartridge dirt alarm	RLT9VZ10S20D5	9V25, 9VZ25

Schroeder INDUSTRIES
Advanced Fluid Conditioning Solutions®

v.040224

2024 | L-2520

Working with over 100 partners worldwide, Schroeder Industries remains at the forefront in the fields of fluid conditioning, diagnostics, and specialized energy products. Our Hydraulic and Lubrication division provides exceptional products and services benefiting a broad range of industrial applications, including:

- **Automotive**
- **Agriculture**
- **Chemical Processing**
- **Defense**
- **Forestry**
- **Industrial**
- **Machine Tools**
- **Marine**
- **Mining Technology**
- **Mobile Vehicles**
- **Offshore**
- **Oil & Gas**
- **Oil Recycling & Reclaimation**
- **Plastic Injection**
- **Power Generation**
- **Printing**
- **Pulp & Paper**
- **Railroads**
- **Recreation**
- **Refuse**
- **Steel Making**
- **And More!**

Scan to view the digital Hydraulic and Lubrication catalog, or visit:

schroederindustries.com/resources/literature-catalogs

Schroeder INDUSTRIES
Advanced Fluid Conditioning Solutions®

*To access more information about Schroeder industries, scan the code with your app-enabled smartphone.

www.schroederindustries.com | 580 West Park Road | Leetsdale, PA 15056-1025 | 724.318.1100 p | sisales@schroederindustries.com