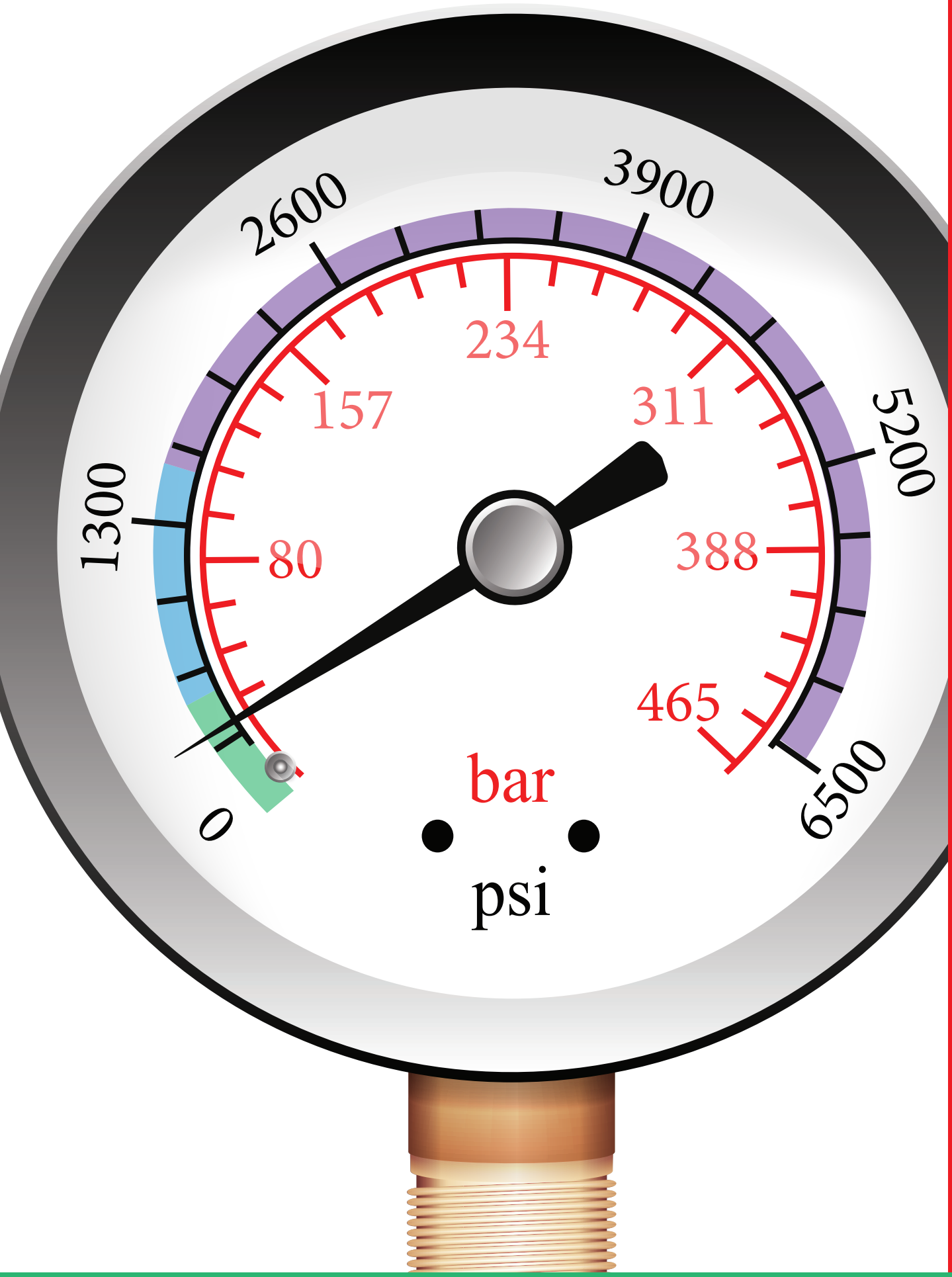

LOW PRESSURE FILTERS

Section 5:
up to 500 psi

v.082224

Low Pressure Filters Selection Guide

		Pressure psi (bar)	Flow gpm (L/min)	Element Length/Size	Page
Low Pressure Filters (up to 500 psi)	**Top-Ported Low Pressure Filters**				
	IRF	100 (7)	100 (380)	K, KK, KD, KKD	219
	TF1	300 (20)	30 (120)	A	223
	KF3 QUALITY PROTECTION	300 (20)	100 (380)	K, KK, 27K	227
	KL3 QUALITY PROTECTION	300 (20)	120 (455)	K, KK, 27K, 18LC	231
	LF1–2"	300 (20)	120 (455)	18LC	235
	MLF1 QUALITY PROTECTION	300 (20)	200 (760)	K	239
	RLD	350 (24)	100 (380)	25DN, 40D	243
	Tank-Mounted (In-Tank/Tank Top) Low Pressure Filters				
	GRTB QUALITY PROTECTION	100 (7)	100 (380)	KBG	247
	MTA	100 (7)	15 (55)	3TA	251
	MTB	100 (7)	35 (135)	3TB, 5TB	255
	ZT QUALITY PROTECTION	100 (7)	40 (150)	8Z	259
	AFT QUALITY PROTECTION	100 (7)	40 (151)	4LK, 8LK, 12LK, 16LK	263
	AFTF	100 (7)	40 (151)	4LK, 8LK, 12LK, 16LK	267
	GPT	150 (10.3)	175 (662)	15TLK	271
	KFT QUALITY PROTECTION	100 (7)	100 (380)	K, KK, KD, KKD, 27K	273
	RT QUALITY PROTECTION	100 (7)	100 (380)	K, KK, KD, KKD, 27K	277
	RTI	100 (7)	120 (455)	KI, KKI, 27KI	281
	LRT QUALITY PROTECTION	100 (7)	150 (570)	18L, 18LD	285
	ART	145 (10)	225 (850)	85Z1, 85Z3, 85Z5, 85Z10, 85Z25	289
	BRT QUALITY PROTECTION	145 (10)	160 (600)	2RBZ10/25, 3RBZ10/25, 4RBZ10/25, 6RBZ10/25	293
	TRT QUALITY PROTECTION	145 (10)	634 (2400)	2RTZ10/25, 3RTZ10/25, 4RTZ10/25, 6RTZ10/25	299
	BFT	100 (7)	300 (1135)	BB	305
	QT	100 (7)	450 (1700)	16Q, 16QPML, 39Q, 39QPML	309
	Special Feature Tank-Mounted Low Pressure Filters				
	Internal KTK QUALITY PROTECTION	100 (7)	100 (380)	K, KK, 27K	313
	Internal LTK	100 (7)	150 (570)	18L	317
	Severe Duty Tank-Mounted				
	MRT	900 (62)	150 (570)	18L	321
	Spin-On Low Pressure Filters				
	PAF1	100 (7)	20 (75)	6P	327
	MAF1	100 (7)	50 (190)	M, 10M	331
	MF2	150 (10)	60 (230)	M, 10M	335

Inline Return Filter

IRF

Model No. of filter in photograph is IRF2KZ10S20Y2.

Features and Benefits

- Low pressure top servicing in-line filter
- Meets HF4 automotive standard
- Unique side mounting flange provides reliable seal arrangement between head and bowl
- The use of K-size elements allows consolidation of inventoried replacement elements
- Single and double length options provide optimal size for specific applications
- Also available with new DirtCatcher® elements (KDZ and KKDZ)
- Various Dirt Alarm® options

100 gpm
380 L/min
100 psi
7 bar

Filter Housing Specifications

Flow Rating:	Up to 100 gpm (380 L/min) for 150 SUS (32 cSt) fluids
Max. Operating Pressure:	100 psi (7 bar)
Min. Yield Pressure:	400 psi (28 bar), per NFPA T2.6.1
Rated Fatigue Pressure:	90 psi (6 bar), per NFPA T2.6.1-2005
Temp. Range:	-20°F to 225°F (-29°C to 107°C)
Bypass Setting:	Cracking: 25 psi (1.7 bar) Full Flow: 48 psi (3.3 bar)
Porting Head: Element Case:	Sand Cast Aluminum Steel
Weight of IRF-1K: Weight of IRF-2K:	13.5 lbs. (6.12 kg) 17.0 lbs. (7.71 kg)
Element Change Clearance:	8.0" (205 mm) for 1K; 17.50" (445 mm) for KK

Fluid Compatibility

Type Fluid	Appropriate Schroeder Media
Petroleum Based Fluids	All E media (cellulose), Z-Media® and ASP® media (synthetic)
High Water Content	All Z-Media® and ASP® media (synthetic)
Invert Emulsions	10 and 25 µ Z-Media® (synthetic), 10 µ ASP® media (synthetic)
Water Glycols	3, 5, 10 and 25 µ Z-Media® (synthetic), 3, 5, and 10 µ ASP® media (synthetic)
Phosphate Esters	All Z-Media® (synthetic) with H (EPR) seal designation and 3 and 10 µ E media (cellulose) with H (EPR) seal designation and all ASP® Media (synthetic)
Skydrol®	3, 5, 10 and 25 µ Z-Media® (synthetic) with H.5 seal designation (EPR seals and stainless steel wire mesh in element, and light oil coating on housing exterior) and all ASP® media (synthetic)

Inline Return Filter

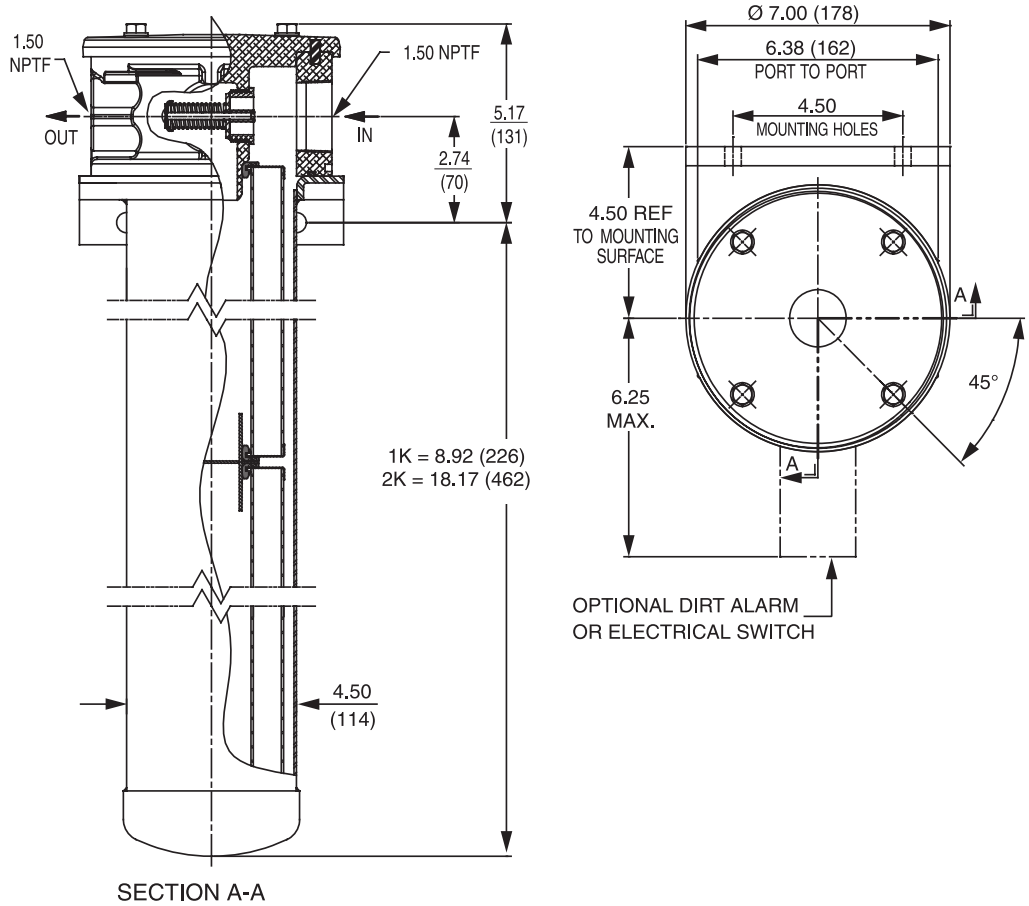

Metric dimensions in ( ).

Element Performance Information & Dirt Holding Capacity

Element	Filtration Ratio Per ISO 4572/NFPA T3.10.8.8 Using automated particle counter (APC) calibrated per ISO 4402			Filtration Ratio per ISO 16889 Using APC calibrated per ISO 11171	
	$ß_x \geq 75$	$ß_x \geq 100$	$ß_x \geq 200$	$ß_x^{(c)} \geq 200$	$ß_x^{(c)} \geq 1000$
KZ1/KKZ1/27KZ1	<1.0	<1.0	<1.0	<4.0	4.2
KZ3/KKZ3	<1.0	<1.0	<2.0	<4.0	4.8
KZ5/KKZ5	2.5	3.0	4.0	4.8	6.3
KZ10/KKZ10	7.4	8.2	10.0	8.0	10.0
KZ25/KKZ25/27KZ25	18.0	20.0	22.5	19.0	24.0
KZW1	N/A	N/A	N/A	<4.0	<4.0
KZW3/KKZW3	N/A	N/A	N/A	4.0	4.8
KZW5/KKZW5	N/A	N/A	N/A	5.1	6.4
KZW10/KKZW10	N/A	N/A	N/A	6.9	8.6
KZW25/KKZW25	N/A	N/A	N/A	15.4	18.5

Element	DHC (g)	Element	DHC (g)	Element	DHC (g)	Element	DHC (g)	Element	DHC (g)	Element	DHC (g)	Element	DHC (g)
KZ1	112	KKZ1	224	27KZ1	336	KDZ1	89	KKDZ1	188	KZW1	61		
KZ3	115	KKZ3	230	27KZ3	345	KDZ3	71	KKDZ3	150	KZW3	64	KKZW3	128
KZ5	119	KKZ5	238	27KZ5	357	KDZ5	100	KKDZ5	210	KZW5	63	KKZW5	126
KZ10	108	KKZ10	216	27KZ10	324	KDZ10	80	KKDZ10	168	KZW10	57	KKZW10	114
KZ25	93	KKZ25	186	27KZ25	279	KDZ25	81	KKDZ25	171	KZW25	79	KKZW25	158

Element Collapse Rating: 150 psid (10 bar) for standard elements
Flow Direction: Outside In
Element Nominal Dimensions:
K: 3.9" (99 mm) O.D. x 9.0" (230 mm) long
KK: 3.9" (99 mm) O.D. x 18.0" (460 mm) long
27K: 3.9" (99 mm) O.D. x 27.0" (690 mm) long

Pressure Drop Information

Based on Flow Rate and Viscosity

$\Delta P_{housing}$

IRF $\Delta P_{housing}$ for fluids with sp gr (specific gravity) = 0.86:

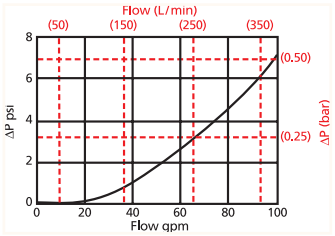

$\Delta P_{element}$

1KZ

Element Pressure Drop versus Flow Rate at 32 cSt (150 SUS)

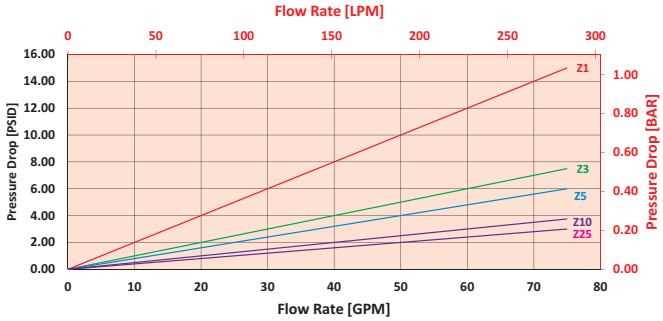

2KZ/KKZ

Element Pressure Drop versus Flow Rate at 32 cSt (150 SUS)

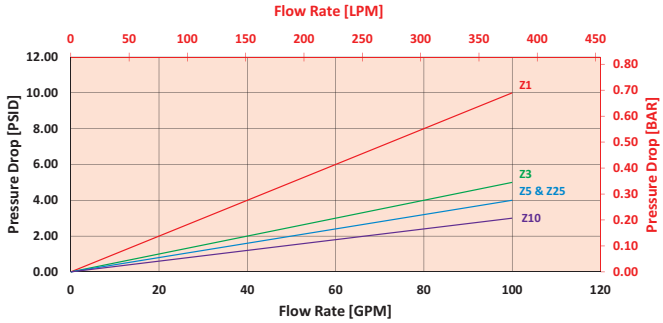

$$\Delta P_{filter} = \Delta P_{housing} + (\Delta P_{element} * V_f)$$

Exercise:

Determine ΔP_{filter} at 70 gpm (265.3 L/min) for IRF2KZ10S20Y2 using 160 SUS (34 cSt) fluid.

Use the housing pressure curve to determine $\Delta P_{housing}$ at 70 gpm. In this case, $\Delta P_{housing}$ is 3.5 psi (.24 bar) on the graph for the IRF housing.

Use the element pressure curve to determine $\Delta P_{element}$ at 70 gpm. In this case, $\Delta P_{element}$ is 2 psi (.14 bar) according to the graph for the 2KZ10 element.

Because the viscosity in this sample is 160 SUS (24 cSt), we determine the Viscosity Factor (V_f) by dividing the Operating Fluid Viscosity with the Standard Viscosity of 150 SUS (32 cSt). To best determine your Operating Fluid Viscosity, please reference the chart in Appendix D.

Finally, the overall filter pressure differential, ΔP_{filter}, is calculated by adding $\Delta P_{housing}$ with the true element pressure differential, ($\Delta P_{element} * V_f$). The $\Delta P_{element}$ from the graph has to be multiplied by the viscosity factor to get the true pressure differential across the element.

Solution:

$\Delta P_{housing}$ = 3.5 psi [.24 bar] | $\Delta P_{element}$ = 2 psi [.14 bar]

V_f = 160 SUS (34 cSt) / 150 SUS (32 cSt) = 1.1

ΔP_{filter} = 3.5 psi + (2 psi * 1.1) = 5.7 psi

OR

ΔP_{filter} = .24 bar + (.14 bar * 1.1) = .39 bar

Note:
If your element is not graphed, use the following equation:
$\Delta P_{element}$ = Flow Rate x $\Delta P_{f.}$ Plug this variable into the overall pressure drop equation.

Ele.	ΔP	Ele.	ΔP
K3	0.25	2K3	0.12
K10	0.09	2K10	0.05
K25	0.02	2K25	0.01
KAS3	0.10	2KAS3	0.05
KAS5	0.08	2KAS5	0.04
KAS10	0.05	2KAS10	0.03
KDZ1	0.24	2KDZ1	0.12
KDZ3	0.12	2KDZ3	.0.6
KDZ5	0.10	2KDZ5	0.05
KDZ10	0.06	2KDZ10	0.03
KDZ25	0.04	2KDZ25	0.02
KZW1	0.43	2KZW1	-
KZW3	0.32	2KZW3	0.16
KZW5	0.28	2KZW5	0.14
KZW10	0.23	2KZW10	0.12
KZW25	0.14	2KZW25	0.07

Inline Return Filter

Filter Model Number Selection

How to Build a Valid Model Number for a Schroeder IRF:

BOX 1	BOX 2	BOX 3	BOX 4	BOX 5	BOX 6	BOX 7	BOX 8
IRF							

Example: NOTE: One option per box

BOX 1	BOX 2	BOX 3	BOX 4	BOX 5	BOX 6	BOX 7	BOX 8	
IRF	2K	Z	10		S20		Y2	= IRF2KZ10S20Y2

BOX 1

Filter Series
IRF

BOX 2

Number and Size of Elements	
1 =	K, KK
2 =	K

BOX 3

Element Type	
Omit =	E media (cellulose)
AS =	Anti-Static Pleat Media
Z =	Excellement® Z-Media® (synthetic)
ZW =	Aqua-Excellement® ZW media
W =	Water Removal media
M =	M media (reusable metal)
DZ =	DirtCatcher® Excellement® Z-Media®

BOX 4

Micron Rating		
1 =	1 µ	(Z, ZW and DZ media)
3 =	3 µ	(E, AS, Z, ZW and DZ media)
5 =	5 µ	(AS, Z, ZW and DZ media)
10 =	10 µ	(E, AS, Z, ZW and DZ media)
25 =	25 µ	(E, AS, Z, ZW and DZ media)
60 =	60 µ	(M media)

BOX 5

Seal Material	
Omit =	Buna N
H =	EPR
V =	Viton®

BOX 6

Inlet Porting	
P16 =	1" NPTF
P20 =	1¼" NPTF
S16 =	SAE-16
S20 =	SAE-20
F20 =	1¼" SAE 4-bolt flange Code 61
F24 =	1½" SAE 4-bolt flange Code 61
B24 =	ISO 228 G-1½"

BOX 7

Bypass Setting
Omit = 25 PSI Bypass
40 = 40 PSI Bypass

BOX 8

Dirt Alarm® Options			
		Omit =	None
Located @ Port D (Standard)	Visual	Y2 =	Back-mounted tri-color gauge
	Electrical	ES =	Electrical switch
		ES1 =	Heavy-duty electrical switch with conduit connector
		ES2=	Electrical Switch with Deutsch Connector
Located @ Port C (Optional)	Visual	Y2R =	Back-mounted gauge mounted on opposite side of standard location
	Electrical	ESR =	Electrical switch mounted on opposite side of standard location
		ES1R =	Heavy-duty electrical switch with conduit connector

Port Configuration

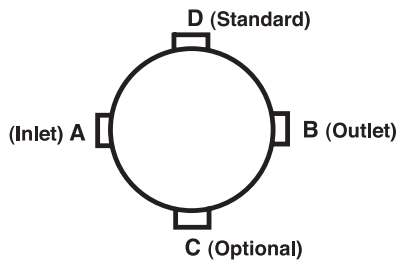

NOTES:

Box 2. Number of elements must equal 1 when using KK elements.

Box 3. Replacement element part numbers are identical to contents of Boxes 2, 3, 4, and 5. Double stacking of K-size elements can be replaced by single KK elements.

Box 5. Viton® is a registered trademark of DuPont Dow Elastomers.

Return Line Filter TF1

Model No. of filter in photograph is TF11AZ10S.

Features and Benefits

- Offered in pipe, SAE straight thread, flange and ISO 228 porting
- Various Dirt Alarm® options
- Available with No-Element indicator
- Available with NPTF inlet and outlet female test ports
- Available with magnet inserts
- Available with housing drain plug

30 gpm 120 L/min

300 psi 20 bar

Filter Housing Specifications

Flow Rating:	Up to 30 gpm (120 L/min) for 150 SUS (32 cSt) fluids
Max. Operating Pressure:	300 psi (20 bar)
Min. Yield Pressure:	1200 psi (80 bar), per NFPA T2.6.1
Rated Fatigue Pressure:	270 psi (19 bar), per NFPA T2.6.1-2005
Temp. Range:	-20°F to 225°F (-29°C to 107°C)
Bypass Setting:	Cracking: 30 psi (2 bar) Full Flow: 51 psi (4 bar)
Porting Head: Element Case:	Cast Aluminum Steel (TF1) or Stainless Steel (WTF1)
Weight of TF1-1A: Weight of TF1-2A:	5.1 lbs. (2.3 kg) 6.3 lbs. (2.9 kg)
Element Change Clearance:	3.50" (90 mm)

Fluid Compatibility

Type Fluid	Appropriate Schroeder Media
Petroleum Based Fluids	All E media (cellulose) and Z-Media® (synthetic)
High Water Content	All Z-Media® (synthetic)
Invert Emulsions	10 and 25 µ Z-Media® (synthetic)
Water Glycols	3, 5, 10 and 25 µ Z-Media® (synthetic)
Phosphate Esters	All Z-Media® (synthetic) with H (EPR) seal designation
Skydrol®	3, 5, 10 and 25 µ Z-Media® (synthetic) with H.5 seal designation (EPR seals and stainless steel wire mesh in element, and light oil coating on housing exterior)

TF1 Return Line Filter

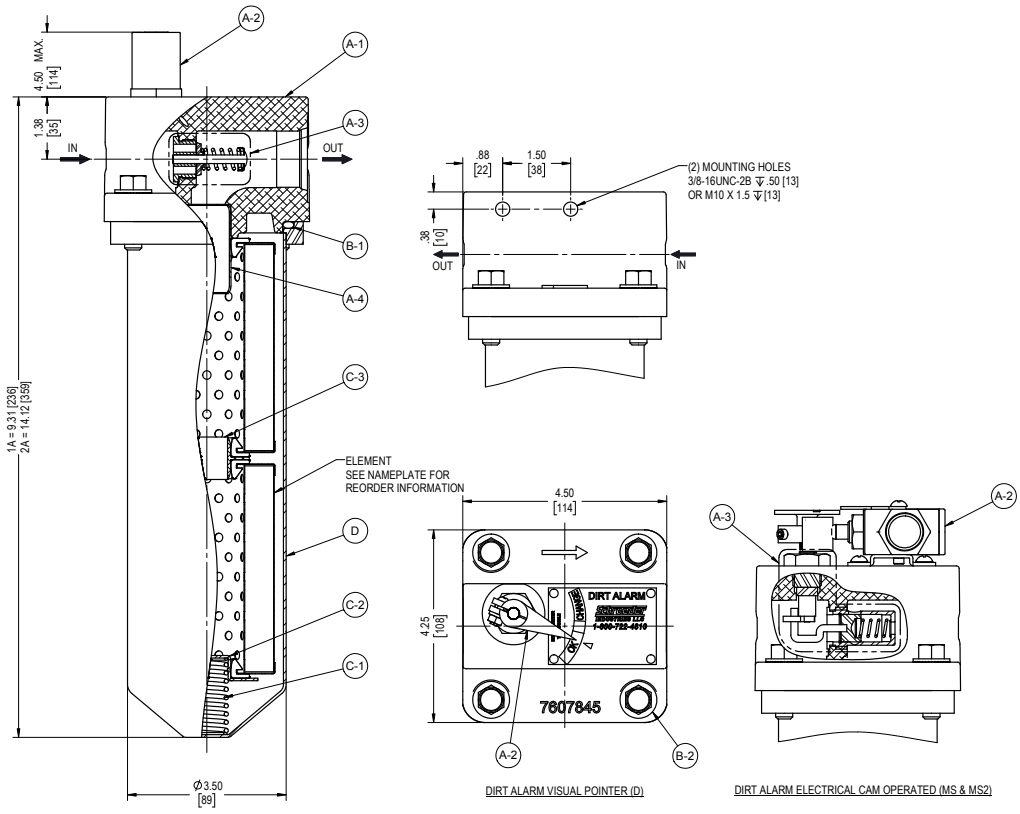

Metric dimensions in ( ).

Element Performance Information & Dirt Holding Capacity

Element	Filtration Ratio Per ISO 4572/NFPA T3.10.8.8 Using automated particle counter (APC) calibrated per ISO 4402			Filtration Ratio per ISO 16889 Using APC calibrated per ISO 11171	
	$ß_x \geq 75$	$ß_x \geq 100$	$ß_x \geq 200$	$ß_x^{(c)} \geq 200$	$ß_x^{(c)} \geq 1000$
AZ1	<1.0	<1.0	<1.0	<4.0	4.2
AZ3	<1.0	<1.0	<2.0	<4.0	4.8
AZ5	2.5	3.0	4.0	4.8	6.3
AZ10	7.4	8.2	10.0	8.0	10.0
AZ25	18.0	20.0	22.5	19.0	24.0

Element	DHC (gm)
A3	16
A10	13
AZ1	25
AZ3	26
AZ5	30
AZ10	28
AZ25	28

Element Collapse Rating: 150 psid (10 bar)

Flow Direction: Outside In

Element Nominal Dimensions: 3.0" (75 mm) O.D. x 4.5" (115 mm) long

Pressure Drop Information

Based on Flow Rate and Viscosity

$\Delta P_{housing}$

TF1 $\Delta P_{housing}$ for fluids with sp gr (specific gravity) = 0.86:

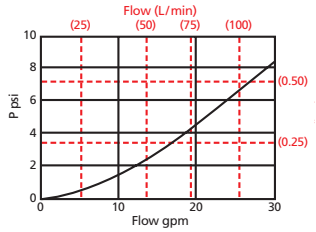

$\Delta P_{element}$

AZ

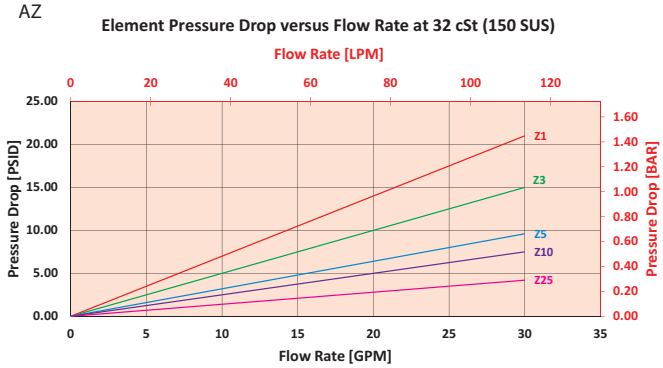

2AZ

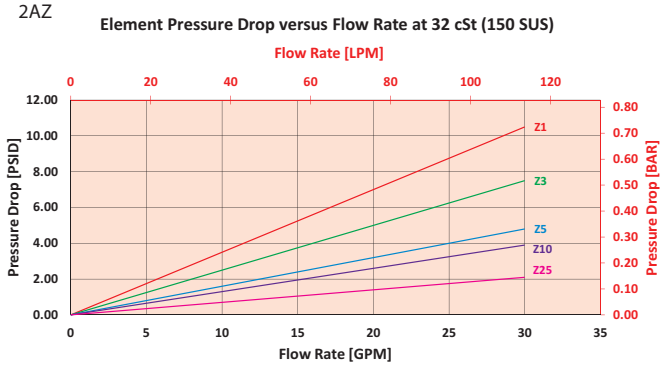

$$\Delta P_{filter} = \Delta P_{housing} + (\Delta P_{element} * V_f)$$

Exercise:

Determine ΔP_{filter} at 15 gpm (57 L/min) for TF11AZ3PD5 using 175 SUS (37.2 cSt) fluid.

Use the housing pressure curve to determine $\Delta P_{housing}$ at 15 gpm. In this case, $\Delta P_{housing}$ is 3 psi (.21 bar) on the graph for the TF1 housing.

Use the element pressure curve to determine $\Delta P_{element}$ at 15 gpm. In this case, $\Delta P_{element}$ is 7.5 psi (.52 bar) according to the graph for the AZ3 element.

Because the viscosity in this sample is 175 SUS (37.2 cSt), we determine the Viscosity Factor (V_f) by dividing the Operating Fluid Viscosity with the Standard Viscosity of 150 SUS (32 cSt). To best determine your Operating Fluid Viscosity, please reference the chart in Appendix D.

Finally, the overall filter pressure differential, ΔP_{filter}, is calculated by adding $\Delta P_{housing}$ with the true element pressure differential, ($\Delta P_{element} * V_f$). The $\Delta P_{element}$ from the graph has to be multiplied by the viscosity factor to get the true pressure differential across the element.

Solution:

$\Delta P_{housing}$ = 3 psi [.21 bar] | $\Delta P_{element}$ = 7.5 psi [.52 bar]

V_f = 175 SUS (37.2 cSt) / 150 SUS (32 cSt) = 1.2

ΔP_{filter} = 3 psi + (7.5 psi * 1.2) = 12 psi

OR

ΔP_{filter} = .21 bar + (.52 bar * 1.2) = .83 bar

Note:
If your element is not graphed, use the following equation:
$\Delta P_{element}$ = Flow Rate x $\Delta P_{f.}$ Plug this variable into the overall pressure drop equation.

Ele.	ΔP	Ele.	ΔP
A3	0.53	AA3	0.27
A10	0.36	AA10	0.18
A25	0.05	AA25	0.03

Return Line Filter

Filter Model Number Selection

How to Build a Valid Model Number for a Schroeder TF1:

BOX 1	BOX 2	BOX 3	BOX 4	BOX 5	BOX 6	BOX 7	BOX 8	BOX 9
TF1 –	–	–	–	–	–	–	–	–

Example: NOTE: Only box 9 may contain more than one option

BOX 1	BOX 2	BOX 3	BOX 4	BOX 5	BOX 6	BOX 7	BOX 8	BOX 9	
TF1 –	1 –	A3 –	–	–	P –	–	D5 –	–	= TF11A3PD5

BOX 1

Filter Series
TF1
WTF1

BOX 2

Number of Elements
1
2

BOX 3

Element Part Number
A3 = 3 µ E media (cellulose)
A10 = 10 µ E media (cellulose)
A25 = 25 µ E media (cellulose)
AZ1 = 1 µ Excellement® Z-Media® (synthetic)
AZ3 = 3 µ Excellement® Z-Media® (synthetic)
AZ5 = 5 µ Excellement® Z-Media® (synthetic)
AZ10 = 10 µ Excellement® Z-Media® (synthetic)
AZ25 = 25 µ Excellement® Z-Media® (synthetic)
AM10 = 10 µ M media (reusable metal)
AM25 = 25 µ M media (reusable metal)
AM60 = 60 µ M media (reusable metal)
AM150 = 150 µ M media (reusable metal)

BOX 4

Seal Material
Omit = Buna N
H = EPR
V = Viton®
H.5 = Skydrol® compatibility

BOX 5

Magnet Option
Omit = None
M = Magnet inserts

BOX 6

Porting Options
P = 1" NPTF
S = SAE-16
B = ISO 228 G-1"

BOX 7

Bypass Settings
Omit = 30 psi bypass
40 = 40 psi bypass

BOX 8

	Dirt Alarm® Options
	Omit = None
Visual	D = Pointer
	D5 = Visual pop-up
Visual with Thermal Lockout	D8 = Visual w/ thermal lockout
Electrical	MS5 = Electrical w/ 12 in. 18 gauge 4-conductor cable
	MS5LC = Low current MS5
	MS10 = Electrical w/ DIN connector (male end only)
	MS10LC = Low current MS10
	MS11 = Electrical w/ 12 ft. 4-conductor wire
	MS12 = Electrical w/ 5 pin Brad Harrison connector (male end only)
	MS12LC = Low current MS12
	MS16 = Electrical w/ weather-packed sealed connector
	MS16LC = Low current MS16
	MS17LC = Electrical w/ 4 pin Brad Harrison male connector
Electrical with Thermal Lockout	MS5T = MS5 (see above) w/ thermal lockout
	MS5LCT = Low current MS5T
	MS10T = MS10 (see above) w/ thermal lockout
	MS10LCT = Low current MS10T
	MS12T = MS12 (see above) w/ thermal lockout
	MS12LCT = Low current MS12T
	MS16T = MS16 (see above) w/ thermal lockout
	MS16LCT = Low current MS16T
	MS17LCT = Low current MS17T
Electrical Visual	MS = Cam operated switch w/ ½" conduit female connection
	MS13 = Supplied w/ threaded connector & light
	MS14 = Supplied w/ 5 pin Brad Harrison connector & light (male end)
Electrical Visual with Thermal Lockout	MS13DCT = MS13 (see above), direct current, w/ thermal lockout
	MS13DCLCT = Low current MS13DCT
	MS14DCT = MS14 (see above), direct current, w/ thermal lockout
	MS14DCLCT = Low current MS14DCT

BOX 9

Test Points
Omit = None
L = Two ¼" NPTF inlet and outlet female test ports
N = No-Element indicator
G440 = ½" drain on bottom of housing

NOTES:

Box 1. WTF1 includes a Anodized Head and a Stainless Steel Bowl.

Box 3. Replacement element part numbers are identical to contents of Boxes 3 and 4. E media elements are only available with Buna N seals.

Box 4. For option V, all aluminum parts are anodized. H.5 seal designation includes the following: EPR seals, stainless steel wire mesh on elements, and light oil coating on housing exterior. Viton® is a registered trademark of DuPont Dow Elastomers. Skydrol® is a registered trademark of Solutia Inc.

Box 6. B porting option supplied with metric mounting holes.

Return Line Filter KF3

Model No. of filter in photograph is KF31K10SD5.

Features and Benefits

- Meets HF4 automotive standard
- Offered in pipe, SAE straight thread, flange and ISO 228 porting
- Various Dirt Alarm® options
- Available with No-Element indicator
- Available with NPTF inlet and outlet female test ports
- Available with magnet inserts
- Available with housing drain plug
- Takes the standard "K" element in K, KK or 27K lengths
- Allows consolidation of inventoried replacement elements by using K-size elements
- Also available with DirtCatcher® elements (KD & KKD)
- G Available with quality-protected GeoSeal® Elements (GKF3)

Part of Schroeder Industries' Energy Sustainability Initiative

100 gpm
380 L/min
300 psi
20 bar

Filter Housing Specifications

Flow Rating:	Up to 100 gpm (380 L/min) for 150 SUS (32 cSt) fluids
Max. Operating Pressure:	300 psi (20 bar)
Min. Yield Pressure:	1000 psi (70 bar), per NFPA T2.6.1
Rated Fatigue Pressure:	290 psi (20 bar), per NFPA T2.6.1-2005
Temp. Range:	-20°F to 225°F (-29°C to 107°C)
Bypass Setting:	Cracking: 30 psi (2 bar) Full Flow: 51 psi (4 bar)
Porting Head: Element Case:	Die Cast Aluminum Steel
Weight of KF3-1K: Weight of KF3-2K: Weight of KF3-3K:	10.5 lbs. (4.8 kg) 14.2 lbs. (6.4 kg) 18.5 lbs. (8.4 kg)
Element Change Clearance:	1.50" (40 mm) for all lengths

Fluid Compatibility

Type Fluid	Appropriate Schroeder Media
Petroleum Based Fluids	All E media (cellulose), Z-Media® and ASP® media (synthetic)
High Water Content	All Z-Media® and ASP® Media (synthetic)
Invert Emulsions	10 and 25 µ Z-Media® (synthetic), 10 µ ASP® media (synthetic)
Water Glycols	3, 5, 10 and 25 µ Z-Media® (synthetic), 3, 5, and 10 µ ASP® Media (synthetic)
Phosphate Esters	All Z-Media® (synthetic) with H (EPR) seal designation and 3 and 10 µ E media (cellulose) with H (EPR) seal designation and all ASP® media (synthetic)
Skydrol®	3, 5, 10 and 25 µ Z-Media® (synthetic) with H.5 seal designation (EPR seals and stainless steel wire mesh in element, and light oil coating on housing exterior) and all ASP® media (synthetic)

KF3 Return Line Filter

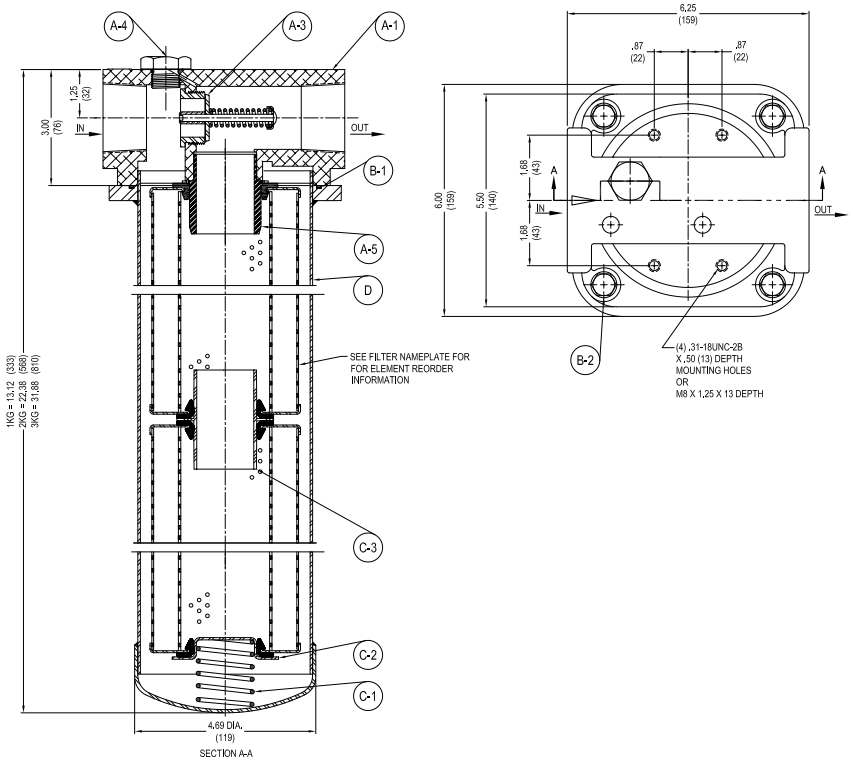

Metric dimensions in ( ).

Element Performance Information & Dirt Holding Capacity

Element	Filtration Ratio Per ISO 4572/NFPA T3.10.8.8 Using automated particle counter (APC) calibrated per ISO 4402			Filtration Ratio per ISO 16889 Using APC calibrated per ISO 11171	
	$ß_x \geq 75$	$ß_x \geq 100$	$ß_x \geq 200$	$ß_x(c) \geq 200$	$ß_x(c) \geq 1000$
KZ1/KKZ1/27KZ1	<1.0	<1.0	<1.0	<4.0	4.2
KZ3/KKZ3/27KZ3	<1.0	<1.0	<2.0	<4.0	4.8
KZ5/KKZ5/27KZ5	2.5	3.0	4.0	4.8	6.3
KZ10/KKZ10/27KZ10	7.4	8.2	10.0	8.0	10.0
KZ25/KKZ25/27KZ25	18.0	20.0	22.5	19.0	24.0
KZW1	N/A	N/A	N/A	<4.0	<4.0
KZW3/KKZW3	N/A	N/A	N/A	4.0	4.8
KZW5/KKZW5	N/A	N/A	N/A	5.1	6.4
KZW10/KKZW10	N/A	N/A	N/A	6.9	8.6
KZW25/KKZW25	N/A	N/A	N/A	15.4	18.5

Element	DHC (g)	Element	DHC (g)	Element	DHC (g)	Element	DHC (g)	Element	DHC (g)	Element	DHC (g)	Element	DHC (g)
KZ1	112	KKZ1	224	27KZ1	336	KDZ1	89	KKDZ1	188	KZW1	61		
KZ3	115	KKZ3	230	27KZ3	345	KDZ3	71	KKDZ3	150	KZW3	64	KKZW3	128
KZ5	119	KKZ5	238	27KZ5	357	KDZ5	100	KKDZ5	210	KZW5	63	KKZW5	126
KZ10	108	KKZ10	216	27KZ10	324	KDZ10	80	KKDZ10	168	KZW10	57	KKZW10	114
KZ25	93	KKZ25	186	27KZ25	279	KDZ25	81	KKDZ25	171	KZW25	79	KKZW25	158

Element Collapse Rating: 150 psid (10 bar) for standard elements

Flow Direction: Outside In

Element Nominal Dimensions:
- K: 3.9" (99 mm) O.D. x 9.0" (230 mm) long
- KK: 3.9" (99 mm) O.D. x 18.0" (460 mm) long
- 27K: 3.9" (99 mm) O.D. x 27.0" (690 mm) long

Pressure Drop Information

Based on Flow Rate and Viscosity

$\Delta P_{housing}$

KF3 $\Delta P_{housing}$ for fluids with sp gr (specific gravity) = 0.86:

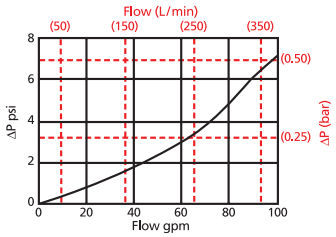

$\Delta P_{element}$

KZ

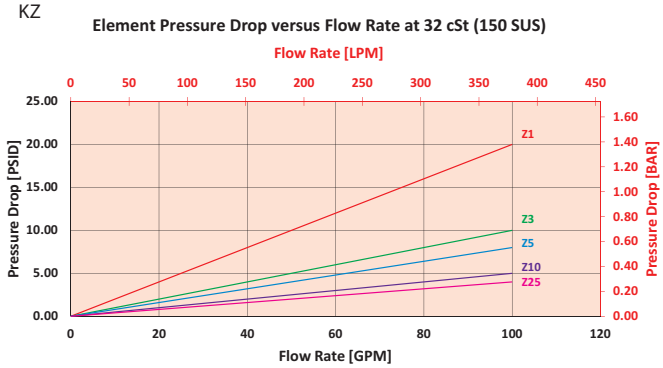

2KZ/KKZ

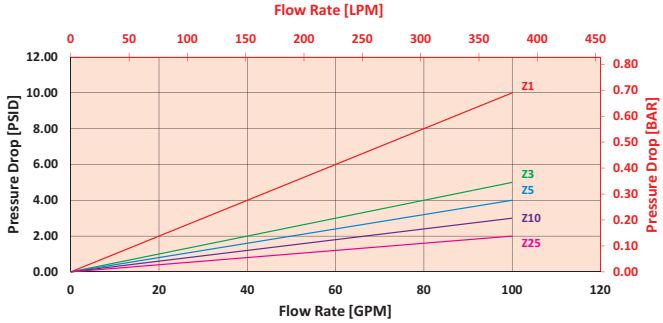

$$\Delta P_{filter} = \Delta P_{housing} + (\Delta P_{element} * V_f)$$

Exercise:

Determine ΔP_{filter} at 70 gpm (265.3 L/min) for KF31KZ10SD5 using 160 SUS (34 cSt) fluid.

Use the housing pressure curve to determine $\Delta P_{housing}$ at 70 gpm. In this case, $\Delta P_{housing}$ is 4 psi (.27 bar) on the graph for the KF3 housing.

Use the element pressure curve to determine $\Delta P_{element}$ at 70 gpm. In this case, $\Delta P_{element}$ is 3 psi (.21 bar) according to the graph for the KZ10 element.

Because the viscosity in this sample is 160 SUS (34 cSt), we determine the Viscosity Factor (V_f) by dividing the Operating Fluid Viscosity with the Standard Viscosity of 150 SUS (32 cSt). To best determine your Operating Fluid Viscosity, please reference the chart in Appendix D.

Finally, the overall filter pressure differential, ΔP_{filter}, is calculated by adding $\Delta P_{housing}$ with the true element pressure differential, ($\Delta P_{element} * V_f$). The $\Delta P_{element}$ from the graph has to be multiplied by the viscosity factor to get the true pressure differential across the element.

Solution:

$\Delta P_{housing}$ = 4 psi [.227 bar] | $\Delta P_{element}$ = 3 psi [.21 bar]

V_f = 160 SUS (34 cSt) / 150 SUS (32 cSt) = 1.1

ΔP_{filter} = 4 psi + (3 psi * 1.1) = 7.7 psi

OR

ΔP_{filter} = .27 bar + (.21 bar * 1.1) = .50 bar

Note:
If your element is not graphed, use the following equation:
$\Delta P_{element}$ = Flow Rate x $\Delta P_{f.}$ Plug this variable into the overall pressure drop equation.

Ele.	ΔP	Ele.	ΔP	Ele.	ΔP
K3	0.25	2K3/ KK3	0.12	3KZ1/ 27KZ1	0.05
K10	0.09	2K10/ KK10	0.05	3KZ3/ 27KZ3	0.03
K25	0.02	2K25/ KK25	0.01	3KZ5/ 27KZ5	0.02
KAS3	0.10	2KAS3/ KKAS3	0.05	3KZ10/ 27KZ10	0.02
KAS5	0.08	2KAS5/ KKAS5	0.04	3KZ25/ 27KZ25	0.01
KAS10	0.05	2KAS10/ KKAS10	0.03	K3K	0.08
KDZ1	0.24	2KDZ1	0.12	3K10	0.03
KDZ3	0.12	2KDZ3	0.06	3K25	0.01
KDZ5	0.10	2KDZ5	0.05	3KAS3/ 27KAS3	0.03
KDZ10	0.06	2KDZ10	0.03	3KAS5/ 27KAS5	0.02
KDZ25	0.04	2KDZ25	0.02	3KAS10/ 27KAS10	0.02
KZW1	0.43	2KZW1	-		
KZW3	0.32	2KZW3/ KKZW3	0.16		
KZW5	0.28	2KZW5/ KKZW5	0.14		
KZW10	0.23	2KZW10/ KKZW10	0.12		
KZW25	0.14	2KZW25/ KKZW25	0.07		

KF3 Return Line Filter

Filter Model Number Selection

Highlighted product eligible for QuickDelivery

How to Build a Valid Model Number for a Schroeder KF3:

BOX 1	BOX 2	BOX 3	BOX 4	BOX 5	BOX 6	BOX 7	BOX 8	BOX 9	BOX 10
KF3 –	–	–	–	–	–	–	–	–	–

Example: NOTE: Only box 10 may contain more than one option

BOX 1	BOX 2	BOX 3	BOX 4	BOX 5	BOX 6	BOX 7	BOX 8	BOX 9	BOX 10
KF3 –	1K –	Z –	10 –	–	–	S –	–	D5 –	= KF31KZ10SD5

BOX 1 — Filter Series

KF3
GKF3 (GeoSeal®)
WKF3 (Water)

BOX 2 — Number & Size of Elements

1K, KK,27K
2K
3K
GeoSeal®
1KG, KKG,27KG
2KG
3KG

BOX 3 — Media Type

Omit =	E media (cellulose)
AS =	Anti-Static Pleat Media
Z =	Excellement® Z-Media® (synthetic)
ZW =	Aqua-Excellement® ZW media
W =	Water Removal media
M =	M Media (reusable metal)
DZ =	DirtCatcher® Excellement® Z-Media®
	Water System Element Options
KM10 =	K size 25 µ M media (reusable metal)
KM25 =	K size 10 µ M media (reusable metal)
KM60 =	K size 60 µ M media (reusable metal)
KM150 =	K size 150 µ M media (reusable metal)
KM260 =	K size 260 µ M media (reusable metal)

BOX 4 — Micron Rating

1 =	1 µ	(Z, ZW and DZ media)
3 =	3 µ	(E, AS, Z, ZW and DZ media)
5 =	5 µ	(AS, Z, ZW and DZ media)
10 =	10 µ	(E, AS, Z, ZW, M and DZ media)
25 =	25 µ	(E, Z, ZW, M and DZ media)
60 =	60 µ	(M media)

BOX 5 — Seal Material

Omit =	Buna N
H =	EPR
V =	Viton®
H.5 =	Skydrol® Compatibility
W =	Buna N with anodized parts

BOX 6 — Magnet Option

Omit = None
M = Magnet

BOX 7 — Porting

P = 1½" NPTF
S = SAE-24
F = 1½" SAE-4-bolt flange Code 61
B = ISO 228 G-1½"

BOX 7 — Bypass Settings

Omit = 30 psi cracking
40 = 40 psi bypass
50 = 50 psi cracking (req. for HF4)
60 = 60 psi bypass

BOX 9 — Dirt Alarm® Options

	Omit = None
Visual	D = Pointer
	D5 = Visual pop-up
Visual with Thermal Lockout	D8 = Visual w/ thermal lockout
Electrical	MS5 = Electrical w/ 12 in. 18 gauge 4-conductor cable
	MS5LC = Low current MS5
	MS10 = Electrical w/ DIN connector (male end only)
	MS10LC = Low current MS10
	MS11 = Electrical w/ 12 ft. 4-conductor wire
	MS12 = Electrical w/ 5 pin Brad Harrison connector (male end only)
	MS12LC = Low current MS12
	MS16 = Electrical w/ weather-packed sealed connector
	MS16LC = Low current MS16
Electrical with Thermal Lockout	MS17LC = Electrical w/ 4 pin Brad Harrison male connector
	MS5T = MS5 (see above) w/ thermal lockout
	MS5LCT = Low current MS5T
	MS10T = MS10 (see above) w/ thermal lockout
	MS10LCT = Low current MS10T
	MS12T = MS12 (see above) w/ thermal lockout
	MS12LCT = Low current MS12T
	MS16T = MS16 (see above) w/ thermal lockout
	MS16LCT = Low current MS16T
	MS17LCT = Low current MS17T
Electrical Visual	MS = Cam operated switch w/ ½" conduit female connection
	MS13 = Supplied w/ threaded connector & light
	MS14 = Supplied w/ 5 pin Brad Harrison connector & light (male end)
Electrical Visual with Thermal Lockout	MS13DCT = MS13 (see above), direct current, w/ thermal lockout
	MS13DCLCT = Low current MS13DCT
	MS14DCT = MS14 (see above), direct current, w/ thermal lockout
	MS14DCLCT = Low current MS14DCT

BOX 10 — Additional Options

Omit =	None
L =	Two ¼" NPTF inlet and outlet test ports
N =	No-Element indicator
G426 =	¾" drain on bottom of housing
G440 =	½" drain on bottom of housing

NOTES:

Box 2. Double and triple stacking of K-size elements can be replaced by single KK and 27K elements, respectively. Number of elements must equal 1 when using KK or 27K elements. ZW media not available in 27K.

Box 3. Replacement element part numbers are identical to contents of Boxes 2, 3, 4, and 5.

Box 5. For options H, W, V, and H.5, all aluminum parts are anodized. H.5 seal designation includes the following: EPR seals, stainless steel wire mesh on elements, and light oil coating on housing exterior. Viton® is a registered trademark of DuPont Dow Elastomers. Skydrol® is a registered trademark of Solutia Inc.

Box 7. For option F, bolt thread depth .63" (16 mm). B porting option supplied with metric mounting holes.

Box 10. Option L not available with MS Dirt Alarm

Return Line Filter with Threaded Bowl

KL3

Model No. of filter in photograph is KL31KZ10F24.

Features and Benefits

- Threaded bowl allows for easier removal and facilitates element changes
- Available with 18LC and K-size elements
- Available with 1½" and 2" porting
- Offered in pipe, SAE straight thread, ISO 228, and flange porting
- Various Dirt Alarm® options
- Available with NPTF inlet and outlet female test ports
- Available with housing drain plug
- G Available with quality-protected GeoSeal® Elements (GKL3)

120 gpm
455 L/min
300 psi
20 bar

Filter Housing Specifications

Flow Rating:	Up to 100 gpm (380 L/min) for 150 SUS (32 cSt) fluids for P24, S24, F24 and B24 porting Up to 120 gpm (455 L/min) for 150 SUS (32 cSt) fluids for P32, S32 and B32 porting
Max. Operating Pressure:	300 psi (20 bar)
Min. Yield Pressure:	1000 psi (70 bar), per NFPA T2.6.1
Rated Fatigue Pressure:	300 psi (20 bar), per NFPA T2.6.1-2005
Temp. Range:	-20°F to 225°F (-29°C to 107°C)
Bypass Setting:	Cracking: 30 psi (2 bar) Full Flow: 68 psi (4.7 bar)
Porting Head: Element Case:	Cast Aluminum Steel
Weight of KL3-18LC: Weight of KL3-1K: Weight of KL3-2K: Weight of KL3-3K:	20.00 lbs. (9.1 kg) 14.75 lbs. (6.7 kg) 18.50 lbs. (8.4 kg) 22.75 lbs. (10.3 kg)
Element Change Clearance:	2.50" (64 mm)

Fluid Compatibility

Type Fluid	Appropriate Schroeder Media
Petroleum Based Fluids	All E media (cellulose), Z-Media® and ASP® media (synthetic)
High Water Content	All Z-Media® and ASP® media (synthetic)
Invert Emulsions	10 and 25 µ Z-Media® (synthetic), 10 µ ASP® media (synthetic)
Water Glycols	3, 5, 10 and 25 µ Z-Media® (synthetic), 3, 5, and 10 µ ASP® media (synthetic)
Phosphate Esters	All Z-Media® with H (EPR) seal designation and all ASP® media (synthetic)

KL3 Return Line Filter with Threaded Bowl

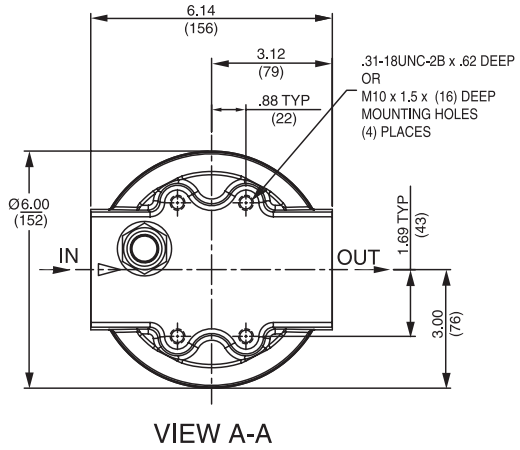

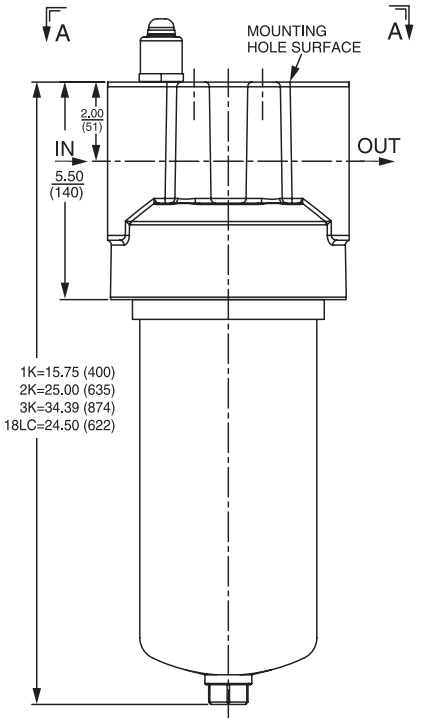

Metric dimensions in ( ).

Element Performance Information & Dirt Holding Capacity

Element	Filtration Ratio Per ISO 4572/NFPA T3.10.8.8 Using automated particle counter (APC) calibrated per ISO 4402			Filtration Ratio per ISO 16889 Using APC calibrated per ISO 11171	
	$ß_x \geq 75$	$ß_x \geq 100$	$ß_x \geq 200$	$ß_x(c) \geq 200$	$ß_x(c) \geq 1000$
KZ1/KKZ1/27KZ1	<1.0	<1.0	<1.0	<4.0	4.2
KZ3/KKZ3/27KZ3	<1.0	<1.0	<2.0	<4.0	4.8
KZ5/KKZ5/27KZ5	2.5	3.0	4.0	4.8	6.3
KZ10/KKZ10/27KZ10	7.4	8.2	10.0	8.0	10.0
KZ25/KKZ25/27KZ25	18.0	20.0	22.5	19.0	24.0
KZW1	N/A	N/A	N/A	<4.0	<4.0
KZW3/KKZW3	N/A	N/A	N/A	4.0	4.8
KZW5/KKZW5	N/A	N/A	N/A	5.1	6.4
KZW10/KKZW10	N/A	N/A	N/A	6.9	8.6
KZW25/KKZW25	N/A	N/A	N/A	15.4	18.5
18LCZ1	<1.0	<1.0	<1.0	<4.0	4.2
18LCZ3	<1.0	<1.0	<2.0	<4.0	4.8
18LCZ5	2.5	3.0	4.0	4.8	6.3
18LCZ10	7.4	8.2	10.0	8.0	10.0
18LCZ25	18.0	20.0	22.5	19.0	24.0

Element	DHC (g)	Element	DHC (g)	Element	DHC (g)	Element	DHC (g)	Element	DHC (g)	Element	DHC (g)
KZ1	112	KKZ1	224	27KZ1	336	KZW1	61			18LCZ1	224
KZ3	115	KKZ3	230	27KZ3	345	KZW3	64	KKZW3	128	18LCZ3	230
KZ5	119	KKZ5	238	27KZ5	357	KZW5	63	KKZW5	126	18LCZ5	238
KZ10	108	KKZ10	216	27KZ10	324	KZW10	57	KKZW10	114	18LCZ10	216
KZ25	93	KKZ25	186	27KZ25	279	KZW25	79	KKZW25	158	18LCZ25	186

Element Collapse Rating: 150 psid (10 bar) for standard elements

Flow Direction: Outside In

Element Nominal Dimensions:
- K: 3.9" (99 mm) O.D. x 9.0" (230 mm) long
- KK: 3.9" (99 mm) O.D. x 18.0" (460 mm) long
- 27K: 3.9" (99 mm) O.D. x 27.0" (690 mm) long
- 18LC: 4.0" (100 mm) O.D. x 18.5" (470 mm) long

Pressure Drop Information

Based on Flow Rate and Viscosity

$\Delta P_{housing}$

KL3 $\Delta P_{housing}$ for fluids with sp gr (specific gravity) = 0.86:

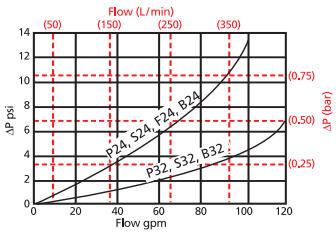

$\Delta P_{element}$

KZ

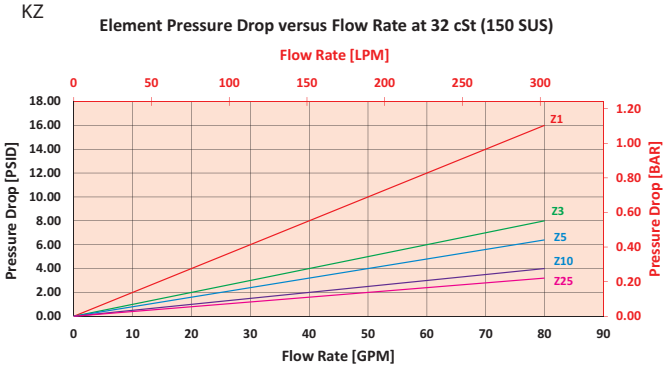

2KZ/KKZ

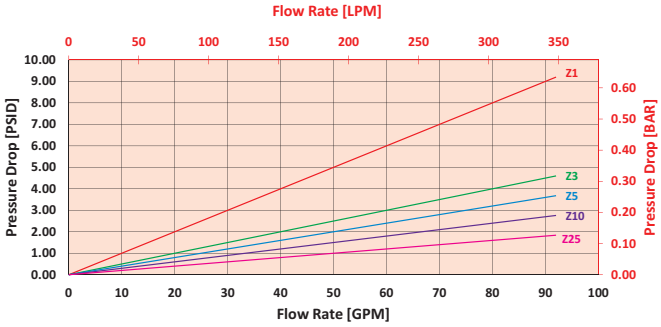

$$\Delta P_{filter} = \Delta P_{housing} + (\Delta P_{element} * V_f)$$

Exercise:

Determine ΔP_{filter} at 70 gpm (265.3 L/min) for KL31KZ10P24D5L using 160 SUS (34 cSt) fluid.

Use the housing pressure curve to determine $\Delta P_{housing}$ at 70 gpm. In this case, $\Delta P_{housing}$ is 7 psi (.48 bar) on the graph for the KL3 housing.

Use the element pressure curve to determine $\Delta P_{element}$ at 70 gpm. In this case, $\Delta P_{element}$ is 3 psi (.21 bar) according to the graph for the KZ10 element.

Because the viscosity in this sample is 160 SUS (34 cSt), we determine the Viscosity Factor (V_f) by dividing the Operating Fluid Viscosity with the Standard Viscosity of 150 SUS (32 cSt). To best determine your Operating Fluid Viscosity, please reference the chart in Appendix D.

Finally, the overall filter pressure differential, ΔP_{filter}, is calculated by adding $\Delta P_{housing}$ with the true element pressure differential, ($\Delta P_{element}$*V_f). The $\Delta P_{element}$ from the graph has to be multiplied by the viscosity factor to get the true pressure differential across the element.

Solution:

$\Delta P_{housing}$ = 7 psi [.48 bar] | $\Delta P_{element}$ = 3 psi [.21 bar]

V_f = 160 SUS (34 cSt) / 150 SUS (32 cSt) = 1.1

ΔP_{filter} = 7 psi + (3 psi * 1.1) = 10.7 psi

OR

ΔP_{filter} = .48 bar + (.21 bar * 1.1) = .71 bar

Note:
If your element is not graphed, use the following equation:
$\Delta P_{element}$ = Flow Rate x ΔP_f Plug this variable into the overall pressure drop equation.

Ele.	ΔP	Ele.	ΔP	Ele.	ΔP
K3	0.25	2K3/ KK3	0.12	18LC3	0.12
K10	0.09	2K10/ KK10	0.05	18L10	0.05
K25	0.02	2K25/ KK25	0.01	18LCZ1	0.10
KAS3	0.10	2KAS3/ KKAS3	0.05	18LCZ3	0.05
KAS5	0.08	2KAS5/ KKAS5	0.04	18LCZ5	0.04
KAS10	0.05	2KAS10/ KKAS10	0.03	18LCZ10	0.03
KZW1	0.43	2KZW1	-	18LCZ25	0.02
KZW3	0.32	2KZW3/ KKZW3	0.16		
KZW5	0.28	2KZW5/ KKZW5	0.14		
KZW10	0.23	2KZW10/ KKZW10	0.12		
KZW25	0.14	2KZW25/ KKZW25	0.07		

KL3 Return Line Filter with Threaded Bowl

Filter Model Number Selection

How to Build a Valid Model Number for a Schroeder KL3:

BOX 1	BOX 2	BOX 3	BOX 4	BOX 5	BOX 6	BOX 7	BOX 8	BOX 9	BOX 10
KL3 –	–	–	–	–	–	–	–		

Example: Option 1 NOTE: One option per box

1	2	3	4	5	6	7	8	9	10
KL3 –	18LC –	Z –	1 –	H –	P24 –	–	D5 –	L –	

Option 2 NOTE: One option per box

1	2	3	4	5	6	7	8	9	10
KL3 –	2K –	Z –	1 –	–	P24 –	–	D5 –	L –	

BOX 1 — Filter Series

- KL3
- GKL3 (GeoSeal®)
- WKL3 (Water)

BOX 2 Option 1 — Size

- 18LC

BOX 3 Option 1 — Media Type

- Omit = E media (cellulose)
- Z = Excellement® Z-Media® (synthetic)

Water System Element Option

- KM10 = 10 µ M media (reusable metal)
- KM25 = 25 µ M media (reusable metal)
- KM60 = 60 µ M media (reusable metal)
- KM150 = 150 µ M media (reusable metal)
- KM260 = 260 µ M media (reusable metal)

BOX 4 Option 1 — Micron Rating

- 1 = 1 µ (Z-Media®)
- 3 = 3 µ (E and Z-Media®)
- 5 = 5 µ (Z-Media®)
- 10 = 10 µ (E and Z-Media®)
- 25 = 25 µ (E and Z-Media®)

BOX 2 Option 2 — Number & Size of Elements

- 1K, KK,27K
- 2K
- 3K

BOX 3 Option 2 — Media Type

- Omit = E media (cellulose)
- Z = Excellement® Z-Media® (synthetic)
- AS = Anti-Static Pleat Media (synthetic)
- ZW = Aqua-Excellement® ZW media
- W = Water Removal media
- M = M media (reusable metal)
- DZ = DirtCatcher® Excellement® Z-Media®

BOX 4 Option 2 — Micron Rating

- 1 = 1 µ (Z, ZW and DZ media)
- 3 = 3 µ (E, AS, Z, ZW and DZ media)
- 5 = 5 µ (AS, Z, ZW and DZ media)
- 10 = 10 µ (E, AS, Z, ZW, M and DZ media)
- 25 = 25 µ (E, Z, ZW, M and DZ media)
- 60 = 60 µ (M media)

BOX 5 — Seal Material

- Omit = Buna N
- H = EPR
- V = Viton®
- H.5 = Skydrol® Compatibility
- W = Buna N

BOX 6 — Porting

- P24 = 1½" NPTF
- S24 = SAE-24
- F24 = 1½" SAE 4-bolt flange Code 61
- B24 = ISO 228 G-1½"
- P32 = 2" NPTF
- S32 = SAE-32
- B32 = SO 228 G-2"

BOX 7 — Bypass Setting

- Omit = 30 psi cracking
- 40 = 40 PSI Bypass
- 50 = 50 psi cracking (req. for HF4)

BOX 8 — Dirt Alarm® Options

	Omit =	None
Visual	D5 =	Visual pop-up
Visual with Thermal Lockout	D8 =	Visual w/ thermal lockout
Electrical	MS5 =	Electrical w/ 12 in. 18 gauge 4-conductor cable
	MS5LC =	Low current MS5
	MS10 =	Electrical w/ DIN connector (male end only)
	MS10LC =	Low current MS10
	MS11 =	Electrical w/ 12 ft. 4-conductor wire
	MS12 =	Electrical w/ 5 pin Brad Harrison connector (male end only)
	MS12LC =	Low current MS12
	MS16 =	Electrical w/ weather-packed sealed connector
	MS16LC =	Low current MS16
	MS17LC =	Electrical w/ 4 pin Brad Harrison male connector
Electrical with Thermal Lockout	MS5T =	MS5 (see above) w/ thermal lockout
	MS5LCT =	Low current MS5T
	MS10T =	MS10 (see above) w/ thermal lockout
	MS10LCT =	Low current MS10T
	MS12T =	MS12 (see above) w/ thermal lockout
	MS12LCT =	Low current MS12T
	MS16T =	MS16 (see above) w/ thermal lockout
	MS16LCT =	Low current MS16T
	MS17LCT =	Low current MS17T
Electrical Visual	MS13 =	Supplied w/ threaded connector & light
	MS14 =	Supplied w/ 5 pin Brad Harrison connector & light (male end)
Electrical Visual with Thermal Lockout	MS13DCT =	MS13 (see above), direct current, w/ thermal lockout
	MS13DCLCT =	Low current MS13DCT
	MS14DCT =	MS14 (see above), direct current, w/ thermal lockout
	MS14DCLCT =	Low current MS14DCT

BOX 9 — Test Port Options

- Omit = None
- L = Two ¼" NPTF inlet and outlet female test ports

BOX 10 — Bowl Drain Option

- Omit = None
- DR = ⅜" drain on bottom of housing

NOTES:

Box 2. Double and triple stacking of K-size elements can be replaced by single KK and 27K elements, respectively. Number of elements must equal 1 when using KK or 27K elements. Replacement element part numbers are identical to contents of Boxes 2, 3, 4, and 5. ZW media not available in 27K length.
Example: 18LCZ3V

Box 5. For options H, W, V, and H.5, all aluminum parts are anodized.H.5 seal designation includes the following: EPR seals, stainless steel wire mesh on elements, and light oil coating on housing exterior. Viton® is a registered trademark of DuPont Dow Elastomers. Skydrol® is a registered trademark of Solutia Inc.

Box 6. B24 and B32 porting options supplied with metric mounting holes. 18LC elements require 2" ports for up to 120 gpm. K size elements require 1½" ports for up to 100 gpm.

Return Line Filter with 2" Ports

LF1

Model No. of filter in photograph is LF118LCZ10P32D.

Features and Benefits

- Offered in pipe, SAE straight thread and ISO 228 porting
- Available in 18" element lengths only
- Various Dirt Alarm® options
- Available with NPTF inlet and outlet female test ports
- Available with 2" porting with "K" size element
- Available with housing drain plug

120 gpm
455 L/min
300 psi
20 bar

Filter Housing Specifications

Flow Rating:	Up to 120 gpm (455 L/min) for 150 SUS (32 cSt) fluids
Max. Operating Pressure:	300 psi (20 bar)
Min. Yield Pressure:	1000 psi (70 bar), per NFPA T2.6.1
Rated Fatigue Pressure:	250 psi (17 bar), per NFPA T2.6.1-2005
Temp. Range:	-20°F to 225°F (-29°C to 107°C)
Bypass Setting:	Cracking: 30 psi (2.1 bar) Full Flow: 60 psi (4.1 bar)
Porting Head: Element Case:	Cast Aluminum Steel
Available Porting:	2" NPTF, 2½-12 SAE Straight
Weight of LF1-18LC:	17.5 lbs. (7.9 kg)
Element Change Clearance:	2.0" (55 mm)

Fluid Compatibility

Type Fluid	Appropriate Schroeder Media
Petroleum Based Fluids	All E media (cellulose) and Z-Media® (synthetic)
High Water Content	All Z-Media (synthetic)
Invert Emulsions	10 and 25 µ Z-Media® (synthetic)
Water Glycols	3, 5, 10 and 25 µ Z-Media® (synthetic)
Phosphate Esters	All Z-Media® (synthetic) with H (EPR) seal designation
Skydrol®	3, 5, 10 and 25 µ Z-Media® (synthetic) with H.5 seal designation (EPR seals and stainless steel wire mesh in element, and light oil coating on housing exterior)

LF1 Return Line Filter with 2" Ports

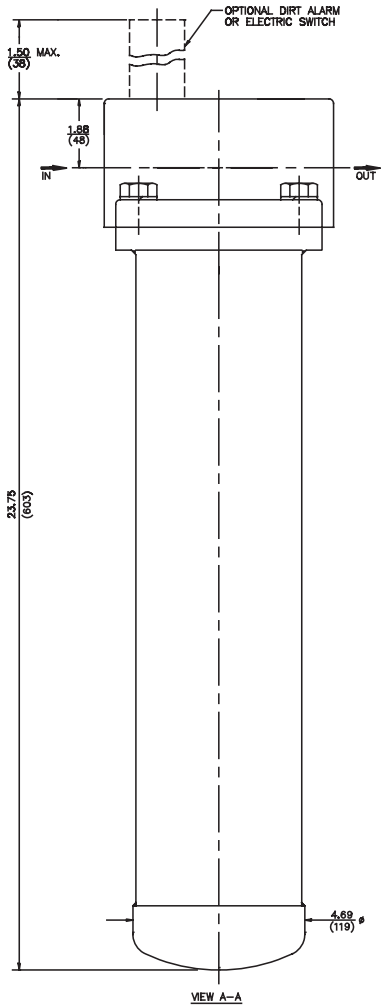

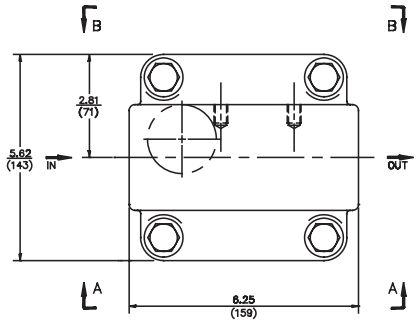

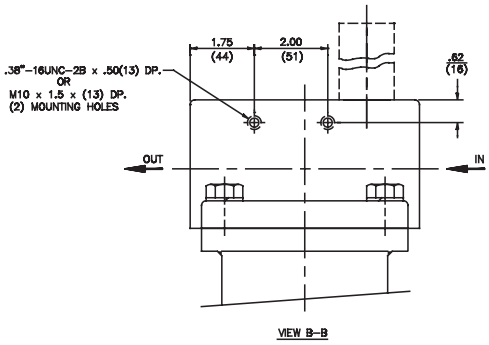

Element Performance Information & Dirt Holding Capacity

Metric dimensions in ( ).

Element	Filtration Ratio Per ISO 4572/NFPA T3.10.8.8 Using automated particle counter (APC) calibrated per ISO 4402			Filtration Ratio per ISO 16889 Using APC calibrated per ISO 11171	
	$ß_x \geq 75$	$ß_x \geq 100$	$ß_x \geq 200$	$ß_x(c) \geq 200$	$ß_x(c) \geq 1000$
18LCZ1	<1.0	<1.0	<1.0	<4.0	4.2
18LCZ3	<1.0	<1.0	<2.0	<4.0	4.8
18LCZ5	2.5	3.0	4.0	4.8	6.3
18LCZ10	7.4	8.2	10.0	8.0	10.0
18LCZ25	18.0	20.0	22.5	19.0	24.0

Element	DHC (gm)
18LCZ1	224
18LCZ3	230
18LCZ5	238
18LCZ10	216
18LCZ25	186

Element Collapse Rating: 150 psid (10 bar)

Flow Direction: Outside In

Element Nominal Dimensions: 4.0" (100 mm) O.D. x 18.5" (470 mm) long

$\Delta P_{housing}$

LF1-2" $\Delta P_{housing}$ for fluids with sp gr (specific gravity) = 0.86:

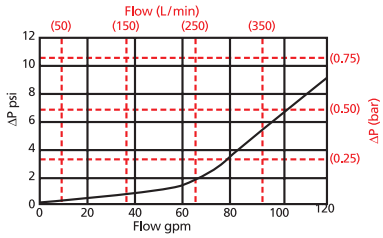

$\Delta P_{element}$

18LCZ

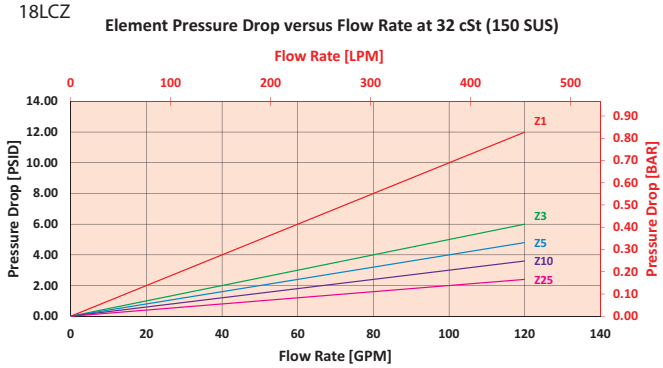

$$\Delta P_{filter} = \Delta P_{housing} + (\Delta P_{element} * V_f)$$

Exercise:

Determine ΔP_{filter} at 70 gpm (265.3 L/min) for LF118LCZ3P32D5 using 160 SUS (34 cSt) fluid.

Use the housing pressure curve to determine $\Delta P_{housing}$ at 70 gpm. In this case, $\Delta P_{housing}$ is 2 psi (.14 bar) on the graph for the LF1 housing.

Use the element pressure curve to determine $\Delta P_{element}$ at 70 gpm. In this case, $\Delta P_{element}$ is 3.5 psi (.24 bar) according to the graph for the 18LCZ3 element.

Because the viscosity in this sample is 160 SUS (34 cSt), we determine the Viscosity Factor (V_f) by dividing the Operating Fluid Viscosity with the Standard Viscosity of 150 SUS (32 cSt). To best determine your Operating Fluid Viscosity, please reference the chart in Appendix D.

Finally, the overall filter pressure differential, ΔP_{filter}, is calculated by adding $\Delta P_{housing}$ with the true element pressure differential, ($\Delta P_{element}$*V_f). The $\Delta P_{element}$ from the graph has to be multiplied by the viscosity factor to get the true pressure differential across the element.

Solution:

$\Delta P_{housing}$ = 2 psi [.14 bar] | $\Delta P_{element}$ = 3.5 psi [.24 bar]

V_f = 160 SUS (34 cSt) / 150 SUS (32 cSt) = 1.1

ΔP_{filter} = 2 psi + (3.5 psi * 1.1) = 5.9 psi

OR

ΔP_{filter} = .14 bar + (.24 bar * 1.1) = .40 bar

LF1 Return Line Filter with 2" Ports

Filter Model Number Selection

How to Build a Valid Model Number for a Schroeder LF1:

BOX 1	BOX 2	BOX 3	BOX 4	BOX 5	BOX 6	BOX 7	BOX 8
LF1 –	–	–	–	–	–	–	–

Example: NOTE: Only box 8 may contain more than one option

BOX 1	BOX 2	BOX 3	BOX 4	BOX 5	BOX 6	BOX 7	BOX 8	
LF1 –	18 –	LC3 –	–	P32 –	–	D5 –	–	= LF118LC3P32D5

BOX 1

Filter Series
LF1
WLF1 (Water)

BOX 2

Length of Element (in)
18

BOX 3

Element Size and Media	
LC3	= LC size 3 µ E media (cellulose)
LC10	= LC size 10 µ E media (cellulose)
LCZ1	= LC size 1 µ Excellement® Z-Media™ (synthetic)
LCZ3	= LC size 3 µ Excellement Z-Media (synthetic)
LCZ5	= LC size 5 µ Excellement Z-Media (synthetic)
LCZ10	= LC size 10 µ Excellement Z-Media (synthetic)
LCZ25	= LC size 25 µ Excellement Z-Media (synthetic)

BOX 4

Seal Material	
Omit	= Buna N
H	= EPR
V	= Viton®
H.5	= Skydrol® Compatibility

BOX 5

Porting	
P32	= 2" NPTF
S32	= SAE-32
B32	= ISO 228 G-2"

BOX 6

Bypass	
Omit	= 30 PSI Bypass
50	= 50 PSI Bypass

BOX 7

Dirt Alarm® Options		
	Omit	= None
Visual	D	= Pointer
	D5	= Visual pop-up
Visual with Thermal Lockout	D8	= Visual w/ thermal lockout
Electrical	MS5	= Electrical w/ 12 in. 18 gauge 4-conductor cable
	MS5LC	= Low current MS5
	MS10	= Electrical w/ DIN connector (male end only)
	MS10LC	= Low current MS10
	MS11	= Electrical w/ 12 ft. 4-conductor wire
	MS12	= Electrical w/ 5 pin Brad Harrison connector (male end only)
	MS12LC	= Low current MS12
	MS16	= Electrical w/ weather-packed sealed connector
	MS16LC	= Low current MS16
	MS17LC	= Electrical w/ 4 pin Brad Harrison male connector
Electrical with Thermal Lockout	MS5T	= MS5 (see above) w/ thermal lockout
	MS5LCT	= Low current MS5T
	MS10T	= MS10 (see above) w/ thermal lockout
	MS10LCT	= Low current MS10T
	MS12T	= MS12 (see above) w/ thermal lockout
	MS12LCT	= Low current MS12T
	MS16T	= MS16 (see above) w/ thermal lockout
	MS16LCT	= Low current MS16T
	MS17LCT	= Low current MS17T
Electrical Visual	MS	= Cam operated switch w/ ½" conduit female connection
	MS13	= Supplied w/ threaded connector & light
	MS14	= Supplied w/ 5 pin Brad Harrison connector & light (male end)
Electrical Visual with Thermal Lockout	MS13DCT	= MS13 (see above), direct current, w/ thermal lockout
	MS13DCLCT	= Low current MS13DCT
	MS14DCT	= MS14 (see above), direct current, w/ thermal lockout
	MS14DCLCT	= Low current MS14DCT

BOX 8

Additional Options	
Omit	= None
L	= Two ¼" NPTF inlet and outlet female test ports
G426	= ¾" drain on bottom of housing
G440	= ½" drain on bottom of housing

NOTES:

Box 2. Replacement element part numbers are a combination of Boxes 2, 3, and 4. Example: 18LCZ3V

Box 4. For options H, V, and H.5, all aluminum parts are anodized. H.5 seal designation includes the following: EPR seals, stainless steel wire mesh on elements, and light oil coating on housing exterior. Viton® is a registered trademark of DuPont Dow Elastomers. Skydrol® is a registered trademark of Solutia Inc.

Box 5. B porting option supplied with metric mounting holes.

Top-Ported Return Line Filter MLF1

Model No. of filter in photograph is MLF14K10PD.

Features and wBenefits

- Equipped with inlet and outlet manifolds
- Meets HF4 automotive standard
- Offered in pipe and flange porting
- Available in 2, 4 or 6 element configurations
- Various Dirt Alarm® options
- Available with NPTF inlet and outlet female test ports
- Available with housing drain plugs
- G Available with quality-protected GeoSeal® Elements (GMLF1)

200 gpm
760 L/min
300 psi
20 bar

Filter Housing Specifications

Flow Rating:	Up to 200 gpm (760 L/min) for 150 SUS (32 cSt) fluids
Max. Operating Pressure:	300 psi (20 bar)
Min. Yield Pressure:	1000 psi (70 bar), per NFPA T2.6.1
Rated Fatigue Pressure:	250 psi (17 bar), per NFPA T2.6.1-2005
Temp. Range:	-20°F to 225°F (-29°C to 107°C)
Bypass Setting:	Cracking: 25 psi (2 bar) Full Flow: 60 psi (4 bar)
Porting Head: Element Case:	Anodized Cast Aluminum Steel
Weight of MLF1-2K: Weight of MLF1-4K: Weight of MLF1-6K:	44.0 lbs. (20.0 kg) 50.0 lbs. (23.0 kg) 58.0 lbs. (26.0 kg)
Element Change Clearance:	2.0" (55 mm)

Fluid Compatibility

Type Fluid	Appropriate Schroeder Media
Petroleum Based Fluids	All E media (cellulose), Z-Media® and ASP® media (synthetic)
High Water Content	All Z-Media® (synthetic)
Invert Emulsions	10 and 25 µ Z-Media® (synthetic)
Water Glycols	3, 5, 10 and 25 µ Z-Media® (synthetic)
Phosphate Esters	All Z-Media® (synthetic) with H (EPR) seal designation and 3 and 10 µ E media (cellulose) with H (EPR) seal designation and all ASP® media (synthetic)
Skydrol®	3, 5, 10 and 25 µ Z-Media® (synthetic) with H.5 seal designation (EPR seals and stainless steel wire mesh in element, and light oil coating on housing exterior and all ASP® media (synthetic).

MLF1 Top-Ported Return Line Filter

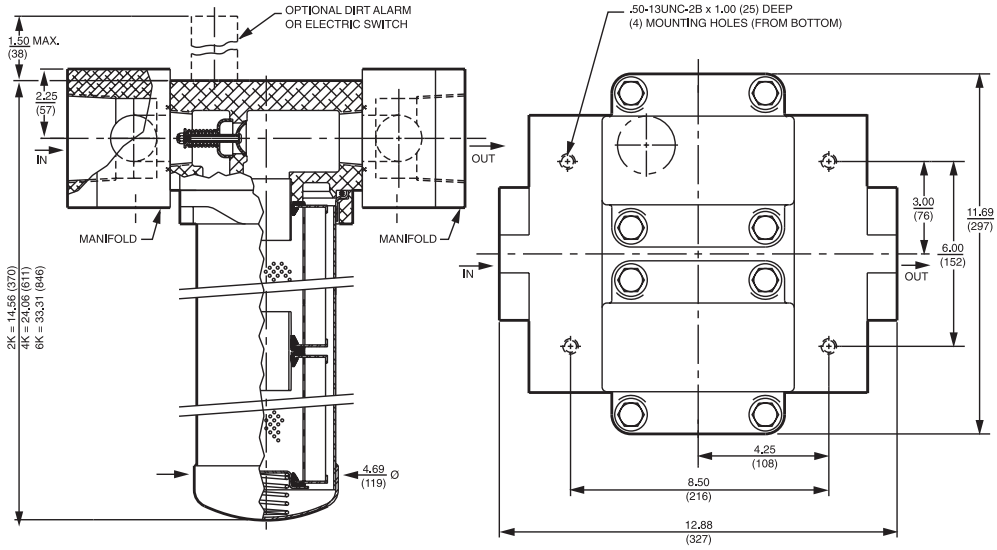

Metric dimensions in ( ).

Element Performance Information & Dirt Holding Capacity

Element	Filtration Ratio Per ISO 4572/NFPA T3.10.8.8 Using automated particle counter (APC) calibrated per ISO 4402			Filtration Ratio per ISO 16889 Using APC calibrated per ISO 11171	
	$ß_x \geq 75$	$ß_x \geq 100$	$ß_x \geq 200$	$ß_{x(c)} \geq 200$	$ß_{x(c)} \geq 1000$
KZ1	<1.0	<1.0	<1.0	<4.0	4.2
KZ3	<1.0	<1.0	<2.0	<4.0	4.8
KZ5	2.5	3.0	4.0	4.8	6.3
KZ10	7.4	8.2	10.0	8.0	10.0
KZ25	18.0	20.0	22.5	19.0	24.0
KZW3	N/A	N/A	N/A	<4.0	4.8
KZW5	N/A	N/A	N/A	5.1	6.4
KZW10	N/A	N/A	N/A	6.9	8.6
KZW25	N/A	N/A	N/A	15.4	18.5

Element	DHC (gm)	Element	DHC (gm)	Element	DHC (gm)	Element	DHC (gm)
2KZ1	224	4KZ1	448	6KZ1	672		
2KZ3	230	4KZ3	460	6KZ3	690	KZW3	64
2KZ5	238	4KZ5	476	6KZ5	714	KZW5	63
2KZ10	216	4KZ10	432	6KZ1	648	KZW10	67
2KZ25	186	4KZ25	372	6KZ25	558	KZW25	79

Element Collapse Rating: 150 psid (10 bar) for standard elements

Flow Direction: Outside In

Element Nominal Dimensions:
K: 3.9" (99 mm) O.D. x 9.0" (230 mm) long
KK: 3.9" (99 mm) O.D. x 18.0" (460 mm) long
27K: 3.9" (99 mm) O.D. x 27.0" (690 mm) long

Pressure Drop Information

Based on Flow Rate and Viscosity

$\Delta P_{housing}$

MLF1 $\Delta P_{housing}$ for fluids with sp gr (specific gravity) = 0.86:

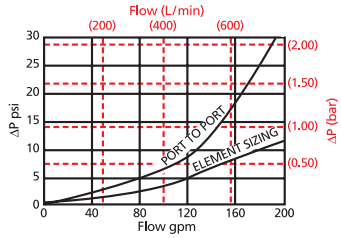

$\Delta P_{element}$

4KZ/2KKZ

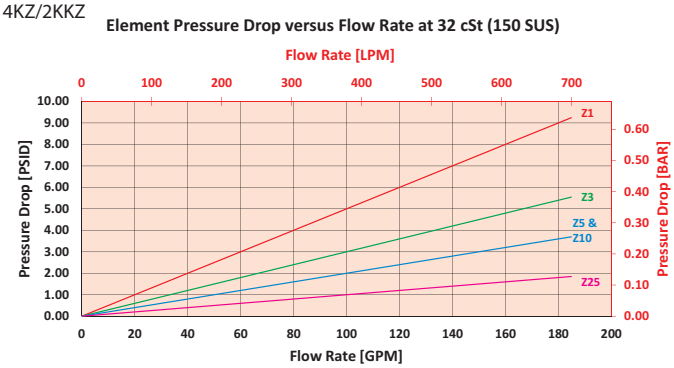

6KZ/2-27KZ

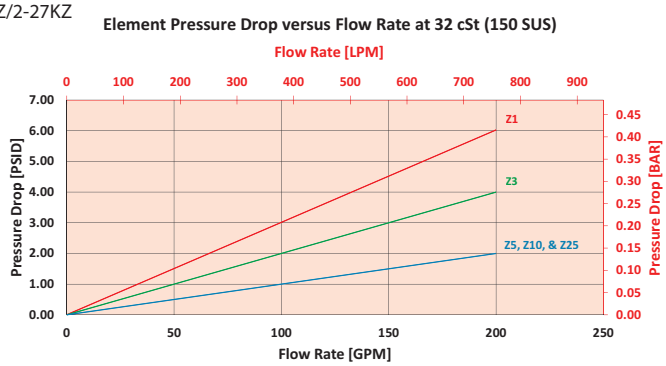

$$\Delta P_{filter} = \Delta P_{housing} + (\Delta P_{element} * V_f)$$

Exercise:

Determine ΔP_{filter} at 150 gpm (568.5 L/min) for MLF14K10PD using 160 SUS (34 cSt) fluid.

Use the housing pressure curve to determine $\Delta P_{housing}$ at 150 gpm. In this case, $\Delta P_{housing}$ is 15 psi (1 bar) on the graph for the MLF1 housing.

Use the element pressure curve to determine $\Delta P_{element}$ at 150 gpm. In this case, $\Delta P_{element}$ is 3 psi (.21 bar) according to the graph for the KKZ10 element.

Because the viscosity in this sample is 160 SUS (34 cSt), we determine the Viscosity Factor (V_f) by dividing the Operating Fluid Viscosity with the Standard Viscosity of 150 SUS (32 cSt). To best determine your Operating Fluid Viscosity, please reference the chart in Appendix D.

Finally, the overall filter pressure differential, ΔP_{filter}, is calculated by adding $\Delta P_{housing}$ with the true element pressure differential, ($\Delta P_{element} * V_f$). The $\Delta P_{element}$ from the graph has to be multiplied by the viscosity factor to get the true pressure differential across the element.

Solution:

$\Delta P_{housing}$ = 15 psi [1 bar] | $\Delta P_{element}$ = 3 psi [.21 bar]

V_f = 160 SUS (34 cSt) / 150 SUS (32 cSt) = 1.1

ΔP_{filter} = 15 psi + (3 psi * 1.1) = 18.3 psi

OR

ΔP_{filter} = 1 bar + (.21 bar * 1.1) = 1.2 bar

Note:
If your element is not graphed, use the following equation:
$\Delta P_{element}$ = Flow Rate x $\Delta P_{f.}$ Plug this variable into the overall pressure drop equation.

Ele.	ΔP	Ele.	ΔP	Ele.	ΔP
2KZ1	0.10	2K3	0.12	4K3/ KK3	0.06
2KZ3	0.05	2K10	0.05	4K10/ KK10	0.02
2KZ5	0.04	2K25	0.01	4K25/ KK25	0.01
2KZ10	0.03	2KAS3	0.05	4KAS3/ KKAS3	0.03
2KZ25	0.02	2KAS5	0.04	4KAS5/ KKAS5	0.02
KZW3	0.32	2KAS10	0.03	4KAS10/ KKAS10	0.02
KZW5	0.28	2KZW3/ KKZW3	0.16	6KAS3/ 27KAS3	0.02
KZW10	0.23	2KZW5/ KKZW5	0.14	6KAS5/ 27KAS5	0.01
KZW25	0.14			6KAS10/ 27KAS10	0.01

MLF1 Top-Ported Return Line Filter

Filter Model Number Selection

How to Build a Valid Model Number for a Schroeder MLF1:

BOX 1	BOX 2	BOX 3	BOX 4	BOX 5	BOX 6	BOX 7	BOX 8	BOX 9	BOX 10
MLF1 –	–	–	–	–	–	–	–	–	–

Example: NOTE: Only box 10 may contain more than one option

BOX 1	BOX 2	BOX 3	BOX 4	BOX 5	BOX 6	BOX 7	BOX 8	BOX 9	BOX 10	
MLF1 –	2K –	–	10 –	–	–	P –	–	D5 –		= MLF12K10PD5

BOX 1 — Filter Series

MLF1
GMLF1 (GeoSeal®)

BOX 2 — Number & Size of Elements

2K, KK, 27K
4 K
6 K
GeoSeal®
2KG, KKG, 27KG
4 KG
6 KG

BOX 3 — Media Type

Omit	= E media (cellulose)
Z	= Excellement® Z-Media® (synthetic)
AS	= Anti-Static Pleat Media (synthetic)
ZW	= Aqua-Excellement™ ZW media
DZ	= DirtCatcher® with Excellement® Z-Media®
W	= W media (water removal)
M	= M media (reusable metal mesh)

BOX 4 — Micron Rating

1	= 1 µ Z, ZW, and DZ media
3	= 3 µ AS,E, Z, ZW, and DZ media
5	= 5 µ AS, Z, ZW, DZ media
10	= 10 µ AS, E, M, Z, ZW, & DZ media
25	= 25 µ E, M, Z, ZW and DZ media
60	= 60 µ M media
150	= 150 µ M media

BOX 5 — Seal Material

Omit	= Buna N
H	= EPR
V	= Viton®
H.5	= Skydrol® Compatibility

BOX 6 — Magnet Option

Omit	= None
M	= Magnet inserts

BOX 7 — Porting

P	= 2½" NPTF
F	= 2½" SAE 4-bolt flange Code 61

BOX 8 — Bypass

Omit	= 25 PSI Bypass
50	= 50 PSI Bypass

BOX 9 — Dirt Alarm® Options

	Omit =	None
Visual	D =	Pointer
	D5 =	Visual pop-up
Visual with Thermal Lockout	D8 =	Visual w/ thermal lockout
Electrical	MS5 =	Electrical w/ 12 in. 18 gauge 4-conductor cable
	MS5LC =	Low current MS5
	MS10 =	Electrical w/ DIN connector (male end only)
	MS10LC =	Low current MS10
	MS11 =	Electrical w/ 12 ft. 4-conductor wire
	MS12 =	Electrical w/ 5 pin Brad Harrison connector (male end only)
	MS12LC =	Low current MS12
	MS16 =	Electrical w/ weather-packed sealed connector
	MS16LC =	Low current MS16
	MS17LC =	Electrical w/ 4 pin Brad Harrison male connector
Electrical with Thermal Lockout	MS5T =	MS5 (see above) w/ thermal lockout
	MS5LCT =	Low current MS5T
	MS10T =	MS10 (see above) w/ thermal lockout
	MS10LCT =	Low current MS10T
	MS12T =	MS12 (see above) w/ thermal lockout
	MS12LCT =	Low current MS12T
	MS16T =	MS16 (see above) w/ thermal lockout
	MS16LCT =	Low current MS16T
	MS17LCT =	Low current MS17T
Electrical Visual	MS =	Cam operated switch w/ ½" conduit female connection
	MS13 =	Supplied w/ threaded connector & light
	MS14 =	Supplied w/ 5 pin Brad Harrison connector & light (male end)
Electrical Visual with Thermal Lockout	MS13DCT =	MS13 (see above), direct current, w/ thermal lockout
	MS13DCLCT =	Low current MS13DCT
	MS14DCT =	MS14 (see above), direct current, w/ thermal lockout
	MS14DCLCT =	Low current MS14DCT

BOX 10 — Additional Options

Omit	= None
L	= Two ¼" NPTF inlet and outlet female test ports
G426	= ¾" drain on bottom of housing
G440	= ½" drain on bottom of housing

NOTES:

Box 2. Double and triple stacking of K-size elements can be replaced by KK and 27K elements, respectively. Number of elements must equal 2 when using KK or 27K elements.

Box 3. Replacement element part numbers are identical to contents of Boxes 2, 3, 4, and 5. K25 is not available with EPR seals.

Box 5. For options H, V, and H.5, all aluminum parts are anodized. H.5 seal designation includes the following: EPR seals, stainless steel wire mesh on elements, and light oil coating on housing exterior. Viton® is a registered trademark of DuPont Dow Elastomers. Skydrol® is a registered trademark of Solutia Inc.

Medium Pressure Filter RLD

Model No. of filter in photograph is RLD25DNZ5S24DW.

Features and Benefits

- Lightweight duplex filter constructed of aluminum
- High chromium content aluminum alloy is water tolerant – anodization is not required for high water-based fluids (HWBF)
- Filter housings are designed to withstand pressure surges as well as high static pressure loads
- Screw-in bowl allows the filter element to be easily removed for replacement or cleaning
- Standard model supplied with drain plugs
- Standard Viton® seal on filter housing
- Filter contains an integrated equalization valve
- Pressure is equalized between filters by raising the change-over lever prior to switching it to the relevant filter side

100 gpm
380 L/min
350 psi
24 bar

Filter Housing Specifications

Flow Rating:	Up to 100 gpm (380 L/min) for 150 SUS (32 cSt) fluids
Max. Operating Pressure:	350 psi (24 bar)
Min. Yield Pressure:	Contact factory
Rated Fatigue Pressure:	350 psi (24 bar)
Temp. Range:	-22°F to 250°F (-30°C to 121°C)
Bypass Setting:	Standard: 102 psi (7 bar) Optional: 43 psi (3.0 bar)
Porting Head: Element Case:	Aluminum Aluminum
Weight of RLD-25DN: Weight of RLD-40DN:	26 lbs. (11.8 kg) 29 lbs. (13.0 kg)
Element Change Clearance:	25DN: 3.5" (89 mm) 40DN: 3.5" (89 mm)

Fluid Compatibility

Type Fluid	Appropriate Schroeder Media
Petroleum Based Fluids	All Z-Media® (synthetic)
High Water Content	All Z-Media® (synthetic)
Invert Emulsions	10 and 25 µ Z-Media® (synthetic)
Water Glycols	3, 6, 10 and 25 µ Z-Media® (synthetic)

Medium Pressure Filter

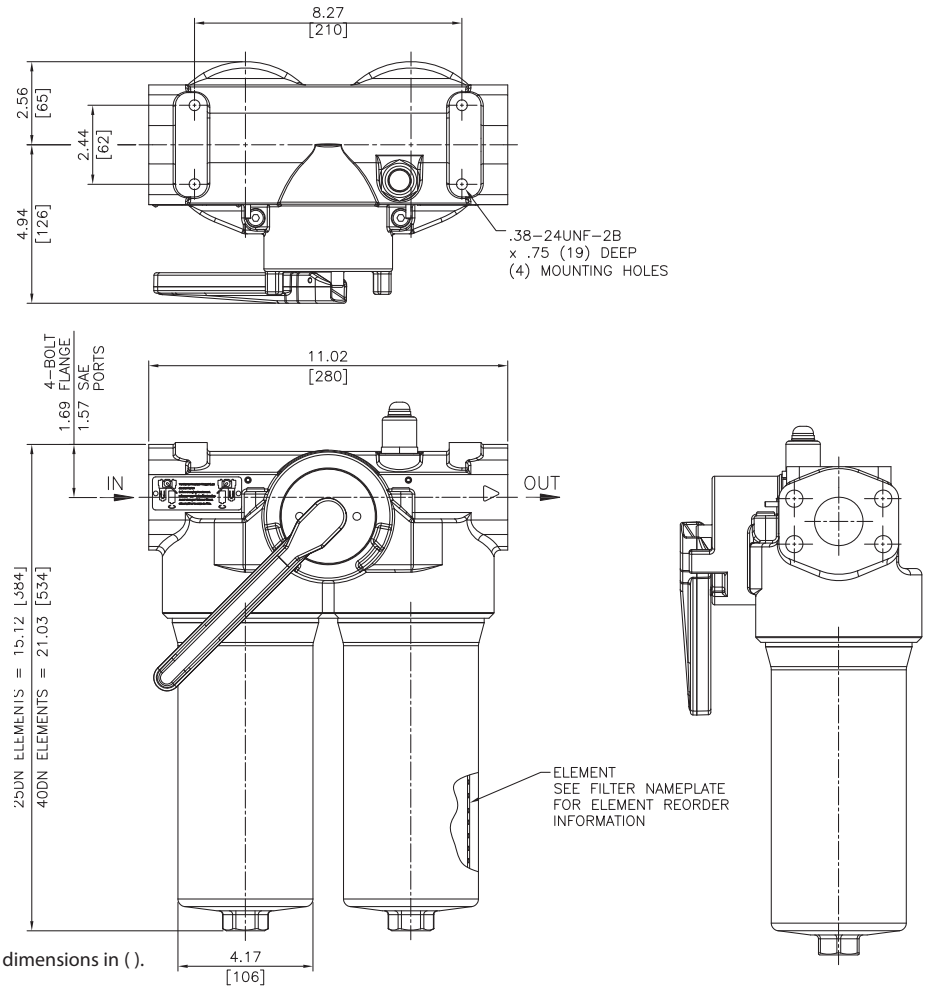

Metric dimensions in ( ).

Element Performance Information & Dirt Holding Capacity

Element	Filtration Ratio Per ISO 4572/NFPA T3.10.8.8 Using automated particle counter (APC) calibrated per ISO 4402			Filtration Ratio per ISO 16889 Using APC calibrated per ISO 11171	
	$ß_x \geq 75$	$ß_x \geq 100$	$ß_x \geq 200$	$ß_{x(c)} \geq 200$	$ß_{x(c)} \geq 1000$
25/40DNZ3	<1.0	<1.0	<2.0	<4.0	4.8
25/40DNZ6	2.5	3.0	4.0	4.8	6.3
25/40DNZ10	7.4	8.2	10.0	8.0	10.0
25/40DNZ25	18.0	20.0	22.5	19.0	24.0

Element	DHC (gm)	Element	DHC (gm)
25DNZ3	57	40DNZ3	105
25DNZ6	62	40DNZ6	115
25DNZ10	52	40DNZ10	104
25DNZ25	48	40DNZ25	94

Element Collapse Rating: 290 psid (20 bar)

Flow Direction: Outside In

Element Nominal Dimensions: 3.0" (75 mm) O.D. x 14.5" (370 mm) long

Pressure Drop Information
Based on Flow Rate and Viscosity

$\Delta P_{housing}$

RLD $\Delta P_{housing}$ for fluids with sp gr (specific gravity) = 0.86:

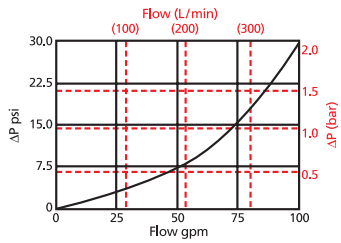

$\Delta P_{element}$

25DNZ

Element Pressure Drop versus Flow Rate at 32 cSt (150 SUS)

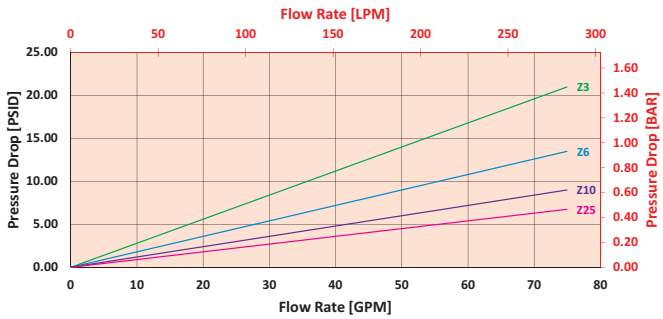

40DNZ

Element Pressure Drop versus Flow Rate at 32 cSt (150 SUS)

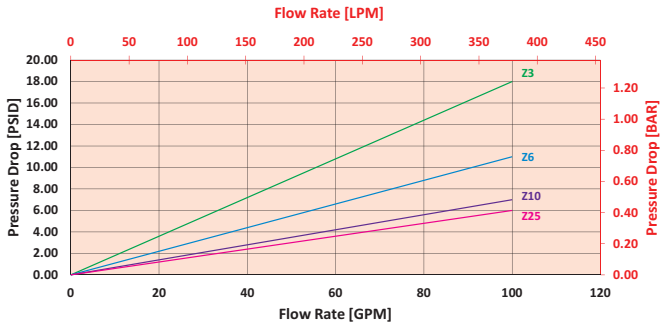

$$\Delta P_{filter} = \Delta P_{housing} + (\Delta P_{element} * V_f)$$

Exercise:

Determine ΔP_{filter} at 70 gpm (265.3 L/min) for RLD25DNZ5VF2440VM using 160 SUS (34 cSt) fluid.

Use the housing pressure curve to determine $\Delta P_{housing}$ at 70 gpm. In this case, $\Delta P_{housing}$ is 14 psi (.96 bar) on the graph for the RLD housing.

Use the element pressure curve to determine $\Delta P_{element}$ at 70 gpm. In this case, $\Delta P_{element}$ is 8 psi (.55 bar) according to the graph for the 25DNZ5V element.

Because the viscosity in this sample is 160 SUS (44 cSt), we determine the Viscosity Factor (V_f) by dividing the Operating Fluid Viscosity with the Standard Viscosity of 150 SUS (32 cSt). To best determine your Operating Fluid Viscosity, please reference the chart in Appendix D.

Finally, the overall filter pressure differential, ΔP_{filter}, is calculated by adding $\Delta P_{housing}$ with the true element pressure differential, ($\Delta P_{element} * V_f$). The $\Delta P_{element}$ from the graph has to be multiplied by the viscosity factor to get the true pressure differential across the element.

Solution:

$\Delta P_{housing}$ = 14 psi [.96 bar] | $\Delta P_{element}$ = 8 psi [.55 bar]

V_f = 160 SUS (34 cSt) / 150 SUS (32 cSt) = 1.1

ΔP_{filter} = 14 psi + (8 psi * 1.1) = 22.8 psi

OR

ΔP_{filter} = .96 bar + (.55 bar * 1.1) = 1.6 bar

RLD Medium Pressure Filter

Filter Model Number Selection

How to Build a Valid Model Number for a Schroeder RLD:

BOX 1		BOX 2		BOX 3		BOX 4		BOX 5		BOX 6		BOX 7
RLD	–		–		–		–		–		–	

Example: NOTE: One option per box

BOX 1		BOX 2		BOX 3		BOX 4		BOX 5		BOX 6		BOX 7	
RLD	–	25	–	DNZ5	–	V	–	F24	–	40	–	VM	= RLD25DNZ5VF2440VM

BOX 1

Filter Series
RLD

BOX 2

Length of Elements (cm)
25
40

BOX 3

Element Size and Media
DNZ5 = DN size 5 µ synthetic media
DNZ10 = DN size 10 µ synthetic media
DNZ25 = DN size 25 µ synthetic media
DNM25 = DN size 25 µ M media (reuseable metal)
DNM50 = DN size 50 µ M media (reuseable metal)
DNM100 = DN size 100 µ M media (reuseable metal)
DNM200 = DN size 200 µ M media (reuseable metal)

BOX 4

Element Seal Material
Omit = Buna N
V = Viton®

BOX 5

Porting
F24 = 1½" SAE 4-bolt flange Code 61
S24 = SAE-24 (1½")

BOX 6

Bypass Setting
Omit = 102 psi cracking
40 = 43 psi cracking

BOX 7

Dirt Alarm® Options		
	Omit =	None
Visual	VM =	Visual pop-up w/manual reset
Electrical	DW =	AC/DC 3-wire (NO or NC)

VM = Manual Reset

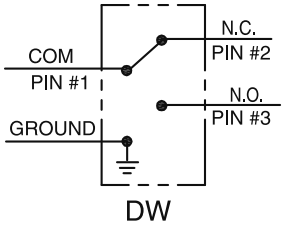

DW = AC/DC 3-wire
(NO or NC)

NOTES:

Box 2. Replacement element part numbers are a combination of Boxes 2, 3 and 4. Example: 40DNZ10

Box 4. Filter housings are supplied with standard Viton seals. Seal designation in Box 4 applies to element only. Viton® is a registered trade-mark of DuPont Dow Elastomers.

Tank-Mounted Return Line Filter

GRTB

Model No. of filter in photograph is GRTB1KBGZ10S.

Features and Benefits

- Patented GeoSeal® Elements
- Various Dirt Alarm® options
- Cost optimized for in-tank applications
- Plastic bowl and cap lower cost and minimize weight
- UV resistant cap
- Same day shipment model available

Part of Schroeder Industries' Energy Sustainability Initiative

100 gpm
380 L/min
100 psi
7 bar

Filter Housing Specifications

Flow Rating:	Up to 100 gpm (380 L/min) for 150 SUS (32 cSt) fluids
Max. Operating Pressure:	100 psi (7 bar)
Min. Yield Pressure:	400 psi (28 bar)
Rated Fatigue Pressure:	145 psi (10 bar), Per NFPA T2.6.1-2005
Temp. Range:	-20°F to 200°F (-29°C to 93°C)
Bypass Setting:	Cracking: 25 psi (1.7 bar) Full Flow: 42 psi (2.9 bar)
Cap & Bowl: Porting Head:	Nylon Aluminum
Weight of GRTB-1K:	5.2 lbs (2.36 kg)
Element Change Clearance:	9.5" (240 mm)

Fluid Compatibility

Type Fluid	Appropriate Schroeder Media
Petroleum Based Fluids	All E media (cellulose), Z-Media® and ASP® media (synthetic)
Invert Emulsions	10 and 25 µ Z-Media® and 10 µ ASP® media (synthetic)

Tank-Mounted Return Line Filter

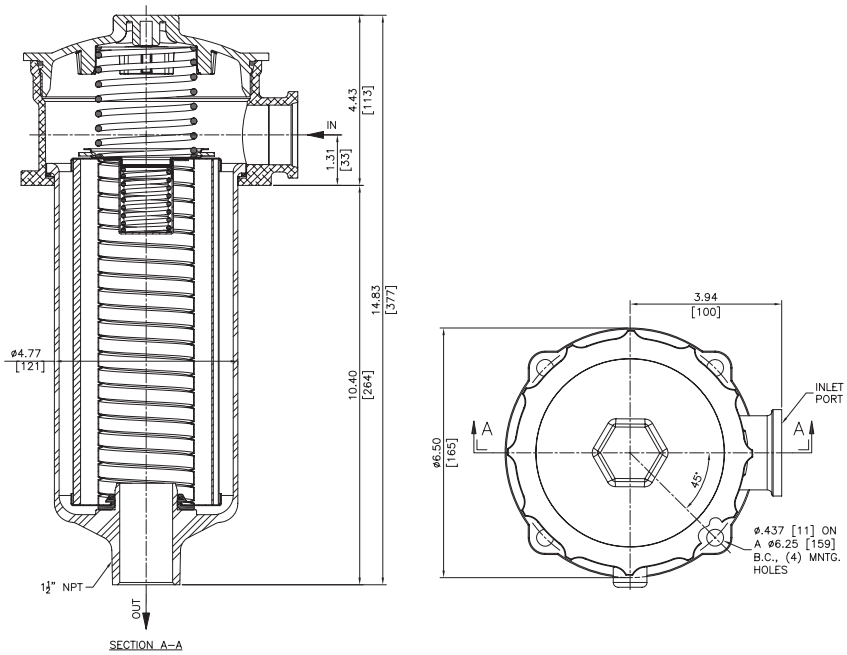

Metric dimensions in ( ).

Element Performance Information & Dirt Holding Capacity

Element	Filtration Ratio Per ISO 4572/NFPA T3.10.8.8 Using automated particle counter (APC) calibrated per ISO 4402			Filtration Ratio per ISO 16889 Using APC calibrated per ISO 11171	
	$ß_x \geq 75$	$ß_x \geq 100$	$ß_x \geq 200$	$ß_x(c) \geq 200$	$ß_x(c) \geq 1000$
KBGZ1	<1.0	<1.0	<1.0	<4.0	4.2
KBGZ3	<1.0	<1.0	<2.0	<4.0	4.8
KBGZ5	2.5	3.0	4.0	4.8	6.3
KBGZ10	7.4	8.2	10.0	8.0	10.0
KBGZ25	18.0	20.0	22.5	19.0	24.0

Element	DHC (gm)
KBGZ1	112
KBGZ3	115
KBGZ5	119
KBGZ10	108
KBGZ25	93

Element Collapse Rating: 150 psid (10 bar) for standard elements

Flow Direction: Outside In

Element Nominal Dimensions: K: 3.9" (99 mm) O.D. x 9.0" (230 mm) long

Pressure Drop Information

Based on Flow Rate and Viscosity

$\Delta P_{housing}$

GRTB $\Delta P_{housing}$ for fluids with sp gr (specific gravity) = 0.86:

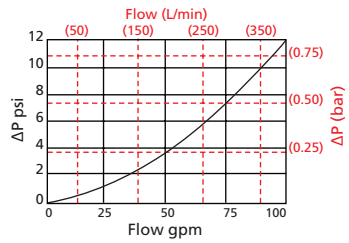

$\Delta P_{element}$

KBGZ

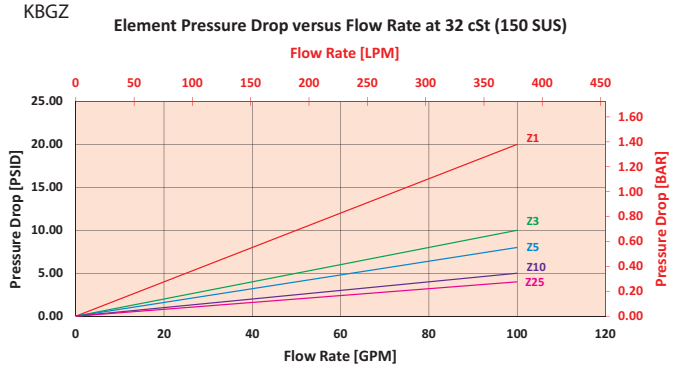

$$\Delta P_{filter} = \Delta P_{housing} + (\Delta P_{element} * V_f)$$

Exercise:

Determine ΔP_{filter} at 80 gpm (303.2 L/min) for GRTB1KBGZ10PY2 using 160 SUS (34 cSt) fluid.

Use the housing pressure curve to determine $\Delta P_{housing}$ at 80 gpm. In this case, $\Delta P_{housing}$ is 8 psi (.55 bar) on the graph for the GRTB housing.

Use the element pressure curve to determine $\Delta P_{element}$ at 80 gpm. In this case, $\Delta P_{element}$ is 4 psi (.27 bar) according to the graph for the KBGZ10 element.

Because the viscosity in this sample is 160 SUS (34 cSt), we determine the Viscosity Factor (V_f) by dividing the Operating Fluid Viscosity with the Standard Viscosity of 150 SUS (32 cSt). To best determine your Operating Fluid Viscosity, please reference the chart in Appendix D.

Finally, the overall filter pressure differential, ΔP_{filter}, is calculated by adding $\Delta P_{housing}$ with the true element pressure differential, ($\Delta P_{element}$*V_f). The $\Delta P_{element}$ from the graph has to be multiplied by the viscosity factor to get the true pressure differential across the element.

Solution:

$\Delta P_{housing}$ = 8 psi [.55 bar] | $\Delta P_{element}$ = 4 psi [.27 bar]

V_f = 160 SUS (34 cSt) / 150 SUS (32 cSt) = 1.1

ΔP_{filter} = 8 psi + (4 psi * 1.1) = 12.4 psi

OR

ΔP_{filter} = .55 bar + (.27 bar * 1.1) = .85 bar

GRTB Tank-Mounted Return Line Filter

Filter Model Number Selection

Highlighted product eligible for QuickDelivery

How to Build a Valid Model Number for a Schroeder GRTB:

BOX 1	BOX 2	BOX 3	BOX 4	BOX 5	BOX 6	BOX 7	BOX 8
GRTB –	–	–	–	–	–	–	–

Example: NOTE: One option per box

BOX 1	BOX 2	BOX 3	BOX 4	BOX 5	BOX 6	BOX 7	BOX 8	
GRTB –	1KBG –	Z –	10 –	–	P –	–	Y2	= GRTB1KBGZ10PY2

BOX 1

Filter Series
GRTB (GeoSeal®)
RTB

BOX 2

Element Size
1KBG (GeoSeal®)
1KB

BOX 3

Media Type
Omit = E-Media (cellulose)
Z = Excellement® Z-Media®

BOX 4

Micron Rating
1 = 1 µ Z-Media®
3 = 3 µ Z-Media®
5 = 5 µ Z-Media®
10 = 10 µ E, and Z-Media®
25 = 25 µ E, and Z-Media®

BOX 5

Seals
Omit = Buna N

BOX 6

Port
P = 1.25" NPT
S = SAE-20
B = ISO 228 G-1.25"

BOX 7

Outlet Porting Options
Omit = 1½" NPT male
C = Check valve
D = Diffuser
CD = Check valve & diffuser
T = 13" Tube extension

BOX 8

Indicator	
Omit =	None
Y2 =	Back-mounted tricolor gauge
ES =	Electric switch
ES1 =	Heavy-duty electric switch with conduit connections
ES2 =	Electrical Switch with Deutsch Connector
ES3 =	Electric Switch with DIN 43650

NOTES:

Box 3. Use boxes 2, 3, 4 ,and 5 to build a replacement element part number.

MiniMiser™ Tank-Mounted Filter

MTA

15 gpm
55 L/min
100 psi
7 bar

Model No. of filter in photograph is MTA3TAZ10P8.

Features and Benefits

- Low pressure tank-mounted filter
- Compact size minimizes space requirements
- Minimizer is cost-effective alternative to spin-on filters
- Special filter element design provides aftermarket benefits

Filter Housing Specifications

Flow Rating:	Up to 15 gpm (55 L/min) for 150 SUS (32 cSt) fluids
Max. Operating Pressure:	100 psi (7 bar)
Min. Yield Pressure:	269 psi (18 bar), per NFPA T2.6.1
Rated Fatigue Pressure:	Contact factory
Temp. Range:	-20°F to 225°F (-29°C to 107°C)
Bypass Setting:	Cracking: 25 psi (2 bar) Full Flow: 48 psi (3.3 bar)
Porting Head & Cap: Element Case:	Die Cast Aluminum Glass Filled Nylon
Weight of MTA-3:	1.0 lbs. (0.5 kg)
Element Change Clearance:	3.0" (76 mm)

Fluid Compatibility

Type Fluid	Appropriate Schroeder Media
Petroleum Based Fluids	All E media (cellulose) and Z-Media® (synthetic)

MiniMiser™ Tank-Mounted Filter

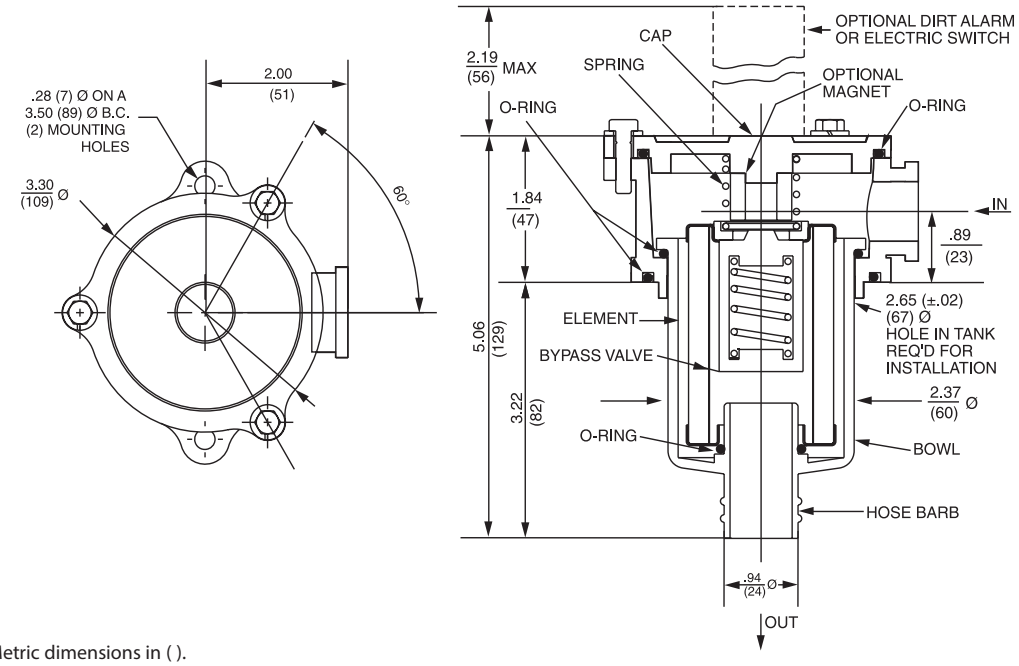

Metric dimensions in ( ).

Element Performance Information & Dirt Holding Capacity

Element	Filtration Ratio Per ISO 4572/NFPA T3.10.8.8 Using automated particle counter (APC) calibrated per ISO 4402			Filtration Ratio per ISO 16889 Using APC calibrated per ISO 11171	
	$ß_x \geq 75$	$ß_x \geq 100$	$ß_x \geq 200$	$ß_{x(c)} \geq 200$	$ß_{x(c)} \geq 1000$
3TAZ3	<1.0	<1.0	<2.0	<4.0	4.8
3TAZ5	2.5	3.0	4.0	4.8	6.3
3TAZ10	7.4	8.2	10.0	8.0	10.0
3TAZ25	18.0	20.0	22.5	19.0	24.0

Element	DHC (gm)
3TAZ3	4
3TAZ5	6
3TAZ10	4
3TAZ25	4

Element Collapse Rating: 150 psid (10 bar)

Flow Direction: Outside In

Element Nominal Dimensions: 2.0" (51 mm) O.D. x 3.0" (76 mm) long

Pressure Drop Information

Based on Flow Rate and Viscosity

$\Delta P_{housing}$

MTA $\Delta P_{housing}$ for fluids with sp gr (specific gravity) = 0.86:

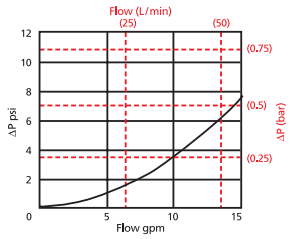

$\Delta P_{element}$

3TAZ

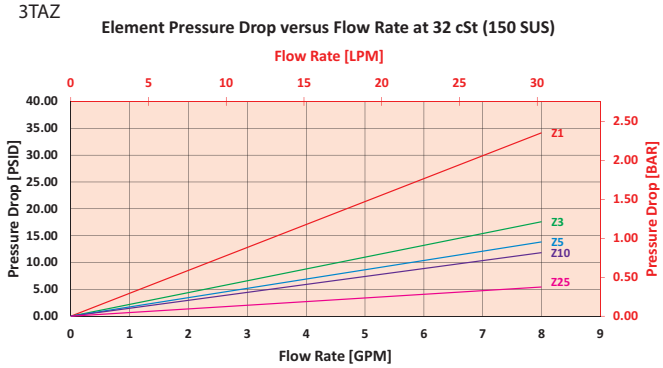

$$\Delta P_{filter} = \Delta P_{housing} + (\Delta P_{element} * V_f)$$

Exercise:

Determine ΔP_{filter} at 10 gpm (37.9 L/min) for MTA3TAZ25P8Y5 using 160 SUS (34 cSt) fluid.

Use the housing pressure curve to determine $\Delta P_{housing}$ at 10 gpm. In this case, $\Delta P_{housing}$ is 4 psi (.27 bar) on the graph for the MTA housing.

Use the element pressure curve to determine $\Delta P_{element}$ at 10 gpm. In this case, $\Delta P_{element}$ is 7 psi (.48 bar) according to the graph for the 3TAZ25 element.

Because the viscosity in this sample is 160 SUS (34 cSt), we determine the Viscosity Factor (V_f) by dividing the Operating Fluid Viscosity with the Standard Viscosity of 150 SUS (32 cSt). To best determine your Operating Fluid Viscosity, please reference the chart in Appendix D.

Finally, the overall filter pressure differential, ΔP_{filter}, is calculated by adding $\Delta P_{housing}$ with the true element pressure differential, ($\Delta P_{element} * V_f$). The $\Delta P_{element}$ from the graph has to be multiplied by the viscosity factor to get the true pressure differential across the element.

Solution:

$\Delta P_{housing}$ = 4 psi [.27 bar] | $\Delta P_{element}$ = 7 psi [.48 bar]

V_f = 160 SUS (34 cSt) / 150 SUS (32 cSt) = 1.1

ΔP_{filter} = 4 psi + (7 psi * 1.1) = 11.7 psi

OR

ΔP_{filter} = .27 bar + (.48 bar * 1.1) = .80 bar

Note:
If your element is not graphed, use the following equation:
$\Delta P_{element}$ = Flow Rate x $\Delta P_{f.}$ Plug this variable into the overall pressure drop equation.

Ele.	ΔP
3TA10	1.40
3TA25	0.33

MiniMiser™ Tank-Mounted Filter

Filter Model Number Selection

How to Build a Valid Model Number for a Schroeder MTA:

BOX 1		BOX 2		BOX 3		BOX 4		BOX 5
MTA	–		–		–		–	

Example: NOTE: One option per box

BOX 1		BOX 2		BOX 3		BOX 4		BOX 5	
MTA	–	3	–	TA25	–	P8	–	Y5	= MTA3TA25P8Y5

BOX 1

Filter Series
MTA

BOX 2

Element Length (in)
3

BOX 3

Element Size and Media
TA10 = TA size 10 µ E media (cellulose)
TA25 = TA size 25 µ E media (cellulose)
TAZ1 = TA size 1 µ Excellement® Z-Media® (synthetic)
TAZ3 = TA size 3 µ Excellement® Z-Media® (synthetic)
TAZ5 = TA size 5 µ Excellement® Z-Media® (synthetic)
TAZ10 = TA size 10 µ Excellement® Z-Media® (synthetic)
TAZ25 = TA size 25 µ Excellement® Z-Media® (synthetic)

BOX 4

Porting Options
P8 = ½" NPTF
S8 = SAE-8

BOX 5

Dirt Alarm® Options	
	Omit = None
Visual	Y2C = Bottom-mounted gauge in cap Y5 = Back-mounted gauge in cap
Electrical	ESC = Electric pressure switch (2 terminals)

MiniMiser™ Tank-Mounted Filter

MTB

Model No. of filter in photograph is MTB5TBZ5P16H.

Features and Benefits

- Low pressure tank-mounted filter
- Compact size minimizes space requirements
- Minimizer is cost-effective alternative to spin-on filters
- Special filter element design provides aftermarket benefits

35 gpm
135 L/min
100 psi
7 bar

Filter Housing Specifications

Flow Rating:	Up to 25 gpm (95 L/min) for 150 SUS (32 cSt) fluids–MTB-3 Up to 35 gpm (135 L/min) for 150 SUS (32 cSt) fluids–MTB-5
Max. Operating Pressure:	100 psi (7 bar)
Min. Yield Pressure:	229 psi (15 bar), per NFPA T2.6.1
Rated Fatigue Pressure:	Contact factory
Temp. Range:	-20°F to 225°F (-29°C to 107°C)
Bypass Setting:	Cracking: 25 psi (2 bar) Full Flow: 51 psi (3.5 bar)
Porting Head & Cap: Element Case:	Die Cast Aluminum Glass Filled Nylon
Weight of MTB-3: Weight of MTB-5:	1.8 lbs. (0.8 kg) 2.1 lbs. (1.0 kg)
Element Change Clearance:	3.0" (76 mm) MTB-3 5.0" (127 mm) MTB-5

Fluid Compatibility

Type Fluid	Appropriate Schroeder Media
Petroleum Based Fluids	All E media (cellulose) and Z-Media® (synthetic)

MTB MiniMiser™ Tank-Mounted Filter

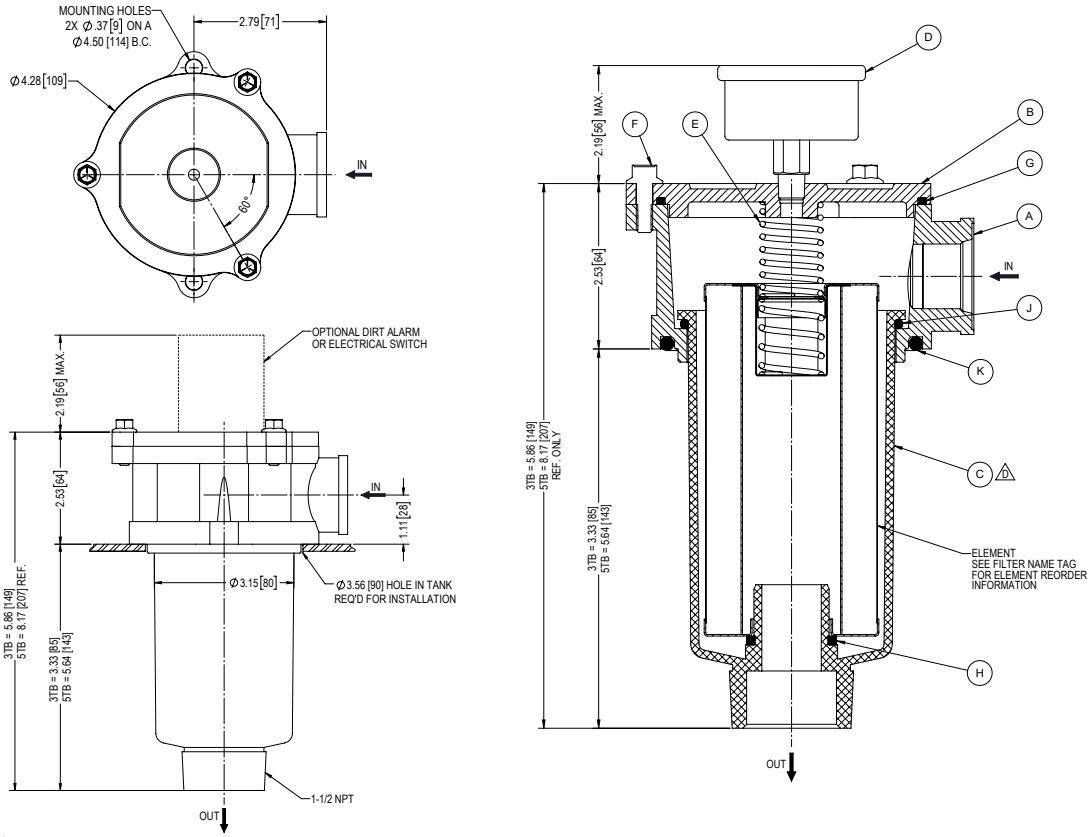

Metric dimensions in ( ).

Element Performance Information & Dirt Holding Capacity

Element	Filtration Ratio Per ISO 4572/NFPA T3.10.8.8 Using automated particle counter (APC) calibrated per ISO 4402			Filtration Ratio per ISO 16889 Using APC calibrated per ISO 11171	
	$ß_x \geq 75$	$ß_x \geq 100$	$ß_x \geq 200$	$ß_x(c) \geq 200$	$ß_x(c) \geq 1000$
3TBZ3	<1.0	<1.0	<2.0	<4.0	4.8
3TBZ5	2.5	3.0	4.0	4.8	6.3
3TBZ10	7.4	8.2	10.0	8.0	10.0
3TBZ25	18.0	20.0	22.5	19.0	24.0
5TBZ3	<1.0	<1.0	<2.0	4.7	5.8
5TBZ5	2.5	3.0	4.0	5.6	7.2
5TBZ10	7.4	8.2	10.0	8.0	9.8
5TBZ25	18.0	20.0	22.5	19.0	24.0

Element	DHC (gm)
3TBZ3	11
3TBZ5	12
3TBZ10	11
3TBZ25	11
5TBZ3	18
5TBZ5	21
5TBZ10	17
5TBZ25	18

Element Collapse Rating: 150 psid (10 bar)

Flow Direction: Outside In

Element Nominal Dimensions: 3TB: 3.0" (76 mm) O.D. x 3.0" (76 mm) long
5TB: 3.0" (76 mm) O.D. x 5.0" (127 mm) long

Pressure Drop Information

Based on Flow Rate and Viscosity

$\Delta P_{housing}$

MTB $\Delta P_{housing}$ for fluids with sp gr (specific gravity) = 0.86:

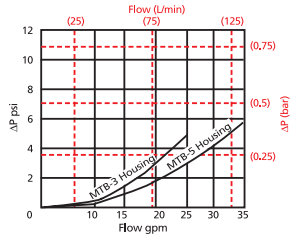

$\Delta P_{element}$

3TBZ

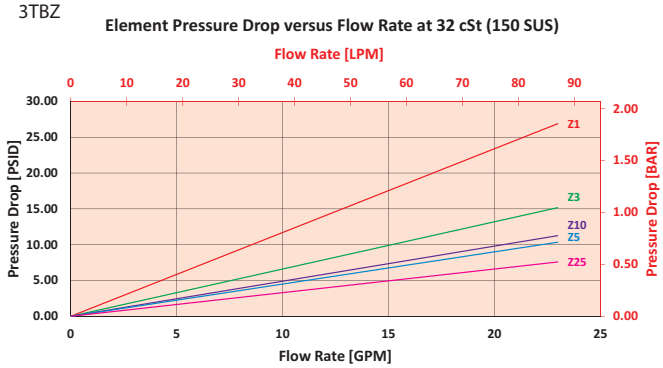

5TBZ

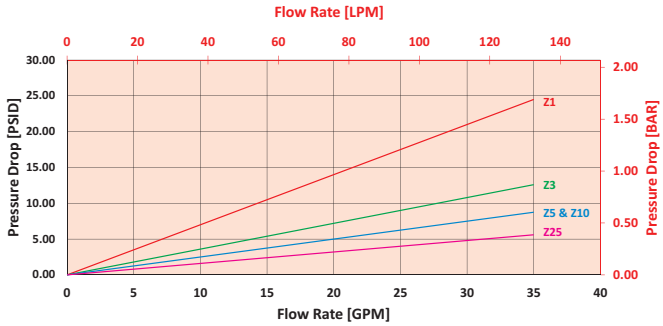

$$\Delta P_{filter} = \Delta P_{housing} + (\Delta P_{element} * V_f)$$

Exercise:

Determine ΔP_{filter} at 10 gpm (37.9 L/min) for MTB3TBZ25P12Y5 using 160 SUS (34 cSt) fluid.

Use the housing pressure curve to determine $\Delta P_{housing}$ at 10 gpm. In this case, $\Delta P_{housing}$ is 1 psi (.07 bar) on the graph for the MTB housing.

Use the element pressure curve to determine $\Delta P_{element}$ at 10 gpm. In this case, $\Delta P_{element}$ is 3 psi (.21 bar) according to the graph for the 3TBZ25 element.

Because the viscosity in this sample is 160 SUS (34 cSt), we determine the Viscosity Factor (V_f) by dividing the Operating Fluid Viscosity with the Standard Viscosity of 150 SUS (32 cSt). To best determine your Operating Fluid Viscosity, please reference the chart in Appendix D.

Finally, the overall filter pressure differential, ΔP_{filter}, is calculated by adding $\Delta P_{housing}$ with the true element pressure differential, ($\Delta P_{element} * V_f$). The $\Delta P_{element}$ from the graph has to be multiplied by the viscosity factor to get the true pressure differential across the element.

Solution:

$\Delta P_{housing}$ = 1 psi [.07 bar] | $\Delta P_{element}$ = 3 psi [.21 bar]

V_f = 160 SUS (34 cSt) / 150 SUS (32 cSt) = 1.1

ΔP_{filter} = 1 psi + (3 psi * 1.1) = 4.3 psi

OR

ΔP_{filter} = .07 bar + (.21 bar * 1.1) = .30 bar

Note:
If your element is not graphed, use the following equation:
$\Delta P_{element}$ = Flow Rate x $\Delta P_{f.}$ Plug this variable into the overall pressure drop equation.

Ele.	ΔP	Ele.	ΔP
3TB10	1.40	5TB10	0.40
3TB25	0.10	5TB25	0.08

MiniMiser™ Tank-Mounted Filter

Filter Model Number Selection

How to Build a Valid Model Number for a Schroeder MTB:

BOX 1		BOX 2		BOX 3		BOX 4		BOX 5		BOX 6
MTB	–		–		–		–		–	

Example: NOTE: One option per box

BOX 1		BOX 2		BOX 3		BOX 4		BOX 5		BOX 6	
MTB	–	3	–	TB25	–	P12	–	H	–	Y5	= MTB3TB25P12HY5

BOX 1

Filter Series
MTB

BOX 2

Element Length (in)
3
5

BOX 3

Element Size and Media
TB10 = T size 10 µ E media (cellulose)
TB25 = T size 25 µ E media (cellulose)
TBZ3 = T size 3 µ Excellement® Z-Media® (synthetic)
TBZ5 = T size 5 µ Excellement® Z-Media® (synthetic)
TBZ10 = T size 10 µ Excellement® Z-Media® (synthetic)
TBZ25 = T size 25 µ Excellement® Z-Media® (synthetic)

BOX 4

Porting Options
P12 = ¾" NPTF
P16 = 1" NPTF
S12 = SAE-12
S16 = SAE-16
B12 = ISO 228 G-¾"
B16 = ISO 228 G-1"

BOX 5

Outlet Options	
Omit	= 1.5" NPT Outlet
H	= Hose Barb Outlet
D	= Diffuser

BOX 6

Dirt Alarm® Options		
	Omit =	None
Visual	Y2C =	Bottom-mounted gauge in cap
	Y5 =	Back-mounted gauge in cap
Electrical	ESC =	Electric pressure switch (2 terminals)

Tank-Mounted Filter ZT

Model No. of filter in photograph is ZT8ZZ10PPESAB.

Features and Benefits

- Low pressure tank-mounted filter
- Available with dual inlet porting
- Offered in pipe, SAE straight thread and ISO 228 porting
- Various Dirt Alarm® options
- Optional PAB1 breather
- Available with quality-protected GeoSeal® Elements (GZT)
- G Same day shipment model available

Part of Schroeder Industries' Energy Sustainability Initiative

40 gpm
150 L/min
100 psi
7 bar

Filter Housing Specifications

Flow Rating:	Up to 40 gpm (150 L/min) for 150 SUS (32 cSt) fluids
Max. Operating Pressure:	100 psi (7 bar)
Min. Yield Pressure:	300 psi (21 bar), per NFPA T2.6.1
Rated Fatigue Pressure:	90 psi (6 bar), per NFPA T2.6.1-R1-2005
Temp. Range:	-20°F to 225°F (-29°C to 107°C)
Bypass Setting:	Cracking: 25 psi (1.7 bar) Full Flow: 39 psi (2.7 bar)
Cap & Bowl:	Nylon
Porting Head:	Aluminum
Weight of ZT-8Z:	3.3 lbs. (1.49 kg)
Element Change Clearance:	10.0" (254 mm)

Fluid Compatibility

Type Fluid	Appropriate Schroeder Media
Petroleum Based Fluids	All E media (cellulose) and Z-Media® (synthetic)
High Water Content	All Z-Media (synthetic)
Invert Emulsions	10 and 25 µ Z-Media® (synthetic)
Water Glycols	3, 5, 10 and 25 µ Z-Media® (synthetic)
Phosphate Esters	All Z-Media® (synthetic) with H (EPR) seal designation

Tank-Mounted Filter

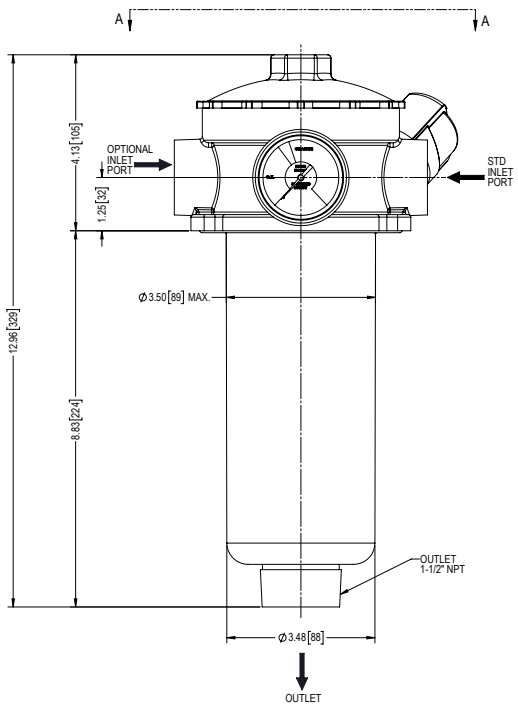

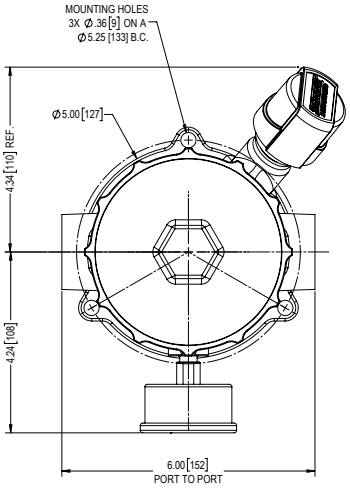

Metric dimensions in ( ).

Element Performance Information & Dirt Holding Capacity

Element	Filtration Ratio Per ISO 4572/NFPA T3.10.8.8 Using automated particle counter (APC) calibrated per ISO 4402			Filtration Ratio wrt ISO 16889 Using APC calibrated per ISO 11171	
	$ß_x \geq 75$	$ß_x \geq 100$	$ß_x \geq 200$	$ß_x^{(c)} \geq 200$	$ß_x^{(c)} \geq 1000$
8Z3	6.8	7.5	10.0	N/A	N/A
8Z10	15.5	16.2	18.0	N/A	N/A
8ZZ1	<1.0	<1.0	<1.0	<4.0	4.2
8ZZ3	<1.0	<1.0	<2.0	<4.0	4.8
8ZZ5	2.5	3.0	4.0	4.8	6.3
8ZZ10	7.4	8.2	10.0	8.0	10.0
8ZZ25	18.0	20.0	22.5	19.0	24.0

Element	DHC (gm)
8Z3	39
8Z10	32
8ZZ1	51
8ZZ3	52
8ZZ5	59
8ZZ10	55
8ZZ25	77

Element Collapse Rating: 150 psid (10 bar)

Flow Direction: Outside In

Element Nominal Dimensions: 3.2" (81 mm) O.D. x 9.25" (235 mm) long

Pressure Drop Information

Based on Flow Rate and Viscosity

$\Delta P_{housing}$

ZT $\Delta P_{housing}$ for fluids with sp gr (specific gravity) = 0.86:

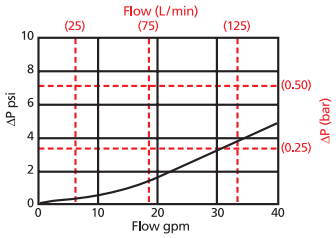

$\Delta P_{element}$

8ZZ

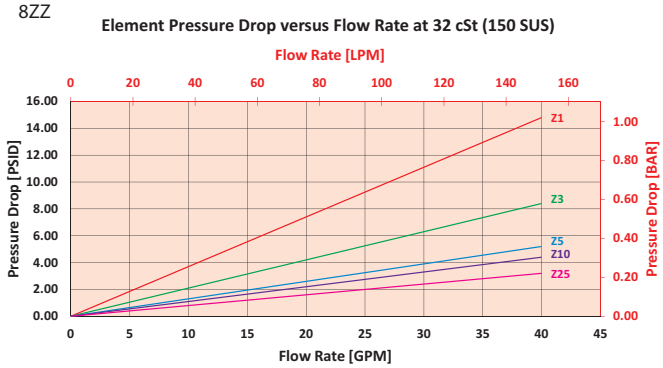

$$\Delta P_{filter} = \Delta P_{housing} + (\Delta P_{element} * V_f)$$

Exercise:

Determine ΔP_{filter} at 30 gpm (119.7 L/min) for ZT8ZZ10SY2 using 160 SUS (34 cSt) fluid.

Use the housing pressure curve to determine $\Delta P_{housing}$ at 30 gpm. In this case, $\Delta P_{housing}$ is 3.5 psi (.24 bar) on the graph for the ZT housing.

Use the element pressure curve to determine $\Delta P_{element}$ at 30 gpm. In this case, $\Delta P_{element}$ is 3.5 psi (.24 bar) according to the graph for the 8ZZ10 element.

Because the viscosity in this sample is 160 SUS (34 cSt), we determine the Viscosity Factor (V_f) by dividing the Operating Fluid Viscosity with the Standard Viscosity of 150 SUS (32 cSt). To best determine your Operating Fluid Viscosity, please reference the chart in Appendix D.

Finally, the overall filter pressure differential, ΔP_{filter}, is calculated by adding $\Delta P_{housing}$ with the true element pressure differential, ($\Delta P_{element} * V_f$). The $\Delta P_{element}$ from the graph has to be multiplied by the viscosity factor to get the true pressure differential across the element.

Solution:

$\Delta P_{housing}$ = 3.5 psi [.24 bar] | $\Delta P_{element}$ = 3.5 psi [.24 bar]

V_f = 160 SUS (34 cSt) / 150 SUS (32 cSt) = 1.1

ΔP_{filter} = 3.5 psi + (3.5 psi * 1.1) = 7.4 psi

OR

ΔP_{filter} = .24 bar + (.24 bar * 1.1) = .50 bar

Note:
If your element is not graphed, use the following equation:
$\Delta P_{element}$ = Flow Rate x $\Delta P_{f.}$ Plug this variable into the overall pressure drop equation.

Ele.	ΔP
8Z3	0.25
8Z10	0.09
8Z25	0.02

Tank-Mounted Filter

Filter Model Number Selection

Highlighted product eligible for QuickDelivery

How to Build a Valid Model Number for a Schroeder ZT:

BOX 1	BOX 2	BOX 3	BOX 4	BOX 5	BOX 6	BOX 7	BOX 8
ZT –	–	–	–	–	–	–	–

Example: NOTE: One option per box

BOX 1	BOX 2	BOX 3	BOX 4	BOX 5	BOX 6	BOX 7	BOX 8	
ZT –	8 –	Z10 –	–	S –	Y2 –	–	–	= ZT8Z10SY2

BOX 1

Filter Series
ZT
GZT (GeoSeal®)

BOX 2

Element Length (in)
8

BOX 3

Element Size and Media
Z3 = Z size 3 µ E media (cellulose)
Z10 = Z size 10 µ E media (cellulose)
Z25 = Z size 25 µ E media (cellulose)
ZZ1 = Z size 1 µ Excellement® Z-Media® (synthetic)
ZZ3 = Z size 3 µ Excellement® Z-Media® (synthetic)
ZZ5 = Z size 5 µ Excellement® Z-Media® (synthetic)
ZZ10 = Z size 10 µ Excellement® Z-Media® (synthetic)
ZZ25 = Z size 25 µ Excellement® Z-Media® (synthetic)
GeoSeal® Element Options
GTZ3 = Z size 3 µ E media (cellulose)
GTZ10 = Z size 10 µ E media (cellulose)
GTZ25 = Z size 25 µ E media (cellulose)
GTZZ1 = Z size 1 µ Excellement® Z-Media® (synthetic)
GTZZ3 = Z size 3 µ Excellement® Z-Media® (synthetic)
GTZZ5 = Z size 5 µ Excellement® Z-Media® (synthetic)
GTZZ10 = Z size 10 µ Excellement® Z-Media® (synthetic)
GTZZ25 = Z size 25 µ Excellement® Z-Media® (synthetic)

BOX 4

Seal Material
Omit = Buna N

BOX 5

Inlet Porting
P = 1" NPTF
PP = Dual 1" NPTF
S = SAE-16
SS = Dual SAE-16
B = ISO 228 G-1"
BB = Dual ISO 228 G-1"

BOX 6

	Dirt Alarm® Options
	Omit = None
Visual	Y2 = Back-mounted tri-color gauge
	Y2C = Bottom-mounted gauge in cap
	Y5 = Back-mounted gauge in cap
Electrical	ES = Electric switch
	ES1 = Heavy-duty electric switch with conduit connection
	ES2 = Electrical Switch with Deutsch Connector

BOX 7

Outlet Porting
Omit = 1½" NPT male
D = Diffuser
T = 13" Tube Extension
G3039 = 1.5" NPT outlet removed

BOX 8

Options
Omit = None
B = Breather
M = Mounting Gasket (Buna N)

Air Fusion Technology

AFT

Model No. of filter in photograph is AFT8LKZ10L16N

Features and Benefits

- Patent Pending In-tank filter design
- Lightweight and as part of a tank optimization package can reduce reservoir size
- Lock & Key Quality Protected, OEM Specific Interfaces available
- Superior de-aeration performance
- 360 degree swivel connection. Lines stay connected during element changeouts
- Anti-Drain Check valve option to keep lines from emptying during element change outs
- 20 ft-lb max loading torque on inlet port

Part of Schroeder Industries' Energy Sustainability Initiative

40 gpm
151 L/min
100 psi
7 bar

Filter Housing Specifications

Flow Rating:	40 gpm (151 L/min)
Max. Operating Pressure:	100 psi (7 bar)
Min. Yield Pressure:	350 psi (24 bar)
Rated Fatigue Pressure:	100 psi (7 bar)
Temp. Range:	-20°F to 225°F (-29°C to 107°C)
Bypass Setting:	Cracking: 25 psi (1.7 bar)
Element Change Clearance:	4LK = 5.28" [134mm] 8LK = 8.62" [219mm] 12LK = 11.96" [304mm] 16LK = 15.30" [389mm]
Element Case:	12 elements

Fluid Compatibility

Type Fluid	Appropriate Schroeder Media
Petroleum Based Fluids	Z-Media® and ASP® media (synthetic)
High Water Content	All Z-Media® and ASP® media (synthetic)
Invert Emulsions	10 and 25 µ Z-Media® and 10 µ ASP® media (synthetic)
Water Glycols	3, 5, 10 and 25 µ Z-Media® and all ASP® media (synthetic)
Phosphate Esters	All Z-Media® (synthetic) with H (EPR) seal designation and all ASP® media (synthetic)

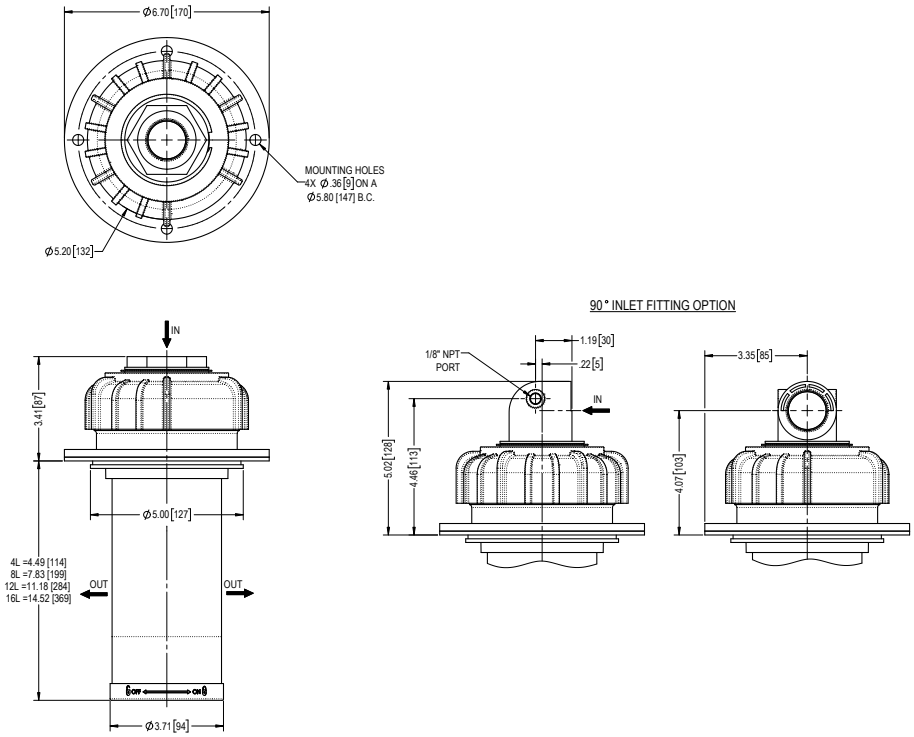

Metric dimensions in (mm).

Element Performance Information & Dirt Holding Capacity

Element	Filtration Ratio Per ISO 4572/NFPA T3.10.8.8 Using automated particle counter (APC) calibrated per ISO 4402			Filtration Ratio wrt ISO 16889 Using APC calibrated per ISO 11171	
	$ß_x \geq 75$	$ß_x \geq 100$	$ß_x \geq 200$	$ß_x(c) \geq 200$	$ß_x(c) \geq 1000$
4LKZ3, 8LKZ3 12LKZ3, 16LKZ3	<1.0	<1.0	<2.0	<4.0	4.8
4LKZ5, 8LKZ5 12LKZ5, 16LKZ5	2.5	3.0	4.0	4.8	6.3
4LKZ10, 8LKZ10 12LKZ10, 16LKZ10	7.4	8.2	4.0	8.0	10.0
4LKZ25, 8LKZ25 12LKZ25, 16LKZ25	18.0	20.0	22.5	19.0	24.0

Element	DHC (gm)	Element	DHC (gm)	Element	DHC (gm)	Element	DHC (gm)
4LKZ3	8	8LKZ3	16	12LKZ3	23	16LKZ3	30
4LKZ5	9	8LKZ5	18	12LKZ5	26	16LKZ5	33
4LKZ10	11	8LKZ10	22	12LKZ10	32	16LKZ10	41
4LKZ25	18	8LKZ25	36	12LKZ25	52	16LKZ25	69

Element Burst Pressure: 86 psi (6 bar)

Flow Direction: Inside Out

Element Nominal Dimensions: 4LKZ: 3.71" (94.23 mm) O.D. x 4.49" (114.05 mm) long
8LKZ: 3.71" (94.23 mm) O.D. x 7.84" (199.14 mm) long
12LKZ: 3.71" (94.23 mm) O.D. x 11.18" (283.97 mm) long
16LKZ: 3.71" (94.23 mm) O.D. x 14.52" (368.81 mm) long

Pressure Drop Information

Based on Flow Rate and Viscosity

$\Delta P_{housing}$

AFT $\Delta P_{housing}$ for fluids with sp gr (specific gravity) = 0.86:

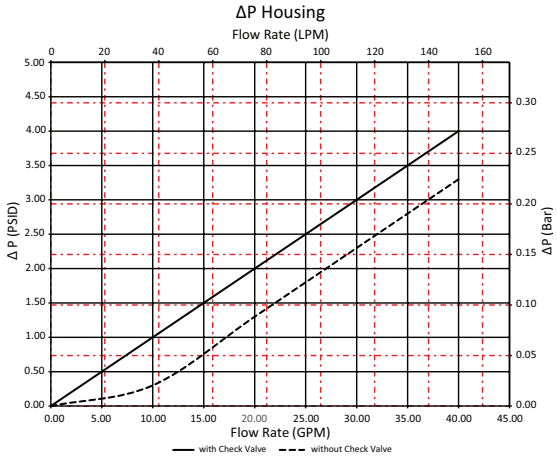

$\Delta P_{element}$

4LKZ

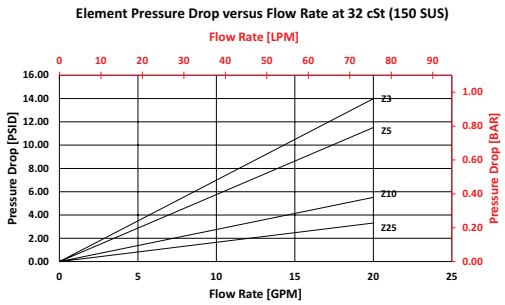

8LKZ

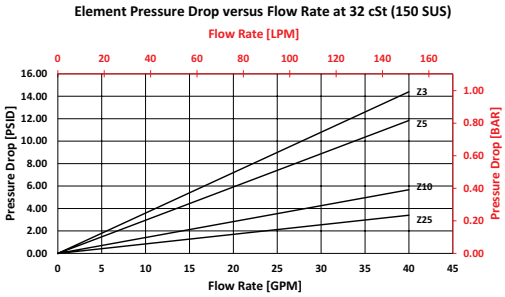

12LKZ

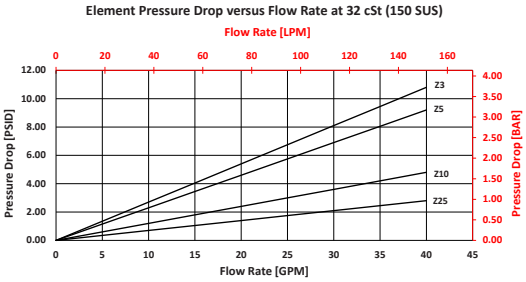

16LKZ

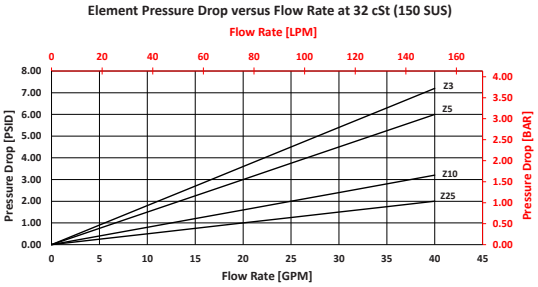

Note: Additional Pressured Drop information available upon request

$$\Delta P_{filter} = \Delta P_{housing} + (\Delta P_{element} * V_f)$$

Exercise:

Determine ΔP_{filter} at 10 gpm (37.9 L/min) for AFT8LKZ10L16Y2 using 160 SUS (34 cSt) fluid.
Use the housing pressure curve to determine $\Delta P_{housing}$ at 10 gpm. In this case, $\Delta P_{housing}$ is 1.5 psi (.10 bar) on the graph for the AFT housing.

Use the element pressure curve to determine $\Delta P_{element}$ at 10 gpm. In this case, $\Delta P_{element}$ is 1.4 psi (.10 bar) according to the graph for the 8LKZ10 element.

Because the viscosity in this sample is 160 SUS (34 cSt), we determine the Viscosity Factor (V_f) by dividing the Operating Fluid Viscosity with the Standard Viscosity of 150 SUS (32 cSt). To best determine your Operating Fluid Viscosity, please reference the chart in Appendix D.

Finally, the overall filter pressure differential, ΔP_{filter}, is calculated by adding $\Delta P_{housing}$ with the true element pressure differential, ($\Delta P_{element} * V_f$). The $\Delta P_{element}$ from the graph has to be multiplied by the viscosity factor to get the true pressure differential across the element.

Solution:

$\Delta P_{housing}$ = 1.5 psi [.10 bar] | $\Delta P_{element}$ = 1.4 psi [.10 bar]

V_f = 160 SUS (34 cSt) / 150 SUS (32 cSt) = 1.1

ΔP_{filter} = 1.5 psi + (1.4 psi * 1.1) = 3.0 psi

OR

ΔP_{filter} = .10 bar + (.10 bar * 1.1) = .21 bar

Air Fusion Technology

Filter Model Number Selection

How to Build a Valid Model Number for a Schroeder AFT:

BOX 1	BOX 2	BOX 3	BOX 4	BOX 5	BOX 6	BOX 7	
AFT –	–	–	–	–	–	–	=

Example: NOTE: One option per box

BOX 1	BOX 2	BOX 3	BOX 4	BOX 5	BOX 6	BOX 7	
AFT –	8LK –	Z10 –	–	L16 –	–	Y2	= AFT8LKZ10L16Y2

BOX 1

Filter Series	
AFT	Air Fusion Technology Filter

BOX 2

Element
4LK = 4" Element
8LK = 8" Element
12LK = 12" Element
16LK = 16" Element

BOX 3

Media
Z3 = 3 micron Z media
Z5 = 5 micron Z media
Z10 = 10 micron Z media
Z25 = 25 micron Z media

BOX 4

Seal
Omit = Buna
V = Viton
H = EPR

BOX 5

Porting
S12 = SAE 12
S16 = SAE 16
L12 = 90 Deg SAE 12
L16 = 90 Deg SAE 16
HB16 = 1" Hose Barb

BOX 6

Bypass
Omit = 25 psi

BOX 7

Check Valve
Omit = Check Valve
N = No Check Valve

BOX 8

Gauge Port Option (Elbow Only)
N = Plugged
Y2 = Tricolor visual indicator (Back Mounted)
Y2C = Tricolor visual indicator (Bottom Mounted)
ES = Electric Switch
ES1 = Heavy Duty Electric Switch
ES2 = Electrical Switch with Deutsch Connector

NOTES:

Box 2. Replacement element part numbers are a combination of Boxes 2, 3 and 4. Example: 8LKZ25V

Box 4. Viton® is a registered trademark of DuPont Dow Elastomers.

Box 7. Check valve prevents hydraulic oil to spill when changing out the element and it is recommended. Not including could reduce differential pressure slightly but risks a greater hydraulic oil spill on element change out.

Air Fusion Technology (Fixed Head)

AFTF

Features and Benefits

- Patent Pending In-tank filter design
- Lightweight and as part of a tank optimization package can reduce reservoir size
- Lock & Key Quality Protected, OEM Specific Interfaces available
- Superior de-aeration performance
- Fixed head connection. Lines stay connected during element changeouts

Part of Schroeder Industries' Energy Sustainability Initiative

40 gpm
151 L/min
100 psi
7 bar

Filter Housing Specifications

Flow Rating:	40 gpm (151 L/min)
Max. Operating Pressure:	100 psi (7 bar)
Min. Yield Pressure:	350 psi (24 bar)
Rated Fatigue Pressure:	100 psi (7 bar)
Temp. Range:	-20°F to 225°F (-29°C to 107°C)
Bypass Setting:	Cracking: 25 psi (1.7 bar)
Element Change Clearance:	4LK = 5.28" [134mm] 8LK = 8.62" [219mm] 12LK = 11.96" [304mm] 16LK = 15.30" [389mm]
Element Case:	12 elements

Fluid Compatibility

Type Fluid	Appropriate Schroeder Media
Petroleum Based Fluids	Z-Media® and ASP® media (synthetic)
High Water Content	All Z-Media® and ASP® media (synthetic)
Invert Emulsions	10 and 25 µ Z-Media® and 10 µ ASP® media (synthetic)
Water Glycols	3, 5, 10 and 25 µ Z-Media® and all ASP® media (synthetic)
Phosphate Esters	All Z-Media® (synthetic) with H (EPR) seal designation and all ASP® media (synthetic)

Air Fusion Technology (Fixed Head)

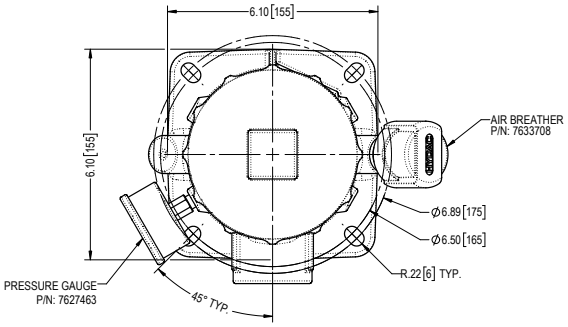

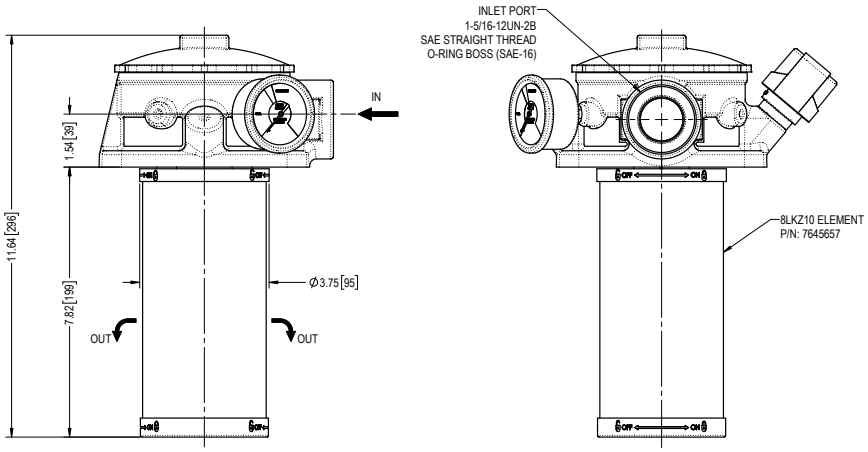

Metric dimensions in (mm).

Element Performance Information & Dirt Holding Capacity

Element	Filtration Ratio Per ISO 4572/NFPA T3.10.8.8 Using automated particle counter (APC) calibrated per ISO 4402			Filtration Ratio wrt ISO 16889 Using APC calibrated per ISO 11171	
	$ß_x \geq 75$	$ß_x \geq 100$	$ß_x \geq 200$	$ß_x(c) \geq 200$	$ß_x(c) \geq 1000$
4LKZ3, 8LKZ3 12LKZ3, 16LKZ3	<1.0	<1.0	<2.0	<4.0	4.8
4LKZ5, 8LKZ5 12LKZ5, 16LKZ5	2.5	3.0	4.0	4.8	6.3
4LKZ10, 8LKZ10 12LKZ10, 16LKZ10	7.4	8.2	4.0	8.0	10.0
4LKZ25, 8LKZ25 12LKZ25, 16LKZ25	18.0	20.0	22.5	19.0	24.0

Element	DHC (gm)	Element	DHC (gm)	Element	DHC (gm)	Element	DHC (gm)
4LKZ3	8	8LKZ3	16	12LKZ3	23	16LKZ3	30
4LKZ5	9	8LKZ5	18	12LKZ5	26	16LKZ5	33
4LKZ10	11	8LKZ10	22	12LKZ10	32	16LKZ10	41
4LKZ25	18	8LKZ25	36	12LKZ25	52	16LKZ25	69

Element Burst Pressure: 86 psi (6 bar)

Flow Direction: Inside Out

Element Nominal Dimensions: 4LKZ: 3.71" (94.23 mm) O.D. x 4.49" (114.05 mm) long
8LKZ: 3.71" (94.23 mm) O.D. x 7.84" (199.14 mm) long
12LKZ: 3.71" (94.23 mm) O.D. x 11.18" (283.97 mm) long
16LKZ: 3.71" (94.23 mm) O.D. x 14.52" (368.81 mm) long

Pressure Drop Information
Based on Flow Rate and Viscosity

$\Delta P_{housing}$

AFT $\Delta P_{housing}$ for fluids with sp gr (specific gravity) = 0.86:

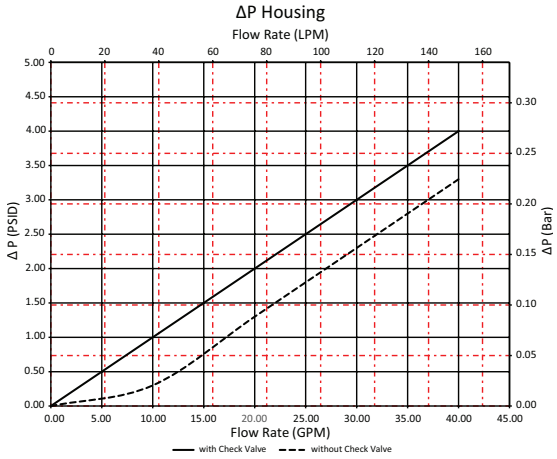

$\Delta P_{element}$

4LKZ

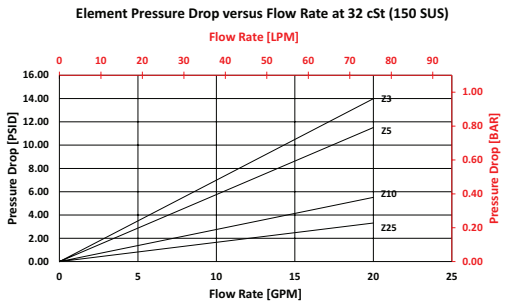

8LKZ

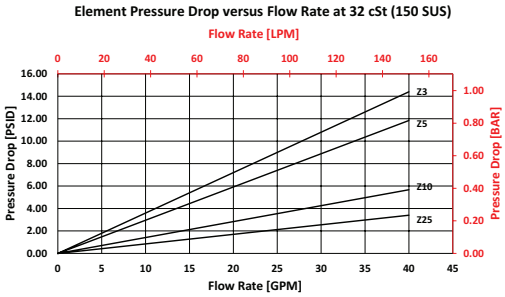

12LKZ

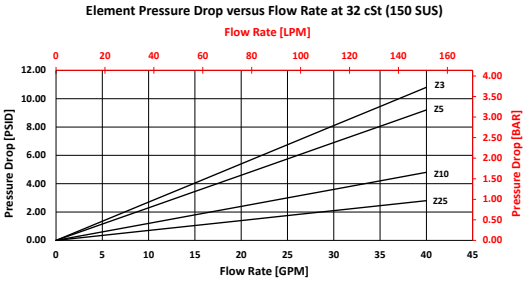

16LKZ

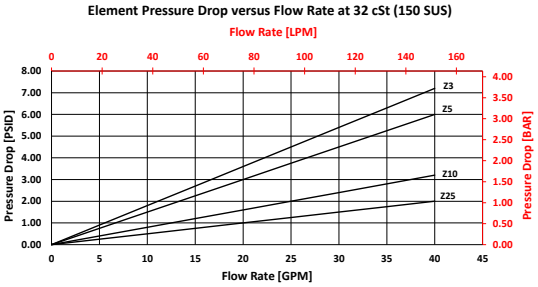

Note: Additional Pressured Drop information available upon request

$$\Delta P_{filter} = \Delta P_{housing} + (\Delta P_{element} * V_f)$$

Exercise:

Determine ΔP_{filter} at 10 gpm (37.9 L/min) for AFT8LKZ10L16Y2 using 160 SUS (34 cSt) fluid.
Use the housing pressure curve to determine $\Delta P_{housing}$ at 10 gpm. In this case, $\Delta P_{housing}$ is 1.5 psi (.10 bar) on the graph for the AFT housing.

Use the element pressure curve to determine $\Delta P_{element}$ at 10 gpm. In this case, $\Delta P_{element}$ is 1.4 psi (.10 bar) according to the graph for the 8LKZ10 element.

Because the viscosity in this sample is 160 SUS (34 cSt), we determine the Viscosity Factor (V_f) by dividing the Operating Fluid Viscosity with the Standard Viscosity of 150 SUS (32 cSt). To best determine your Operating Fluid Viscosity, please reference the chart in Appendix D.

Finally, the overall filter pressure differential, ΔP_{filter}, is calculated by adding $\Delta P_{housing}$ with the true element pressure differential, ($\Delta P_{element} * V_f$). The $\Delta P_{element}$ from the graph has to be multiplied by the viscosity factor to get the true pressure differential across the element.

Solution:

$\Delta P_{housing}$ = 1.5 psi [.10 bar] | $\Delta P_{element}$ = 1.4 psi [.10 bar]

V_f = 160 SUS (34 cSt) / 150 SUS (32 cSt) = 1.1

ΔP_{filter} = 1.5 psi + (1.4 psi * 1.1) = 3.0 psi

OR

ΔP_{filter} = .10 bar + (.10 bar * 1.1) = .21 bar

Air Fusion Technology (Fixed Head)

Filter Model Number Selection

How to Build a Valid Model Number for a Schroeder AFTF:

BOX 1	BOX 2	BOX 3	BOX 4	BOX 5	BOX 6	BOX 7	BOX 8	
AFTF –	–	–	–	–	–	–	B	=

Example: NOTE: One option per box

BOX 1	BOX 2	BOX 3	BOX 4	BOX 5	BOX 6	BOX 7	BOX 8	
AFTF –	8LK –	Z10 –	–	S16 –	–	Y2	B	= AFTF8LKZ10S16Y2B

BOX 1

Filter Series	
AFTF	Air Fusion Technology Fixed Head Filter

BOX 2

Element
4LK = 4" Element
8LK = 8" Element
12LK = 12" Element
16LK = 16" Element

BOX 3

Media
Z3 = 3 micron Z media
Z5 = 5 micron Z media
Z10 = 10 micron Z media
Z25 = 25 micron Z media

BOX 4

Seal
Omit = Buna
V = Viton

BOX 5

Porting
S16 = SAE 16

BOX 6

Bypass
Omit = 25 psi

BOX 7

Gauge Port Option
N = Plugged
Y2 = Tricolor visual indicator (Back Mounted)
ES = Electric Switch
ES1 = Heavy Duty Electric Switch
ES2 = Electrical Switch with Deutsch Connector

BOX 8

Breather
B = Breather
Omit = None

NOTES:

Box 2. Replacement element part numbers are a combination of Boxes 2, 3 and 4. Example: 8LKZ25V

Box 4. Viton® is a registered trademark of DuPont Dow Elastomers. All elements for this filter are supplied with Viton® seals.

Box 7. Suggested bolt type to fit with the Y2 gauge: 7606649 - BOLT,HH,M10-1.50X20,GR8.8,PLT.

Tank-Mounted Filter

GPT

Model No. of filter in photograph is GPT15DCLKZ25DF32S24

Features and Benefits

- Filter bypass in cap vs base, cleaner cold start
- Patent Pending In-Tank Design
- Lock & Key Quality Protected

Part of Schroeder Industries' Energy Sustainability Initiative

Filter Housing Specifications

Flow Rating:	Up to 175 GPM (662 L/min) FOR 150 SUS (32 cSt) Fluids
Max. Operating Pressure:	150 PSI (10.3 bar)
Min. Yield Pressure:	Consult Factory
Rated Fatigue Pressure:	89 psi (6 bar)
Temp. Range:	-20 F to 225 F (-29 C to 107 C)
Bypass Setting:	Cracking: 35 PSI (2.4 bar)
Ported Head and Cap:	Die Cast Aluminum
Weight:	7 LBS. (3.18 kg)
Element Change Clearance:	20.0" (508 mm)

Fluid Compatibility

Type Fluid:	Appropriate Schroeder Media
High Water Content:	All Z-Media (synthetic)
Invert Emulsions:	10 and 25 micron Z-Media (synthetic)
Water Glycols:	3, 5, 10, and 25 micron Z-Media (synthetic)
Phosphate Esters:	All Z-Media (synthetic) with H (EPR) seal designation

Element Performance Information

Element	Filtration Ratio Per ISO 4572/NFPA T3.10.8.8 Using automated particle counter (APC) calibrated per ISO 4402 $ß_x \geq 75$	Filtration Ratio per ISO 16889 Using APC calibrated per ISO 11171 $ß_x(c) \geq 1000$
15TLKZ3	<4.0	4.8
15TLKZ5	4.8	6.3
15TLKZ10	8.0	10.0
15TLKZ25	19.0	24.0

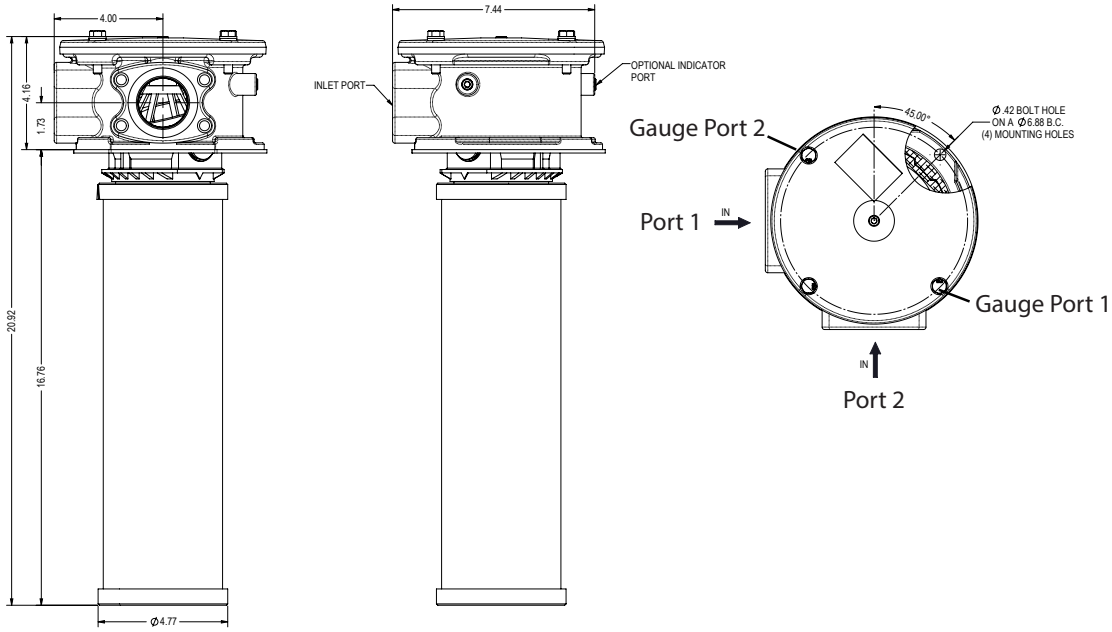

Tank-Mounted Filter

GPT

Pressure Drop Information Based on Flow Rate & Viscosity

Element	ΔP	Housing	ΔP
15TLKZ3	0.09	0 GPM	0
15TLKZ5	0.08	50 GPM	0.5
15TLKZ10	0.06	100 GPM	1
15TLKZ25	0.05	150 GPM	1.5
		200 GPM	2.0

Element Dirt Holding Capacity

Element	DHC (gm)
15TLKZ3	234
15TLKZ5	259
15TLKZ10	231
15TLKZ25	312

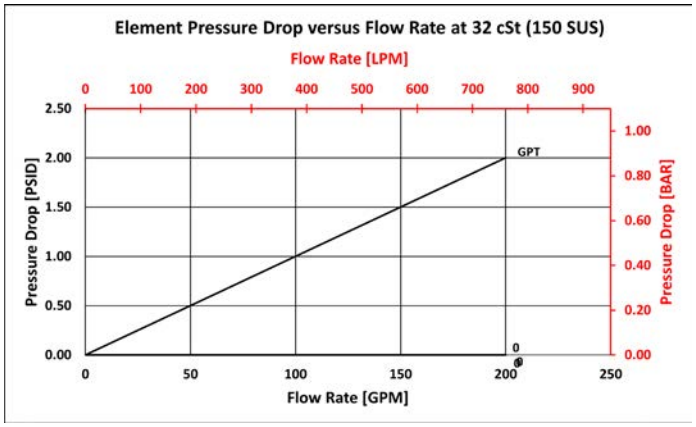

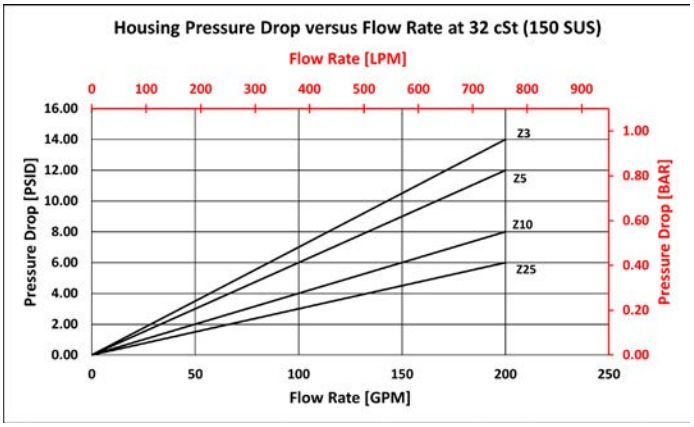

How to Build a Valid Model Number for a Schroeder GPT:

GPT	[ ] –	[ ] –	[ ]
	Element	Porting	Indicator

Element	Element	Media	Micron Rating	Seals
Note: Element code can also be used to build a replacement element.	**15DCLK =** 15" Element	**Z =** Excellement Z-Media (synthetic) Note: Other media is available upon request.	**3 =** 3 Micron **5 =** 5 Micron **10 =** 10 Micron **25 =** 25 Micron	**Omit =** Buna **V =** Viton **H =** EPR

Porting	Porting	Block Port Options	Bypass
	DF32S24	**Omit =** None **N1 =** Block Port 1 **N2 =** Block Port 2	**Omit =** 35 PSI Cracking

Indicator	Indicator Location
Omit = None **Y2 =** Tricolor Visual Indicator (Back Mounted) **Y2C=** Tricolor Visual Indicator (Bottom Mounted) **ES5 =** Electric Switch with 3-Pin Deutsch Connector	**Omit =** No Indicator **P1 =** Gauge Port 1 **P2 =** Gauge Port 2

The 15DCLK element assembly is made up of the GPT diverter cap and the 15TLK element.
A list of model code pairings is shown below:

15DCLKZ10,ELEMENT = DIVERTER, ASSY, GPT, BUNA + 15TLKZ10, ELEMENT
15DCLKZ25,ELEMENT = DIVERTER, ASSY, GPT, BUNA + 15TLKZ25, ELEMENT
15DCLKZ3,ELEMENT = DIVERTER, ASSY, GPT, BUNA + 15TLKZ3, ELEMENT
15DCLKZ5,ELEMENT = DIVERTER, ASSY, GPT, BUNA + 15TLKZ5, ELEMENT

15DCLKZ10 GPT Diverter 15TLKZ10

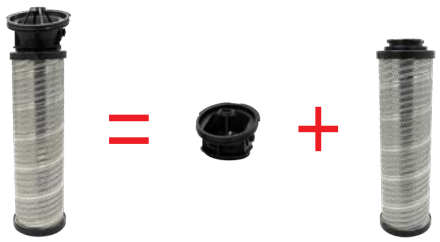

Tank-Mounted Filter KFT

Model No. of filter in photograph is KFT1K10P24P24NB

Features and Benefits

- Low pressure tank-mounted filter
- Meets HF4 automotive standard
- Multiple inlet/outlet porting options
- Top, side or bottom mounting
- Optional check valve prevents reservoir siphoning
- Can also be used in return line application (contact factory)
- Double stacking of K-size element can be replaced by single KK element
- Allows consolidation of inventoried replacement elements by using K-size elements
- Also available with DirtCatcher® elements (KD and KKD)

100 gpm
380 L/min
100 psi
7 bar

Filter Housing Specifications

Flow Rating:	Up to 100 gpm (380 L/min) for 150 SUS (32 cSt) fluids
Max. Operating Pressure:	100 psi (7 bar)
Min. Yield Pressure:	400 psi (28 bar), per NFPA T2.6.1
Rated Fatigue Pressure:	Contact Factory
Temp. Range:	-20°F to 225°F (-29°C to 107°C)
Bypass Setting:	Cracking: 25 psi (1.7 bar) Full Flow: 48 psi (3.3 bar)
Porting Head: Porting Cap: Element Case:	Steel Die Cast Aluminum (standard); Steel (optional) Steel
Weight of KFT-1K: Weight of KFT-2K:	10.0 lbs. (4.5 kg) 13.6 lbs. (6.2 kg)
Element Change Clearance:	8.0" (205 mm) for 1K; 17.50" (445 mm) for KK; 26.5" (673 mm) for 27K

Fluid Compatibility

Type Fluid	Appropriate Schroeder Media
Petroleum Based Fluids	All E media (cellulose), Z-Media® and ASP® media (synthetic)
High Water Content	All Z-Media and ASP® media (synthetic)
Invert Emulsions	10 and 25 µ Z-Media® (synthetic), 10 µ ASP® media (synthetic)
Water Glycols	3, 5, 10 and 25 µ Z-Media® (synthetic), 3, 5 and 10 µ ASP® media (synthetic)
Phosphate Esters	All Z-Media® (synthetic) with H (EPR) seal designation, ASP® media (synthetic) and 3 and 10 µ E media (cellulose) with H (EPR) seal designation
Skydrol®	3, 5, 10 and 25 µ Z-Media® (synthetic) with H.5 seal designation, ASP® media (synthetic) (EPR seals and stainless steel wire mesh in element, and light oil coating on housing exterior)

KFT Tank-Mounted Filter

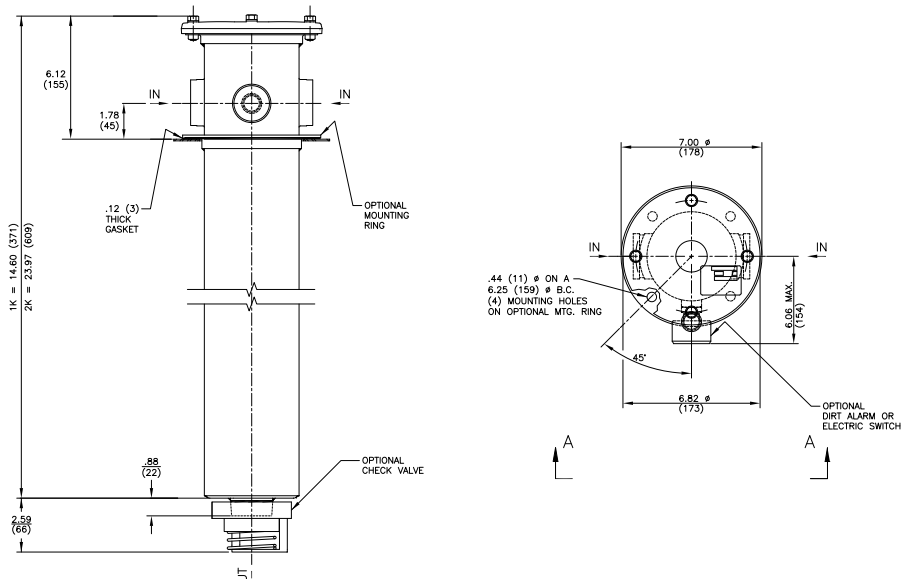

Metric dimensions in ( ).

Element Performance Information & Dirt Holding Capacity

Element	Filtration Ratio Per ISO 4572/NFPA T3.10.8.8 Using automated particle counter (APC) calibrated per ISO 4402			Filtration Ratio per ISO 16889 Using APC calibrated per ISO 11171	
	$ß_x \geq 75$	$ß_x \geq 100$	$ß_x \geq 200$	$ß_x(c) \geq 200$	$ß_x(c) \geq 1000$
KZ1/KKZ1	<1.0	<1.0	<1.0	<4.0	4.2
KZ3/KKZ3/KAS3/KKAS3	<1.0	<1.0	<2.0	<4.0	4.8
KZ5/KKZ5/KAS5/KKAS5	2.5	3.0	4.0	4.8	6.3
KZ10/KKZ10/KAS10/KKAS10	7.4	8.2	10.0	8.0	10.0
KZ25/KKZ25	18.0	20.0	22.5	19.0	24.0

Element	DHC (gm)	Element	DHC (gm)	Element	DHC (gm)	Element	DHC (gm)
KZ1	112	KKZ1	224	KDZ1	89	KKDZ1	188
KZ3/KAS3	115	KKZ3/KKAS3	230	KDZ3	71	KKDZ3	150
KZ5/KAS5	119	KKZ5/KKAS5	238	KDZ5	100	KKDZ5	210
KZ10/KAS10	108	KKZ10/KKAS10	216	KDZ10	80	KKDZ10	168
KZ25	93	KKZ25	186	KDZ25	81	KKDZ25	171

Element Collapse Rating: 150 psid (10 bar) for standard elements

Flow Direction: Outside In

Element Nominal Dimensions: K: 3.9" (99 mm) O.D. x 9.0" (230 mm) long
KK: 3.9" (99 mm) O.D. x 18.0" (460 mm) long

Pressure Drop Information

Based on Flow Rate and Viscosity

$\Delta P_{housing}$

KFT $\Delta P_{housing}$ for fluids with sp gr (specific gravity) = 0.86:

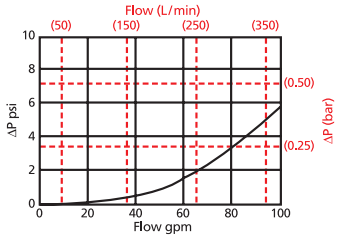

$\Delta P_{element}$

KZ

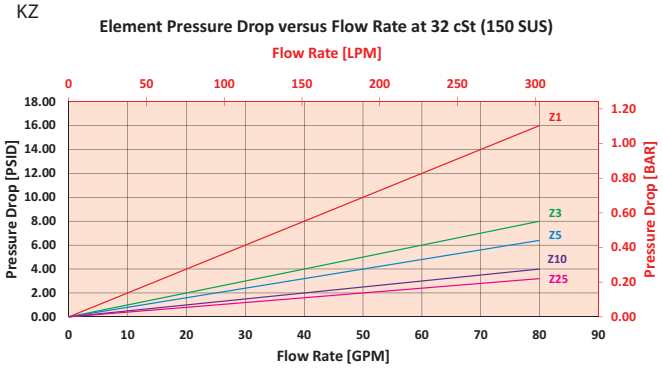

KKZ/2KZ

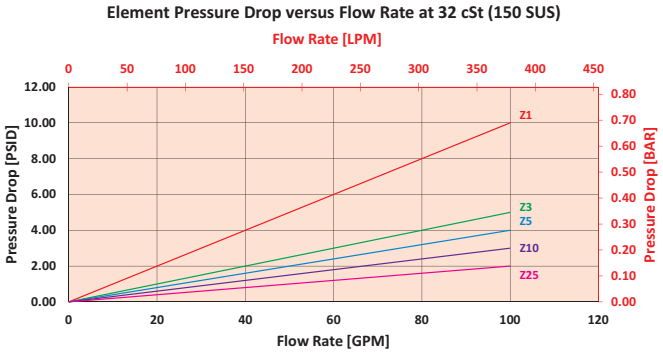

$$\Delta P_{filter} = \Delta P_{housing} + (\Delta P_{element} * V_f)$$

Exercise:

Determine ΔP_{filter} at 80 gpm (303.2 L/min) for KFT1KZ10S24S24NY2G820 using 160 SUS (34 cSt) fluid.

Use the housing pressure curve to determine $\Delta P_{housing}$ at 80 gpm. In this case, $\Delta P_{housing}$ is 3.5 psi (.24 bar) on the graph for the KFT housing.

Use the element pressure curve to determine $\Delta P_{element}$ at 80 gpm. In this case, $\Delta P_{element}$ is 4 psi (.27 bar) according to the graph for the KZ10 element.

Because the viscosity in this sample is 200 SUS (24 cSt), we determine the Viscosity Factor (V_f) by dividing the Operating Fluid Viscosity with the Standard Viscosity of 150 SUS (32 cSt). To best determine your Operating Fluid Viscosity, please reference the chart in Appendix D.

Finally, the overall filter pressure differential, ΔP_{filter}, is calculated by adding $\Delta P_{housing}$ with the true element pressure differential, ($\Delta P_{element} * V_f$). The $\Delta P_{element}$ from the graph has to be multiplied by the viscosity factor to get the true pressure differential across the element.

Solution:

$\Delta P_{housing}$ = 3.5 psi [.24 bar] | $\Delta P_{element}$ = 4 psi [.27 bar]

V_f = 160 SUS (34 cSt) / 150 SUS (32 cSt) = 1.1

ΔP_{filter} = 3.5 psi + (4 psi * 1.1) = 7.9 psi

OR

ΔP_{filter} = .24 bar + (.27 bar * 1.1) = .54 bar

Note:
If your element is not graphed, use the following equation:
$\Delta P_{element}$ = Flow Rate x ΔP_f Plug this variable into the overall pressure drop equation.

Ele.	ΔP	Ele.	ΔP	Ele.	ΔP
K3	0.25	2K3/ KK3	0.12	3KZ1/ 27KZ1	0.05
K10	0.09	2K10/ KK10	0.05	3KZ3/ 27KZ3	0.03
K25	0.02	2K25/ KK25	0.01	3KZ5/ 27KZ5	0.02
KAS3	0.10	2KAS3/ KKAS3	0.05	3KZ10/ 27KZ10	0.02
KAS5	0.08	2KAS5/ KKAS5	0.04	3KZ25/ 27KZ25	0.01
KAS10	0.05	2KAS10/ KKAS10	0.03	3K3	0.08
KDZ1	0.24	2KDZ1	0.12	3K10	0.03
KDZ3	0.12	2KDZ3	0.06	3K25	0.01
KDZ5	0.10	2KDZ5	0.05	3KAS3/ 27KAS3	0.03
KDZ10	0.06	2KDZ10	0.03	3KAS5/ 27KAS5	0.02
KDZ25	0.04	2KDZ25	0.02	3KAS10/ 27KAS10	0.02

KFT Tank-Mounted Filter

Filter Model Number Selection

How to Build a Valid Model Number for a Schroeder KFT:

BOX 1	BOX 2	BOX 3	BOX 4	BOX 5	BOX 6	BOX 7	BOX 8	BOX 9	BOX 10
KFT									

Example: NOTE: One option per box

BOX 1	BOX 2	BOX 3	BOX 4	BOX 5	BOX 6	BOX 7	BOX 8	BOX 9	BOX 10	
KFT	1K	Z	10		S24 S24 N			Y2	G820	= KFT1KZ10S24S 24NY2G820

BOX 1

Filter Series
KFT

BOX 2

Element Size and Length	
1	K, KK
2	K

BOX 3

Media Type	
Omit	= E media (cellulose)
Z	= Excellement® Z-Media® (synthetic)
AS	= Anti-Static Pleat Media (synthetic)
ZW	= Aqua-Excellement™ ZW media
DZ	= DirtCatcher® with Excellement® Z-Media®

BOX 4

Element Part Number	
1	= 1 µ Z, ZW, and DZ media
3	= 3 µ AS,E, Z, ZW, and DZ media
5	= 5 µ AS, Z, ZW, and DZ media
10	= 10 µ AS, E, M, Z, ZW, and DZ media
25	= 25 µ E, M, Z, ZW, and DZ media

BOX 5

Seal Material	
Omit	= Buna N
H	= EPR
H.5	= Skydrol® Compatibility

BOX 6 Specification of all 4 ports is required

Inlet Porting			
Port 1 (Standard)	Port 2 (Optional)	Port 3 (Optional)	Port 4 (Optional)
N = None	N = None	N = None	N = None
			P2 = 1/8" NPTF
		P8 = ½" NPTF	P8 = ½" NPTF
P12 = ¾" NPTF	P12 = ¾" NPTF	P12 = ¾" NPTF	P12 = ¾" NPTF
P16 = 1" NPTF	P16 = 1" NPTF	P16 = 1" NPTF	P16 = 1" NPTF
P20 = 1¼" NPTF	P20 = 1¼" NPTF	P20 = 1¼" NPTF	P20 = 1¼" NPTF
P24 = 1½" NPTF	P24 = 1½" NPTF	P24 = 1½" NPTF	P24 = 1½" NPTF
P32 = 2" NPTF	P32 = 2" NPTF	P32 = 2" NPTF	P32 = 2" NPTF
S8 = SAE-8	S8 = SAE-8	S8 = SAE-8	S8 = SAE-8
S12 = SAE-12	S12 = SAE-12	S12 = SAE-12	S12 = SAE-12
S16 = SAE-16	S16 = SAE-16	S16 = SAE-16	S16 = SAE-16
S20 = SAE-20	S20 = SAE-20	S20 = SAE-20	S20 = SAE-20
S24 = SAE-24	S24 = SAE-24	S24 = SAE-24	S24 = SAE-24

Inlet Porting Location

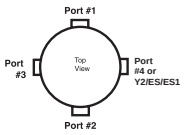

BOX 7

Outlet Porting Options	
Omit	= 1½" NPT male
C	= Check valve
D	= Diffuser
CD	= Check valve & diffuser
T	= 13" Tube extension
A	= Non-threaded outlet

BOX 8

Optional Mounting Flange	
Omit	= None
B	= Flange with 4 holes
BW	= Flange with no holes

BOX 9

Dirt Alarm® Options		
	Omit =	None
Visual	Y2 =	Back-mounted tri-color gauge (located in Port 4)
	Y2C =	Bottom-mounted tri-color gauge in cap
	Y5 =	Back-mounted gauge in cap
Electrical	ES =	Electric switch (located in port 4)
	ES1 =	Heavy-duty electric switch with conduit connector (located in port 4)
	ES2 =	Electrical Switch with Deutsch Connector

BOX 10

Additional Options	
Omit	= None
G2293	= Cork gasket
G820	= Steel cap

NOTES:

Box 2. Number of elements must equal 1 when using KK elements.

Box 3. Replacement element part numbers are identical to contents of Boxes 2, 3, 4 and 5. K specifies one 9" element; KK specifies one 18" element. Example: KKZ10

Box 5. H.5 seal designation includes the following: EPR seals, stainless steel wire mesh on elements, and light oil coating on housing exterior. Skydrol® is a registered trademark of Solutia Inc. Viton® is a registered trademark of DuPont Dow Elastomers.

Box 7. See also "Accessories for Tank-Mounted Filters," page 307.

Box 9. YC2 and Y5 are not available with the G820.

Tank-Mounted Filter RT

Model No. of filter in photograph is RT1K10S24NP16Y2.

Features and Benefits

- Low pressure tank-mounted filter with up to 3 inlet ports
- Meets HF4 automotive standard
- Top, side or bottom mounting
- Optional check valve prevents reservoir siphoning
- RTW model allows filter to be welded to tank, instead of being bolted
- Double and triple stacking of K-size element can be replaced by single KK or 27K-size element
- Also available with new DirtCatcher® elements (KDZ and KKDZ)
- Various Dirt Alarm® options
- Allows consolidation of inventoried replacement elements by using K-size elements
- Available with quality-protected GeoSeal® G Elements (GRT)
- Same day shipment model available

100 gpm
380 L/min
100 psi
7 bar

Filter Housing Specifications

Flow Rating:	Up to 100 gpm (380 L/min) for 150 SUS (32 cSt) fluids
Max. Operating Pressure:	100 psi (7 bar)
Min. Yield Pressure:	400 psi (28 bar), per NFPA T2.6.1
Rated Fatigue Pressure:	90 psi (6 bar), per NFPA T2.6.1-2005
Temp. Range:	-20°F to 225°F (-29°C to 107°C)
Bypass Setting:	Cracking: 25 psi (1.7 bar) Full Flow: 48 psi (3.3 bar)
Porting Head & Cap: Element Case:	Die Cast Aluminum Steel
Weight of RT-1K: Weight of RT-2K:	11.4 lbs. (5.2 kg) 14.5 lbs. (6.6 kg)
Element Change Clearance:	8.0" (205 mm) for 1K; 17.50" (445 mm) for KK; 26.5" (673 mm) for 27K

Fluid Compatibility

Type Fluid	Appropriate Schroeder Media
Petroleum Based Fluids	All E media (cellulose), Z-Media® and ASP® media (synthetic)
High Water Content	All Z-Media® and all ASP® media (synthetic)
Invert Emulsions	10 and 25 µ Z-Media® and 10 µ ASP® media (synthetic)
Water Glycols	3, 5, 10 and 25 µ Z-Media® and all ASP® media (synthetic)
Phosphate Esters	All Z-Media® (synthetic) with H (EPR) seal designation and 3 and 10 µ E media (cellulose) with H (EPR) seal designation and all ASP® Media (synthetic)
Skydrol®	3, 5, 10 and 25 µ Z-Media® (synthetic) with H.5 seal designation (EPR seals and stainless steel wire mesh in element, and light oil coating on housing exterior) and all ASP® media (synthetic)

Tank-Mounted Filter

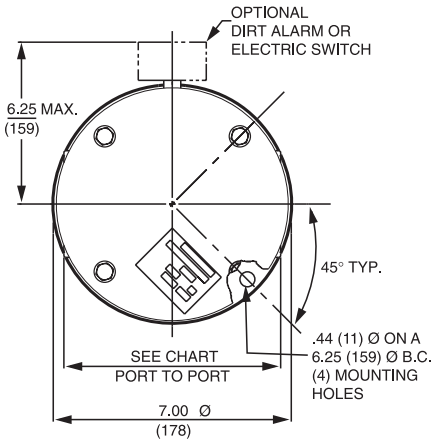

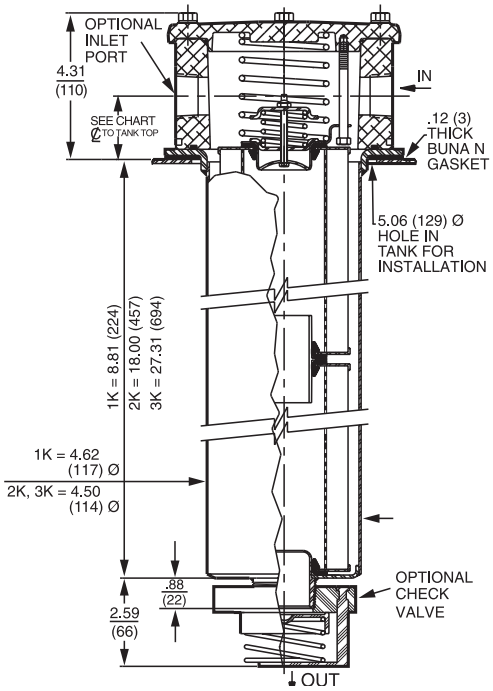

	1½" Ports 4-Bolt Flange Only	2" Ports	All Other Porting
Port to Port	7.12"	7.56" (P, S, B) 7.38" (F)	6.38"
℄ to Casting Base	1.75"	1.81"	1.56"
℄ to Tank Top	2.06"	2.12"	1.88"

Optional mounting rings available for tank welding. See page 307, reference part numbers A-LFT-813 and A-LFT-1448.

Metric dimensions in ( ).

Element Performance Information & Dirt Holding Capacity

Element	Filtration Ratio Per ISO 4572/NFPA T3.10.8.8 Using automated particle counter (APC) calibrated per ISO 4402			Filtration Ratio per ISO 16889 Using APC calibrated per ISO 11171	
	$ß_x \geq 75$	$ß_x \geq 100$	$ß_x \geq 200$	$ß_{x(c)} \geq 200$	$ß_{x(c)} \geq 1000$
KZ1/KKZ1/27KZ1	<1.0	<1.0	<1.0	<4.0	4.2
KZ3/KKZ3/27KZ3	<1.0	<1.0	<2.0	<4.0	4.8
KZ5/KKZ5/27KZ5	2.5	3.0	4.0	4.8	6.3
KZ10/KKZ10/27KZ10	7.4	8.2	10.0	8.0	10.0
KZ25/KKZ25/27KZ25	18.0	20.0	22.5	19.0	24.0
KZW1	N/A	N/A	N/A	<4.0	<4.0
KZW3/KKZW3	N/A	N/A	N/A	4.0	4.8
KZW5/KKZW5	N/A	N/A	N/A	5.1	6.4
KZW10/KKZW10	N/A	N/A	N/A	6.9	8.6
KZW25/KKZW25	N/A	N/A	N/A	15.4	18.5

Element	DHC (gm)	Element	DHC (gm)	Element	DHC (gm)	Element	DHC (gm)	Element	DHC (gm)	Element	DHC (gm)	Element	DHC (gm)
KZ1	112	KKZ1	224	27KZ1	336	KDZ1	89	KKDZ1	188	KZW1	61		
KZ3	115	KKZ3	230	27KZ3	345	KDZ3	71	KKDZ3	150	KZW3	64	KKZW3	128
KZ5	119	KKZ5	238	27KZ5	357	KDZ5	100	KKDZ5	210	KZW5	63	KKZW5	126
KZ10	108	KKZ10	216	27KZ10	324	KDZ10	80	KKDZ10	168	KZW10	57	KKZW10	114
KZ25	93	KKZ25	186	27KZ25	279	KDZ25	81	KKDZ25	171	KZW25	79	KKZW25	158

Element Collapse Rating: 150 psid (10 bar) for standard elements

Flow Direction: Outside In See RTI, page 275 for inside out flow version.

Element Nominal Dimensions: K: 3.9" (99 mm) O.D. x 9.0" (230 mm) long
KK: 3.9" (99 mm) O.D. x 18.0" (460 mm) long
27K: 3.9" (99 mm) O.D. x 27.0" (690 mm) long

Pressure Drop Information

Based on Flow Rate and Viscosity

$\Delta P_{housing}$

RT $\Delta P_{housing}$ for fluids with sp gr (specific gravity) = 0.86:

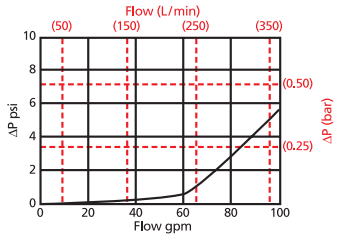

$\Delta P_{element}$

KZ

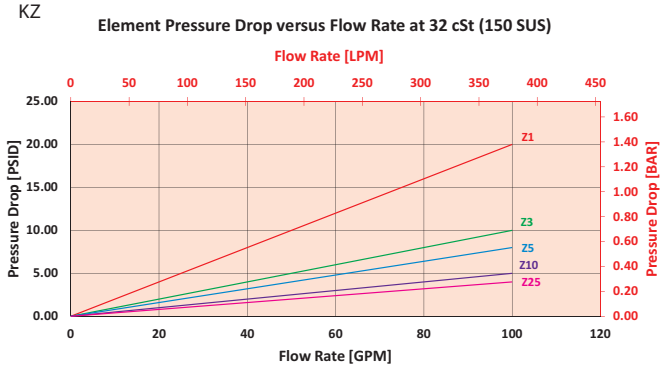

2KZ/KKZ

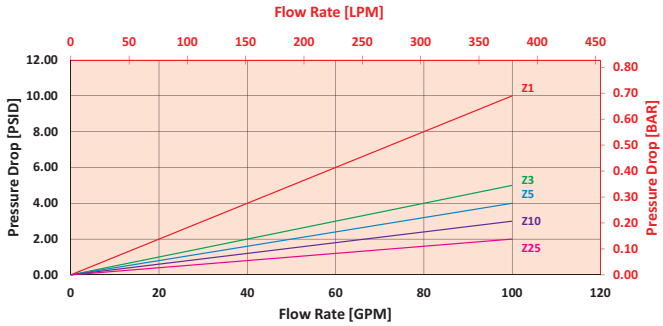

$$\Delta P_{filter} = \Delta P_{housing} + (\Delta P_{element} * V_f)$$

Exercise:

Determine ΔP_{filter} at 80 gpm (303.2 L/min) for RT1KZ10S24S24NY2 using 160 SUS (34 cSt) fluid.

Use the housing pressure curve to determine $\Delta P_{housing}$ at 80 gpm. In this case, $\Delta P_{housing}$ is 3 psi (.21 bar) on the graph for the RT housing.

Use the element pressure curve to determine $\Delta P_{element}$ at 80 gpm. In this case, $\Delta P_{element}$ is 4 psi (.27 bar) according to the graph for the KZ10 element.

Because the viscosity in this sample is 160 SUS (34 cSt), we determine the Viscosity Factor (V_f) by dividing the Operating Fluid Viscosity with the Standard Viscosity of 150 SUS (32 cSt). To best determine your Operating Fluid Viscosity, please reference the chart in Appendix D.

Finally, the overall filter pressure differential, ΔP_{filter}, is calculated by adding $\Delta P_{housing}$ with the true element pressure differential, ($\Delta P_{element} * V_f$). The $\Delta P_{element}$ from the graph has to be multiplied by the viscosity factor to get the true pressure differential across the element.

Solution:

$\Delta P_{housing}$ = 3 psi [.21 bar] | $\Delta P_{element}$ = 4 psi [.27 bar]

V_f = 160 SUS (34 cSt) / 150 SUS (32 cSt) = 1.1

ΔP_{filter} = 3 psi + (4 psi * 1.1) = 7.4 psi

OR

ΔP_{filter} = .21 bar + (.27 bar * 1.1) = .51 bar

Note:
If your element is not graphed, use the following equation:
$\Delta P_{element}$ = Flow Rate x $\Delta P_{f.}$ Plug this variable into the overall pressure drop equation.

Ele.	ΔP	Ele.	ΔP	Ele.	ΔP
K3	0.25	2K3/ KK3	0.12	3KZ1/ 27KZ1	0.05
K10	0.09	2K10/ KK10	0.05	3KZ3/ 27KZ3	0.03
K25	0.02	2K25/ KK25	0.01	3KZ5/ 27KZ5	0.02
KAS3	0.10	2KAS3/ KKAS3	0.05	3KZ10/ 27KZ10	0.02
KAS5	0.08	2KAS5/ KKAS5	0.04	3KZ25/ 27KZ25	0.01
KAS10	0.05	2KAS10/ KKAS10	0.03	3K3	0.08
KDZ1	0.24	2KDZ1	0.12	3K10	0.03
KDZ3	0.12	2KDZ3	0.06	3K25	0.01
KDZ5	0.10	2KDZ5	0.05	3KAS3/ 27KAS3	0.03
KDZ10	0.06	2KDZ10	0.03	3KAS5/ 27KAS5	0.02
KDZ25	0.04	2KDZ25	0.02	3KAS10/ 27KAS10	0.02
KZW1	0.43	2KZW1	-		
KZW3	0.32	2KZW3/ KKZW3	0.16		
KZW5	0.28	2KZW5/ KKZW5	0.14		
KZW10	0.23	2KZW10/ KKZW10	0.12		
KZW25	0.14	2KZW25/ KKZW25	0.07		

RT Tank-Mounted Filter

Filter Model Number Selection

Highlighted product eligible for QuickDelivery

How to Build a Valid Model Number for a Schroeder RT:

BOX 1	BOX 2	BOX 3	BOX 4	BOX 5	BOX 5	BOX 6A	BOX 6B	BOX 7	BOX 8
RT									

Example: NOTE: Only box 9 may contain more than one option

BOX 1	BOX 2	BOX 3	BOX 4	BOX 5	BOX 6	BOX 7A	BOX 7B	BOX 8	BOX 9	
RT	1K	Z	10		S24 S24 N			Y2		= RT1KZ10S24S24Y2

BOX 1

Filter Series
RT
RTW
GRT

BOX 2

Element Size & Length	
1K	KK, 27K
2K	
3K	
GeoSeal®	
1KBG	KKBG, 27KBG
2KBG	
3KBG	

BOX 3

Media Type
Omit = E media (cellulose)
Z = Excellement® Z-Media® (synthetic)
AS = Anti-Static Pleat Media (synthetic)
ZW = Aqua-Excellement™ ZW media
DZ = Dirtcatcher® with Excellement® Z-Media®
W = W media (water removal)
M = M media (reusable metal mesh)

BOX 4

Element Part Number
1 = 1 µ Z, ZW, and DZ media
3 = 3 µ AS,E, Z, ZW, and DZ media
5 = 5 µ AS, Z, ZW, and DZ media
10 = 10 µ AS, E, M, Z, ZW, and DZ media
25 = 25 µ E, M, Z, ZW, and DZ media
60 = 60 µ M media

BOX 5

Seal Material
Omit = Buna N
H = EPR
W = Anodized Aluminum Parts
H.5 = Skydrol® compatibility

BOX 6
Specification of all 3 ports is required

Inlet Porting		
Port A	Port B	Port C
P16 = 1" NPTF	N = None	N = None
P20 = 1¼" NPTF	P16 = 1" NPTF	P2 = ⅛" NPTF
P24 = 1½" NPTF	P20 = 1¼" NPTF	P16 = 1" NPTF
P32 = 2" NPTF	P24 = 1½" NPTF	S16 = SAE-16
S16 = SAE-16	P32 = 2" NPTF	
S20 = SAE-20	S16 = SAE-16	
S24 = SAE-24	S20 = SAE-20	
S32 = SAE-32	S24 = SAE-24	
F20 = 1¼" SAE 4-bolt flange Code 61	S32 = SAE-32	
F24 = 1½" SAE 4-bolt flange Code 61	F20 = 1¼" SAE 4-bolt flange Code 61	
F32 = 2" SAE 4-bolt flange Code 61	F24 = 1½" SAE 4-bolt flange Code 61	
B24 = ISO 228 G-1½"	F32 = 2" SAE 4-bolt flange Code 61	
Flange port option only:		
M = Metric SAE 4 bolt flange	B24 = ISO 228 G-1½"	

Inlet Porting Location

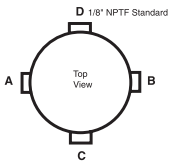

BOX 7A

Bypass Option
Omit = 25 psi bypass setting
RT and RTW models only:
40 = 40 psi bypass setting
50 = 50 psi bypass setting

BOX 7B

Outlet Porting Options
Omit = 1½" NPT male
C = Check valve
D = Diffuser
CD = Check Valve & Diffuser
T = 13" Tube ext.
A = Non-thread outlet

BOX 8

Dirt Alarm® Options		
		Omit = None
Located @ Port D	Visual	Y2 = Back-mounted tri-color gauge
	Electrical	ES = Electric Switch ES1 = Electric Switch with 24" wire leads ES2 = Electrical Switch with Deutsch Connector ES3 = Electric switch with DIN connector ES4 = Skydrol Compatible Electric Switch
Located in cap	Visual	Y2C = Bottom-mounted tri-color gauge Y5 = Back-mounted gauge in cap
Located @ Port C	Visual	Y2R = Back-mounted gauge mounted on opposite side of standard location
	Electrical	ESR = Electric switch mounted on opposite side of standard location ES1R = Heavy-duty electric switch mounted on opposite side of standard location

BOX 9

Add. Options
Omit = None
G2293 = Cork gasket
G547 = Two ⅛" gauge ports
G820 = Stamped cap

NOTES:

Box 1. RTW allows filter to be welded to tank instead of bolted.

Box 2. Number of elements must equal 1 when using KK or 27K elements.

Box 3. Replacement element part numbers are identical to contents of Boxes 2, 3, 4, and 5. Double and triple stacking of K-size elements can be replaced by single KK and 27K elements, respectively. ZW media not available in 27K length.

Box 5. For options H, W, and H.5 all aluminum parts are anodized. H.5 seal designation includes the following: EPR seals, stainless steel wire mesh on elements, and light oil coating on housing exterior. Skydrol® is a registered trademark of Solutia Inc.

Box 6. If using Port B, Port A & B must always be the same type and size. Example: (A) P20 (B) P20 (C) P16

Box 7B. See also "Accessories for Tank-Mounted Filters," page 307.

Tank-Mounted Filter (Inside Out Flow)

RTI

Model No. of filter in photograph is RTI3KZ10S24NP16Y2.

Features and Benefits

- Tank-mounted "Inside Out" flow filter
- Up to 3 inlet ports available
- Offered in pipe, SAE straight thread and flanged porting
- Various Dirt Alarm® options

120 gpm
455 L/min

100 psi
7 bar

Filter Housing Specifications

Flow Rating:	Up to 120 gpm (455 L/min) for 150 SUS (32 cSt) fluids
Max. Operating Pressure:	100 psi (7 bar)
Min. Yield Pressure:	400 psi (28 bar), per NFPA T2.6.1
Rated Fatigue Pressure:	Contact factory
Temp. Range:	-20°F to 225°F (-29°C to 107°C)
Bypass Setting:	Cracking: 25 psi (2 bar) Full Flow: 62 psi (4.3 bar)
Porting Head & Cap: Element Case:	Die Cast Aluminum Steel
Weight of RTI-KI: Weight of RTI-KKI:	11.4 lbs. (5.2 kg) 14.5 lbs. (6.6 kg)
Element Change Clearance:	KI Element = 9.0 (229 mm) KKI Element = 18.0 (457 mm) 27KI Element = 27.0 (686 mm)

Fluid Compatibility

Type Fluid	Appropriate Schroeder Media
Petroleum Based Fluids	All E media (cellulose), Z-Media® and ASP® media (synthetic)
High Water Content	All Z-Media® and ASP® media (synthetic)
Invert Emulsions	10 and 25 µ Z-Media® and 10 µ ASP® media (synthetic)
Water Glycols	3, 5, 10 and 25 µ Z-Media® and all ASP® media (synthetic)
Phosphate Esters	All Z-Media® (synthetic) with H (EPR) seal designation and all ASP® media (synthetic)
Skydrol®	3, 5, 10 and 25 µ Z-Media® (synthetic) with H.5 seal designation (EPR seals and stainless steel wire mesh in element, and light oil coating on housing exterior) and all ASP® media (synthetic)

Tank-Mounted Filter (Inside Out Flow)

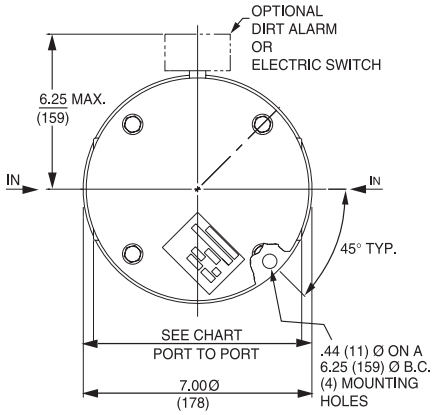

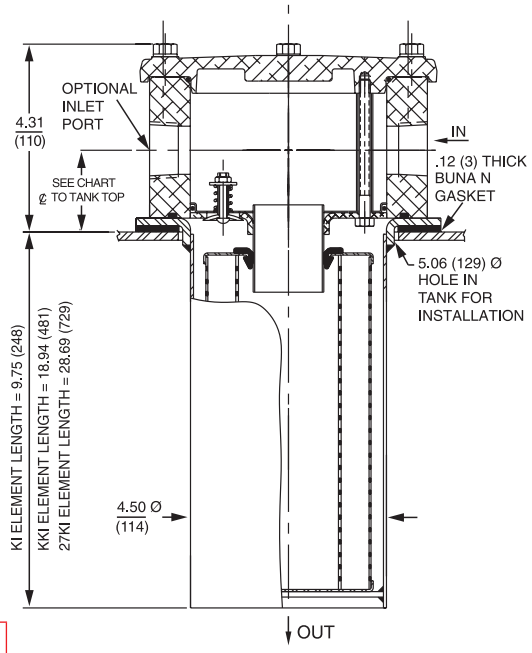

	1¼", 1½" Standard Ports	1½" Ports 4-Bolt Flange Only
Port to Port	6.38"	7.12"
℄ to Casting Base	1.56"	1.75"
℄ to Tank Top	1.88"	2.06"

Optional mounting rings available for tank welding. See page 307, reference part numbers A-LFT-813 and A-LFT-1448.

Metric dimensions in ( ).

Element Performance Information & Dirt Holding Capacity

	Filtration Ratio Per ISO 4572/NFPA T3.10.8.8 Using automated particle counter (APC) calibrated per ISO 4402			Filtration Ratio per ISO 16889 Using APC calibrated per ISO 11171	
Element	$ß_x \geq 75$	$ß_x \geq 100$	$ß_x \geq 200$	$ß_{x(c)} \geq 200$	$ß_{x(c)} \geq 1000$
KIZ1	<1.0	<1.0	<1.0	<4.0	4.2
KIZ3	<1.0	<1.0	<2.0	<4.0	4.8
KIZ10	<7.4	<8.2	<10.0	8.0	10.0

Element	DHC (gm)	Element	DHC (gm)	Element	DHC (gm)
KIZ1	85	KKIZ1	181	27KIZ1	276
KIZ3	88	KKIZ3	185	27KIZ3	283
KIZ10	<82	KKIZ10	174	27KIZ10	266

Element Collapse Rating: 100 psid (7 bar)

Flow Direction: Inside Out

Element Nominal Dimensions: KI: 3.9" (99 mm) O.D. x 9.0" (230 mm) long
KKI: 3.9" (99 mm) O.D. x 18.0" (460 mm) long
27KI: 3.9" (99 mm) O.D. x 27.0" (690 mm) long

Pressure Drop Information

Based on Flow Rate and Viscosity

$\Delta P_{housing}$

RTI $\Delta P_{housing}$ for fluids with sp gr (specific gravity) = 0.86:

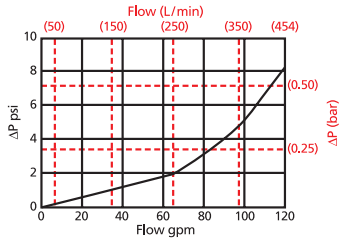

$\Delta P_{element}$

KIZ

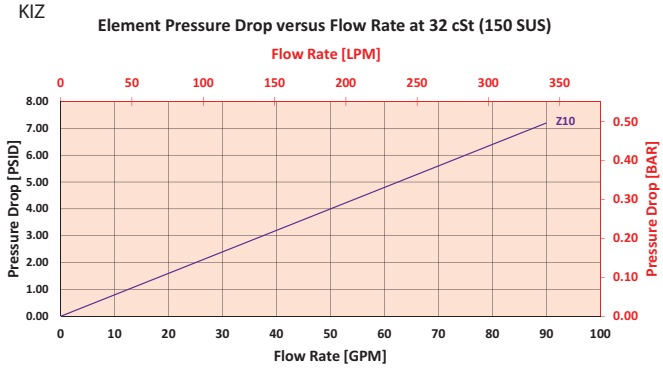

KKIZ

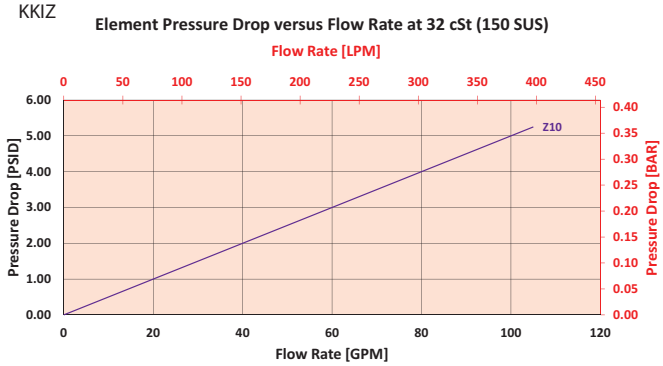

$$\Delta P_{filter} = \Delta P_{housing} + (\Delta P_{element} * V_f)$$

Exercise:

Determine ΔP_{filter} at 80 gpm (303.2 L/min) for RTIKIZ10S20S20NY2 using 160 SUS (34 cSt) fluid.

Use the housing pressure curve to determine $\Delta P_{housing}$ at 80 gpm. In this case, $\Delta P_{housing}$ is 3 psi (.21 bar) on the graph for the RTI housing.

Use the element pressure curve to determine $\Delta P_{element}$ at 80 gpm. In this case, $\Delta P_{element}$ is 6.5 psi (.45 bar) according to the graph for the KIZ10 element.

Because the viscosity in this sample is 160 SUS (34 cSt), we determine the Viscosity Factor (V_f) by dividing the Operating Fluid Viscosity with the Standard Viscosity of 150 SUS (32 cSt). To best determine your Operating Fluid Viscosity, please reference the chart in Appendix D.

Finally, the overall filter pressure differential, ΔP_{filter}, is calculated by adding $\Delta P_{housing}$ with the true element pressure differential, ($\Delta P_{element} * V_f$). The $\Delta P_{element}$ from the graph has to be multiplied by the viscosity factor to get the true pressure differential across the element.

Solution:

$\Delta P_{housing}$ = 3 psi [.21 bar] | $\Delta P_{element}$ = 6.5 psi [.45 bar]

V_f = 160 SUS (34 cSt) / 150 SUS (32 cSt) = 1.1

ΔP_{filter} = 3 psi + (6.5 psi * 1.1) = 10.2 psi

OR

ΔP_{filter} = .21 bar + (.45 bar * 1.1) = .71 bar

Note:
If your element is not graphed, use the following equation:
$\Delta P_{element}$ = Flow Rate x $\Delta P_{f.}$ Plug this variable into the overall pressure drop equation.

Ele.	ΔP
KIAS10	0.08
KKIAS10	0.05
27KIAS10/ 27KIAS10	0.04

RTI Tank-Mounted Filter (Inside Out Flow)

Filter Model Number Selection

How to Build a Valid Model Number for a Schroeder RTI:

BOX 1		BOX 2		BOX 3		BOX 4		BOX 5		BOX 6
RTI	–		–		–		–		–	

Example: NOTE: Only box 6 may contain more than one option

BOX 1		BOX 2		BOX 3		BOX 4		BOX 5		BOX 6	
RTI	–	KIZ10	–		–	S20 S20 N	–	Y2	–		= RTIKIZ10S20S20NY2

BOX 1

Filter Series
RTI

BOX 2

Element Part Number			
K Length	KK Length	27K Length	
KIZ1	KKIZ1	27KIZ1	= 1 µ Excellement® Z-Media® and ASP® media (synthetic)
KIZ3	KKIZ3	27KIZ3	= 3 µ Excellement® Z-Media® and ASP® media (synthetic)
KIZ10	KKIZ10	27KIZ10	= 10 µ Excellement® Z-Media® and ASP® media (synthetic)

BOX 3

Seal Material
Omit = Buna N
H = EPR
W = Anodized Aluminum Parts
H.5 = Skydrol® Compatibility

Inlet Porting Location
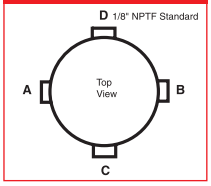

BOX 4 Specification of all 3 ports is required

Inlet Porting		
Port A	Port B	Port C
P16 = 1" NPTF	N = None	N = None
P20 = 1¼" NPTF	P16 = 1" NPTF	P2 = ⅛" NPTF
P24 = 1½" NPTF	P20 = 1¼" NPTF	P16 = 1" NPTF
S16 = SAE-16	P24 = 1½" NPTF	S16 = SAE-16
S20 = SAE-20	S16 = SAE-16	
S24 = SAE-24	S20 = SAE-20	
F20 = 1¼" SAE 4-bolt flange Code 61	S24 = SAE-24	
F24 = 1½" SAE 4-bolt flange Code 61	F20 = 1¼" SAE 4-bolt flange Code 61	
	F24 = 1½" SAE 4-bolt flange Code 61	

BOX 5

Dirt Alarm® Options		
		Omit = None
Located @ Port D	Visual	Y2 = Back-mounted tri-color gauge
	Electrical	ES = Electric switch ES1 = Heavy-duty electric switch with conduit connector ES2 = Electrical Switch with Deutsch Connector
Located in cap	Visual	Y2C = Bottom-mounted tri-color gauge Y5 = Back-mounted gauge in cap
Located @ Port C	Visual	Y2R = Back-mounted gauge mounted on opposite side of standard location
	Electrical	ESR = Electric switch mounted on opposite side of standard location ES1R = Heavy-duty electric switch with conduit connector

BOX 6

Additional Options
Omit = None
G547 = Two ⅛" gauge ports
M = Metric thread for SAE 4-bolt flange mounting holes (specify after each port designation)

NOTES:

Box 2. Replacement element part numbers are identical to contents of Boxes 2 and 3.

Box 3. For options H, W, and H.5, all aluminum parts are anodized. H.5 seal designation includes the following: EPR seals, stainless steel wire mesh on elements, and light oil coating on housing exterior. Skydrol® is a registered trademark of Solutia Inc.

Box 4. If using Port B, Port A & B must always be the same type and size. Example: (A) P20 (B) P20 (C) P16

Box 6. See also "Accessories for Tank-Mounted Filters," page 307.

Tank-Mounted Filter LRT

Model No. of filter in photograph is LRT18LZ10S24NP16Y2.

Features and Benefits

- Low pressure tank-mounted filter
- Multiple inlet/outlet porting options
- Top, side or bottom mounting
- Optional check valve prevents reservoir siphoning
- Can also be used in return line application (contact factory)
- Visual gauge or electrical switch dirt alarms
- Offered in pipe, SAE straight thread, flanged and ISO 228 porting
- Same day shipment model available
- Also available with DirtCatcher® elements (18LD)
- G Available with quality-protected GeoSeal® Elements (GLRT)

150 gpm
570 L/min
100 psi
7 bar

Filter Housing Specifications

Flow Rating:	Up to 150 gpm (570 L/min) for 150 SUS (32 cSt) fluids
Max. Operating Pressure:	100 psi (7 bar)
Min. Yield Pressure:	400 psi (28 bar), per NFPA T2.6.1
Rated Fatigue Pressure:	90 psi (6 bar), per NFPA T2.6.1-2005
Temp. Range:	-20°F to 225°F (-29°C to 107°C)
Bypass Setting:	Cracking: 25 psi (1.7 bar) Full Flow: 34 psi (2.3 bar)
Porting Head & Cap: Element Case:	Die Cast Aluminum Steel
Weight of LRT-18L:	14.6 lbs. (6.6 kg)
Element Change Clearance:	17.0" (432 mm)

Fluid Compatibility

Type Fluid	Appropriate Schroeder Media
Petroleum Based Fluids	All E media (cellulose) and Z-Media® (synthetic)
High Water Content	All Z-Media® (synthetic)
Invert Emulsions	10 and 25 µ Z-Media® (synthetic)
Water Glycols	3, 5, 10 and 25 µ Z-Media® (synthetic)
Phosphate Esters	All Z-Media® (synthetic) with H (EPR) seal designation
Skydrol®	3, 5, 10 and 25 µ Z-Media® (synthetic) with H.5 seal designation (EPR seals and stainless steel wire mesh in element, and light oil coating on housing exterior)

Tank-Mounted Filter

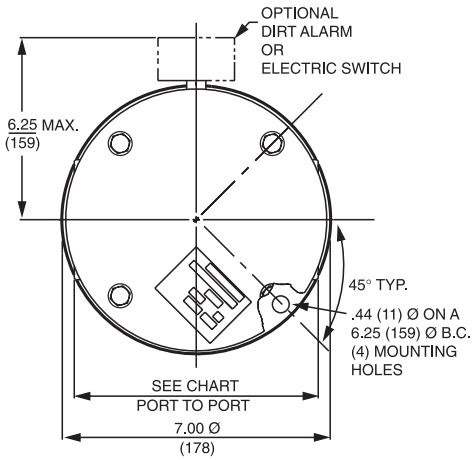

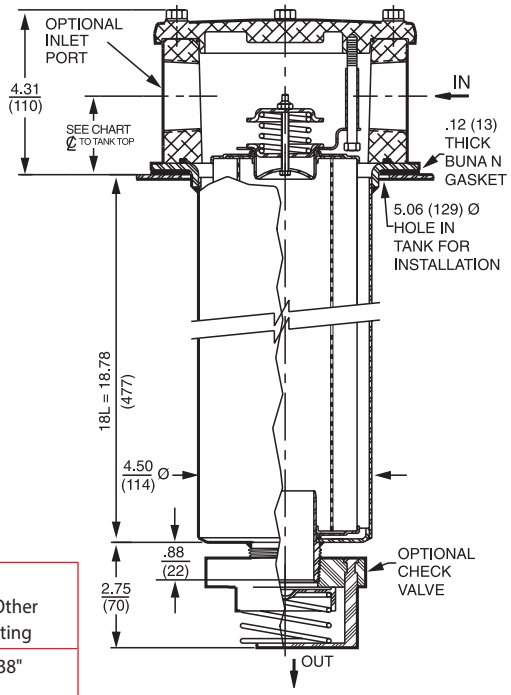

	1½" Ports 4-Bolt Flange Only	2" Ports	All Other Porting
Port to Port	7.12"	7.56" (P, S, B) 7.38" (F)	6.38"
℄ to Casting Base	1.75"	1.81"	1.56"
℄ to Tank Top	2.06"	2.12"	1.88"

Optional mounting ring available to weld to tank.

Metric dimensions in ( ).

Element Performance Information & Dirt Holding Capacity

Element	Filtration Ratio Per ISO 4572/NFPA T3.10.8.8 Using automated particle counter (APC) calibrated per ISO 4402			Filtration Ratio per ISO 16889 Using APC calibrated per ISO 11171	
	$ß_x \geq 75$	$ß_x \geq 100$	$ß_x \geq 200$	$ß_x(c) \geq 200$	$ß_x(c) \geq 1000$
18LZ1	<1.0	<1.0	<1.0	<4.0	4.2
18LZ3	<1.0	<1.0	<2.0	<4.0	4.8
18LZ5	2.5	3.0	4.0	4.8	6.3
18LZ10	7.4	8.2	10.0	8.0	10.0
18LZ25	18.0	20.0	22.5	19.0	24.0

Element	DHC (gm)	Element	DHC (gm)
18LZ1	224	18LDZ1	194
18LZ3	230	18LDZ3	199
18LZ5	238	18LDZ5	194
18LZ10	216	18LDZ10	186
18LZ25	186	18LDZ25	169

Element Collapse Rating: 150 psid (10 bar)
Flow Direction: Outside In
Element Nominal Dimensions: 4.0" (100 mm) O.D. x 18.5" (470 mm) long

Pressure Drop Information

Based on Flow Rate and Viscosity

$\Delta P_{housing}$

LRT $\Delta P_{housing}$ for fluids with sp gr (specific gravity) = 0.86:

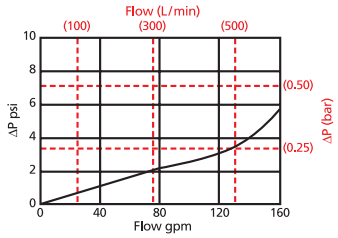

$\Delta P_{element}$

18LZ

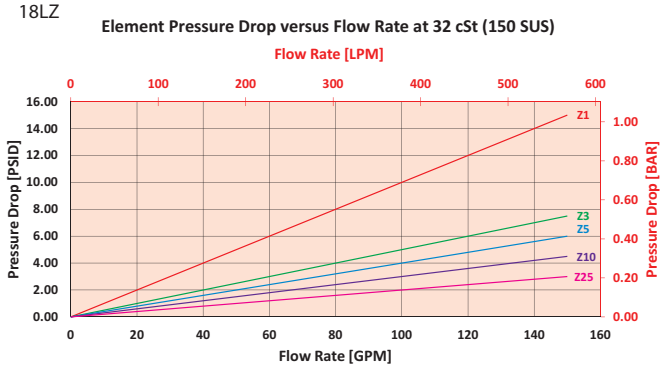

$$\Delta P_{filter} = \Delta P_{housing} + (\Delta P_{element} * V_f)$$

Exercise:

Determine ΔP_{filter} at 120 gpm (379 L/min) for LRT18LZ10S24S24NY2 using 160 SUS (34 cSt) fluid.

Use the housing pressure curve to determine $\Delta P_{housing}$ at 120 gpm. In this case, $\Delta P_{housing}$ is 3 psi (.21 bar) on the graph for the LRT housing.

Use the element pressure curve to determine $\Delta P_{element}$ at 120 gpm. In this case, $\Delta P_{element}$ is 4 psi (.27 bar) according to the graph for the 18LZ10 element.

Because the viscosity in this sample is 160 SUS (34 cSt), we determine the Viscosity Factor (V_f) by dividing the Operating Fluid Viscosity with the Standard Viscosity of 150 SUS (32 cSt). To best determine your Operating Fluid Viscosity, please reference the chart in Appendix D.

Finally, the overall filter pressure differential, ΔP_{filter}, is calculated by adding $\Delta P_{housing}$ with the true element pressure differential, ($\Delta P_{element} * V_f$). The $\Delta P_{element}$ from the graph has to be multiplied by the viscosity factor to get the true pressure differential across the element.

Solution:

$\Delta P_{housing}$ = 8 psi [.55 bar] | $\Delta P_{element}$ = 4 psi [.27 bar]

V_f = 160 SUS (34 cSt) / 150 SUS (32 cSt) = 1.1

ΔP_{filter} = 3 psi + (4 psi * 1.1) = 7.4 psi

OR

ΔP_{filter} = .21 bar + (.27 bar * 1.1) = .51 bar

Note:
If your element is not graphed, use the following equation:
$\Delta P_{element}$ = Flow Rate x $\Delta P_{f.}$ Plug this variable into the overall pressure drop equation.

Ele.	ΔP
18LDZ1	0.12
18LDZ3	0.06
18LDZ5	0.05
18LDZ10	0.03
18LDZ25	0.02

LRT Tank-Mounted Filter

Filter Model Number Selection

Highlighted product eligible for QuickDelivery

How to Build a Valid Model Number for a Schroeder LRT:

BOX 1	BOX 2	BOX 3	BOX 4	BOX 5	BOX 6A	BOX 6B	BOX 7	BOX 8
LRT –	–	–	–	–	–	–	–	–

Example: NOTE: Only box 8 may contain more than one option

BOX 1	BOX 2	BOX 3	BOX 4	BOX 5	BOX 6A	BOX 6B	BOX 7	BOX 8	
LRT –	18 –	LZ10 –	–	S24 S24 N –	–	–	Y2 –	–	= LRT18LZ10S24S24NY2

BOX 1

Filter Series
LRT
GLRT (GeoSeal®)

BOX 2

Element Length (in)
18

BOX 3

Element Size and Media
L3 = L size 3 µ E media (cellulose)
L10 = L size 10 µ E media (cellulose)
LZ1 = L size 1 µ Excellement® Z-Media® (synthetic)
LZ3 = L size 3 µ Excellement® Z-Media® (synthetic)
LZ5 = L size 5 µ Excellement® Z-Media® (synthetic)
LZ10 = L size 10 µ Excellement® Z-Media® (synthetic)
LZ25 = L size 25 µ Excellement® Z-Media® (synthetic)
LDZ1 = L size DirtCatcher® 1 µ Excellement® Z-Media®
LDZ3 = L size DirtCatcher® 3 µ Excellement® Z-Media®
LDZ5 = L size DirtCatcher® 5 µ Excellement® Z-Media®
LDZ10 = L size DirtCatcher® 10 µ Excellement® Z-Media®
LDZ25 = L size DirtCatcher® 25 µ Excellement® Z-Media®
GeoSeal® Element Options
LGZ1 = L size 1 µ Excellement® Z-Media® (synthetic)
LGZ3 = L size 3 µ Excellement® Z-Media® (synthetic)
LGZ5 = L size 5 µ Excellement® Z-Media® (synthetic)
LGZ10 = L size 10 µ Excellement® Z-Media® (synthetic)
LGZ25 = L size 25 µ Excellement® Z-Media® (synthetic)

BOX 4

Seal Material
Omit = Buna N
H = EPR
W = Anodized Aluminum Parts
H.5 = Skydrol® compatibility

BOX 5
Specification of all 3 ports is required

Inlet Porting		
Port A	Port B	Port C
P16 = 1" NPTF	N = None	N = None
P20 = 1¼" NPTF	P16 = 1" NPTF	P2 = ⅛" NPTF
P24 = 1½" NPTF	P20 = 1¼" NPTF	P16 = 1" NPTF
P32 = 2" NPTF	P24 = 1½" NPTF	S16 = SAE-16
S16 = SAE-16	P32 = 2" NPTF	
S20 = SAE-20	S16 = SAE-16	
S24 = SAE-24	S20 = SAE-20	
S32 = SAE-32	S24 = SAE-24	
F20 = 1¼" SAE 4-bolt flange Code 61	S32 = SAE-32	
F24 = 1½" SAE 4-bolt flange Code 61	F20 = 1¼" SAE 4-bolt flange Code 61	
F32 = 2" SAE 4-bolt flange Code 61	F24 = 1½" SAE 4-bolt flange Code 61	
B24 = ISO 228 G-1½"	F32 = 2" SAE 4-bolt flange Code 61	
Flange port option only:	B24 = ISO 228 G-1½"	
M = Metric SAE 4 bolt flange		

Inlet Porting Location

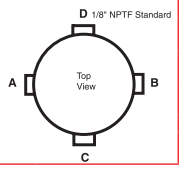

BOX 6A

Bypass Option
Omit = 25 psi bypass setting
40 = 40 psi bypass setting

BOX 6B

Outlet Porting Options
Omit = 2" NPT male
C = Check valve
D = Diffuser
T = 13" Tube ext.
A = Non-thread outlet

BOX 7

Dirt Alarm® Options		
		Omit = None
Located @ Port D	Visual	Y2 = Back-mounted tri-color gauge
	Electrical	ES = Electric switch ES1 = Heavy-duty electric switch with conduit connector ES2 = Electrical Switch with Deutsch Connector ES3 = Electric Switch with DIN 43650
Located in cap	Visual	Y2C = Bottom-mounted tri-color gauge Y5 = Back-mounted gauge in cap
Located @ Port C	Visual	Y2R = Back-mounted gauge mounted on opposite side of standard location
	Electrical	ESR = Electric switch mounted on opposite side of standard location ES1R = Heavy-duty electric switch with conduit connector

BOX 8

Add. Options
Omit = None
G2293 = Cork gasket
G547 = Two ⅛" gauge ports
G820 = Stamped cap

NOTES:

Box 2. Replacement element part numbers are a combination of Boxes 2, 3, and 4. Example: 18LZ10

Box 4. For options H, W, and H.5, all aluminum parts are anodized. H.5 seal designation includes the following: EPR seals, stainless steel wire mesh on elements, and light oil coating on housing exterior. Skydrol® is a registered trademark of Solutia Inc.

Box 5. If using Port B, Port A & B must always be the same type and size. Example: (A) P20 (B) P20 (C) P16.

Box 6. See also "Accessories for Tank-Mounted Filters," page 307.

Tank-Mounted Filter ART

Model No. of filter in photograph is ART85Z10F43.

Features and Benefits

- Compact, lightweight, low pressure tank mounted filter ideal for mobile applications
- Lightweight plastic bowl
- ART aluminum alloy is designed to be water tolerant - anodization is not required for use with water based fluids (HWCF).
- Special filter element design provides aftermarket benefits.
- Various Dirt Alarm® options

225 gpm
850 L/min
145 psi
10 bar

Filter Housing Specifications

Flow Rating:	Up to 225 gpm (850 L/min) for 150 SUS (32 cSt) fluids
Max. Operating Pressure:	145 psi (10 bar)
Min. Yield Pressure:	535 psi (37 bar), per NFPA T2.6.1
Rated Fatigue Pressure:	145 psi (10 bar), per NFPA T2.6.1
Temp. Range:	-20°F to 225°F (-29°C to 107°C)
Bypass Setting:	Cracking: 43 psi (3 bar) Full Flow: 69 psi (4.75 bar)
Porting Head & Cap: Element Case:	Aluminum Plastic
Weight of ART:	15 lbs. (7 kg)
Element Change Clearance:	16.39" (340 mm)

Fluid Compatibility

Type Fluid	Appropriate Schroeder Media
Petroleum Based Fluids	All Z-Media® (synthetic)
High Water Content	All Z-Media® (synthetic)

Tank-Mounted Filter

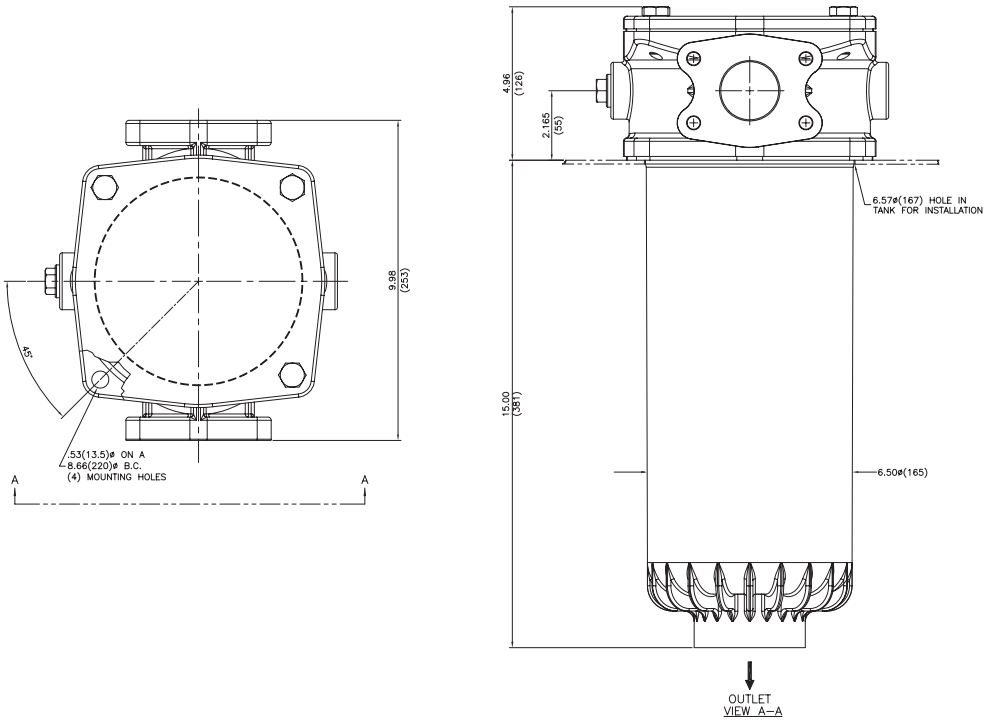

Metric dimensions in ( ).

Element Performance Information & Dirt Holding Capacity

Element	Filtration Ratio per ISO 16889 Using APC calibrated per ISO 11171 $\beta_x(c) \geq 200$	$\beta_x(c) \geq 1000$
85Z1	<4.0	4.2
85Z3	<4.0	4.8
85Z5	4.8	6.3
85Z10	8.0	10.0
85Z25	19.0	24.0

Element	DHC (gm)
85Z1	185
85Z3	147
85Z5	206
85Z10	164
85Z25	167

Element Collapse Rating: 150 psid (10 bar)

Flow Direction: Outside In

Element Nominal Dimensions: 4.5" (114.3 mm) O.D. x 13.8" (350.52 mm) long

Pressure Drop Information

Based on Flow Rate and Viscosity

$\Delta P_{housing}$

ART $\Delta P_{housing}$ for fluids with sp gr (specific gravity) = 0.86:

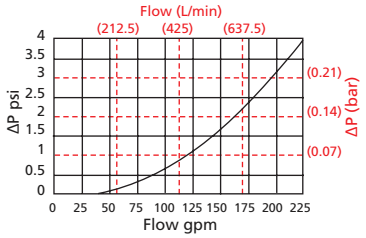

$\Delta P_{element}$

85Z

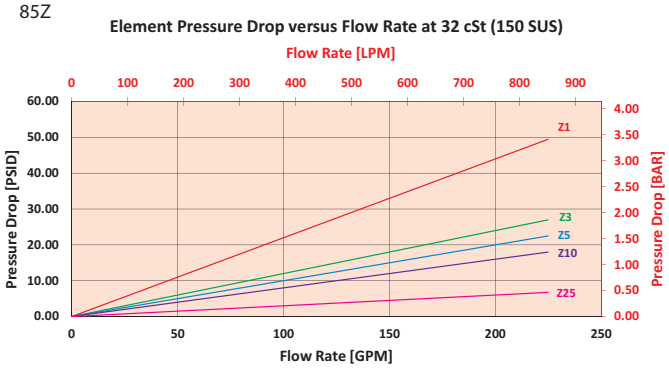

$$\Delta P_{filter} = \Delta P_{housing} + (\Delta P_{element} * V_f)$$

Exercise:

Determine ΔP_{filter} at 120 gpm (379 L/min) for ART85Z10F43Y2 using 160 SUS (34 cSt) fluid.

Use the housing pressure curve to determine $\Delta P_{housing}$ at 120 gpm. In this case, $\Delta P_{housing}$ is 1 psi (.07 bar) on the graph for the ART housing.

Use the element pressure curve to determine $\Delta P_{element}$ at 120 gpm. In this case, $\Delta P_{element}$ is 10 psi (.69 bar) according to the graph for the 85Z10 element.

Because the viscosity in this sample is 160 SUS (34 cSt), we determine the Viscosity Factor (V_f) by dividing the Operating Fluid Viscosity with the Standard Viscosity of 150 SUS (32 cSt). To best determine your Operating Fluid Viscosity, please reference the chart in Appendix D.

Finally, the overall filter pressure differential, ΔP_{filter}, is calculated by adding $\Delta P_{housing}$ with the true element pressure differential, ($\Delta P_{element}$*V_f). The $\Delta P_{element}$ from the graph has to be multiplied by the viscosity factor to get the true pressure differential across the element.

Solution:

$\Delta P_{housing}$ = 1 psi [.07 bar] | $\Delta P_{element}$ = 10 psi [.69 bar]

V_f = 160 SUS (34 cSt) / 150 SUS (32 cSt) = 1.1

ΔP_{filter} = 1 psi + (10 psi * 1.1) = 12 psi

OR

ΔP_{filter} = .07 bar + (.69 bar * 1.1) = .83 bar

ART Tank-Mounted Filter

Filter Model Number Selection

How to Build a Valid Model Number for a Schroeder ART:

BOX 1		BOX 2		BOX 3		BOX 4		BOX 5		BOX 6		BOX 7
ART	–		–		–		–		–		–	

Example: NOTE: One option per box

BOX 1		BOX 2		BOX 3		BOX 4		BOX 5		BOX 6		BOX 7	
ART	–	85Z10	–		–	F	–	43	–		–	Y2	= ART85Z10F43Y2

BOX 1

Filter Series
ART

BOX 2

Element Size and Media	
85Z1	= 1 µ Excellement® Z-Media® (synthetic)
85Z3	= 3 µ Excellement® Z-Media® (synthetic)
85Z5	= 5 µ Excellement® Z-Media® (synthetic)
85Z10	= 10 µ Excellement® Z-Media® (synthetic)
85Z25	= 25 µ Excellement® Z-Media® (synthetic)

BOX 3

Seal Material
Omit = Buna N
H = EPR

BOX 4

Porting
F = 2½" SAE-40 4-bolt flange Code 61
FF = Dual 2½" SAE-40 4-bolt flange Code 61
S = SAE-32
SS = Dual SAE-32

BOX 5

Bypass Setting
43 = 43 psi Bypass

BOX 6

Outlet Options
Omit = 2" Threadless Outlet

BOX 7

Dirt Alarm® Options		
	Omit =	None
Visual	Y2 =	Back-mounted tri-color gauge
	Y2R =	Back-mounted gauge mounted on opposite side of standard location
Electrical	ES =	Electric switch (normally open)
	ESR =	Electric switch mounted on opposite side of standard location
	ES1 =	Heavy-duty electric switch with conduit connector
	ES1R =	Heavy-duty electric switch with conduit connector mounted on opposite side of standard location
	ES2 =	Super duty electric switch with Thermal Lockout and 2 pin Deutsche connector (DT04-2P, SPST, normally closed)

NOTES:

Box 2. Replacement element part numbers are identical to contents of Boxes 2 and 3.

Box 3. For option H, all aluminum parts are anodized.

Return Line Filter BRT

Model No. of filter in photograph is BRT6RBZ102.

Features and Benefits

- Filter is mounted in the tank and flow comes to it from a pipe connection below it or from the side
- Optimal flow conditions created by flow from beneath guaranteeing optimal air separation, even tank mixing, and long element service intervals
- Patented de-aeration windows around the housing offer superior air bubble coalescence in a 360 degree discharge
- Quality Protected Inside-Out Flow Element Design

Part of the Schroeder Industries Energy Sustainability Initiative

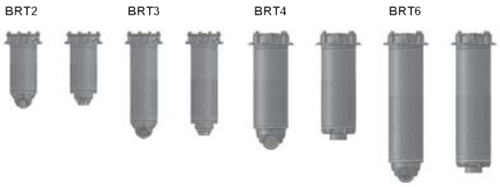

to 160 gpm
to 600 L/min
to 145 psi
to 10 bar

Filter Housing Specifications

Flow Rating:	Up to 160 gpm (600 L/min) for 150 SUS (32 cSt) fluids
Max. Operating Pressure:	145 psi (10 bar)
Temp. Range:	-22°F to 248°F (-30°C to 120°C)
Bypass Setting:	Cracking: 36 psi (2.5 bar)
Filter Head & Cover: Inlet Section:	BRT 2 - 6: Aluminum Nylon (PA66)
Seals	Buna N
Installation:	As in-tank filter

Fluid Compatibility

Type Fluid	Appropriate Schroeder Media
Hydraulic Oils	Schroeder Z-Media® (synthetic)
Lubrication Oils	Schroeder Z-Media® (synthetic)
Compressor Oils	Schroeder Z-Media® (synthetic)
Biodegradable Operating Fluids	Schroeder Z-Media® (synthetic)

Return Line Filter

Dimensions BRT2 - BRT3

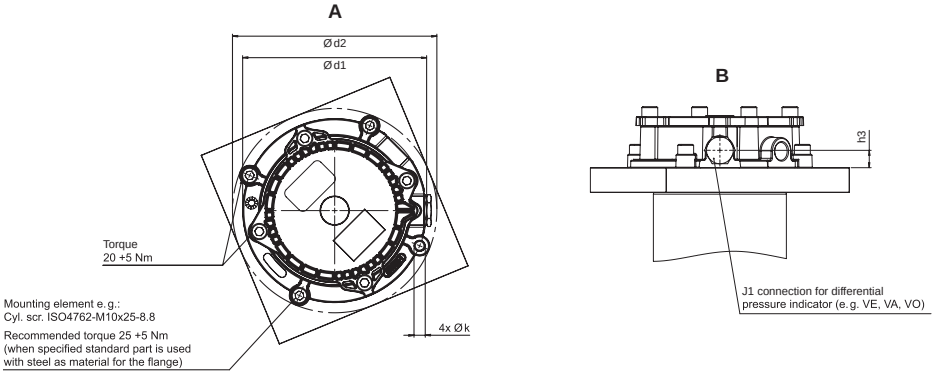

Housing closure V

Housing connection H

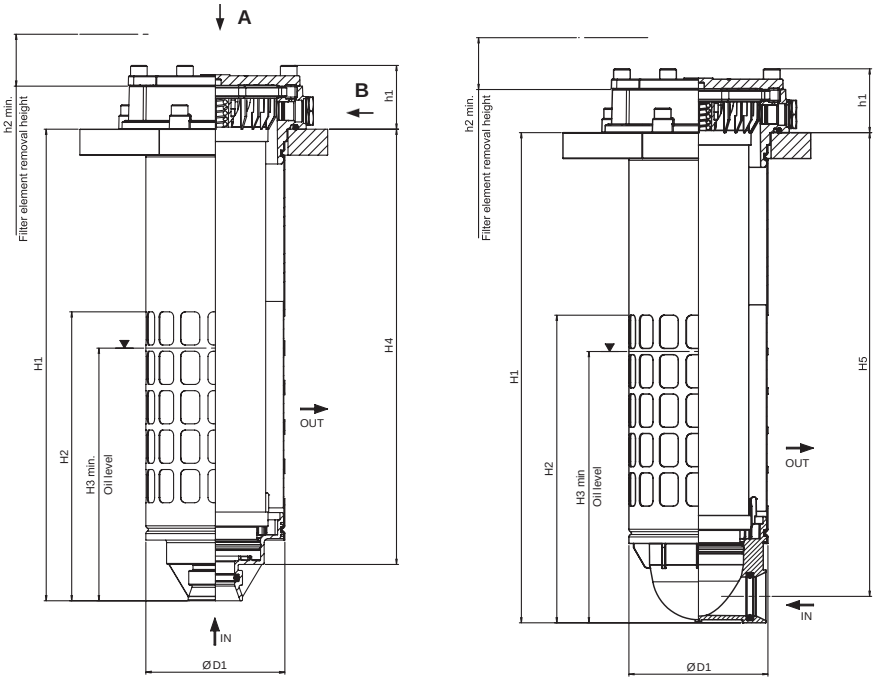

Type	Design	Connection pos.	H1	H2	H3	H4	H5	h1	h2	h3	ØD1	Ød1	Ød2	Øk	Weight [kg]
RFB 0170	Diffuser with opening	H	322.5	220.5	186	–	297	61.5	300	17.5	134	180	200	10.5	3.3
	Diffuser with opening	V	304.5	202.5	168	269.5	–								3.2
RFB 0300	Diffuser with opening	H	472.5	296.5	262	–	447		450						3.9
	Diffuser with opening	V	454.5	278.5	244	419.5	–								4.0

Element Performance Information

Element	Filtration Ratio Per ISO 4572/NFPA T3.10.8.8 Using automated particle counter (APC) calibrated per ISO 4402			Filtration Ratio per ISO 16889 Using APC calibrated per ISO 11171	
	$ß_x \geq 75$	$ß_x \geq 100$	$ß_x \geq 200$	$ß_x(c) \geq 200$	$ß_x(c) \geq 1000$
2RBZ10	C/F	C/F	C/F	C/F	11.2
2RBZ25	C/F	C/F	C/F	C/F	16.2
3RBZ10	C/F	C/F	C/F	C/F	11.2
3RBZ25	C/F	C/F	C/F	C/F	16.2
4RBZ10	C/F	C/F	C/F	C/F	11.2
4RBZ25	C/F	C/F	C/F	C/F	16.2
6RBZ10	C/F	C/F	C/F	C/F	11.2
6RBZ25	C/F	C/F	C/F	C/F	16.2

Metric dimensions mm ( ).

Dimensions BRT4 - BRT6

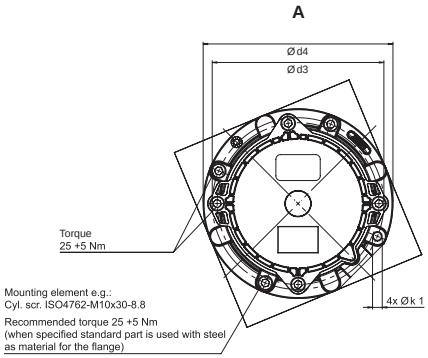

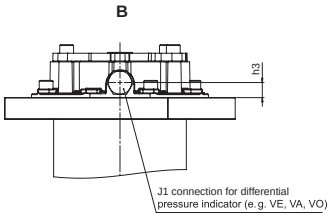

Housing closure V

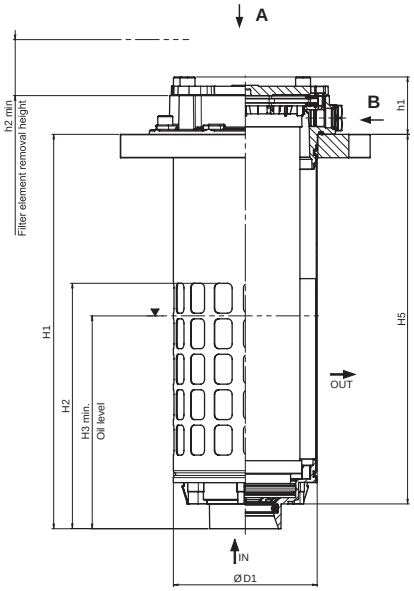

Housing connection H

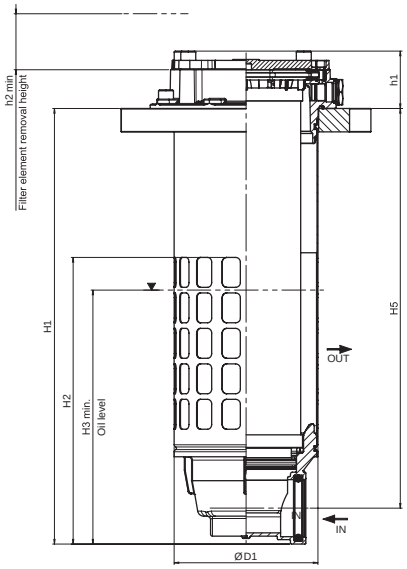

Type	Design	Connection pos.	H1	H2	H3	H4	H5	h1	h2	h3	ØD1	Ød1	Ød2	Øk1	Weight [kg]
RFB 0400	Diffuser with opening	H	466.5	307	234	–	428	61.5	430	17.5	154	185.7	205	10.5	4.5
	Diffuser with opening	V	422.4	262.6	182	393.8	–								4.3
RFB 0600	Diffuser with opening	H	613.7	383.2	310	–	575.2		580						5.5
	Diffuser with opening	V	561.6	331.1	258	541	–								5.3

Element Dirt Holding Capacity & Burst Rating

Element	DHC (g)	Element	DHC (g)
2RBZ10	70.4	4RBZ10	152.5
2RBZ25	77.8	4RBZ25	173.4
3RBZ10	114.3	6RBZ10	190.4
3RBZ25	128.3	6RBZ25	231.7

Element Burst Rating: 87 psi (6 bar) for standard elements
Flow Direction: Inside Out

Metric dimensions mm ( ).

Return Line Filter

Dimensions BRT2 - BRT3

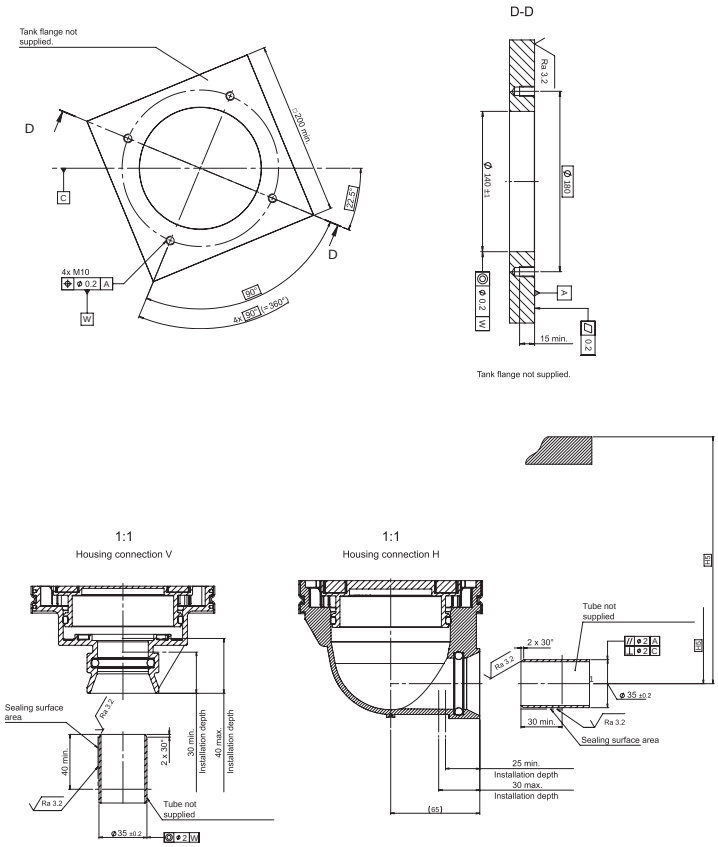

Dimensions BRT4 - BRT6

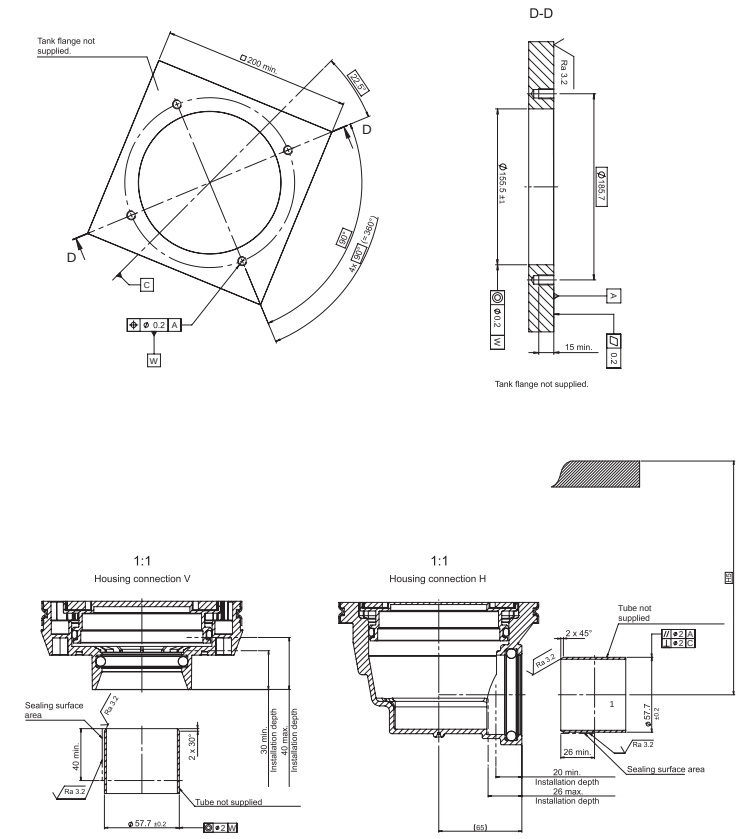

Metric dimensions mm ( ).

Pressure Drop Information

Based on Flow Rate and Viscosity

$\Delta P_{element}$

BRT2

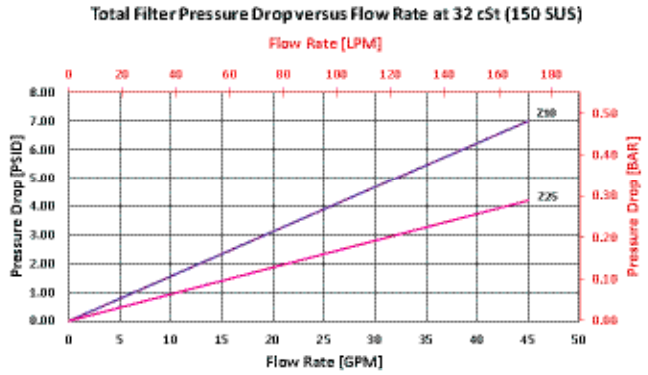

BRT3

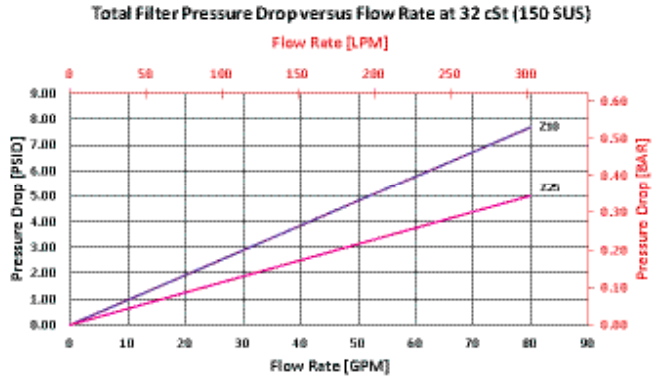

BRT4

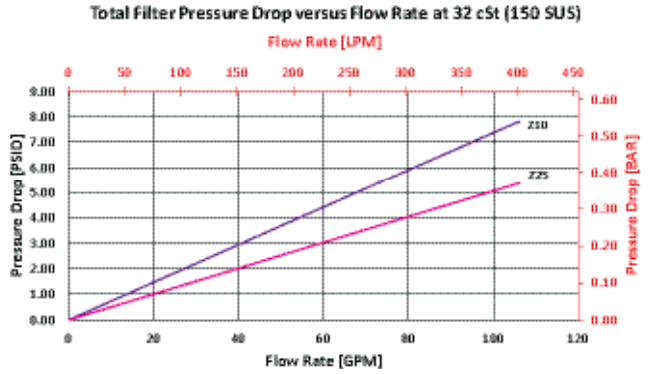

BRT6

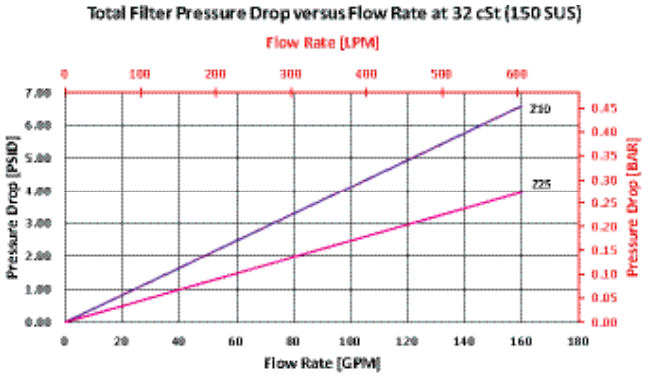

Return Line Filter

Filter Model Number Selection

How to Build a Valid Model Number for a Schroeder BRT:

BOX 1		BOX 2		BOX 3		BOX 4		BOX 5		BOX 6		BOX 7
BRT	–		–		–		–		–		–	

Example: NOTE: One option per box

BOX 1		BOX 2		BOX 3		BOX 4		BOX 5		BOX 6		BOX 7	
BRT	–	3RB	–	Z	–	10	–		–	1	–		= BRT3RBZ101Y2

BOX 1

Filter Series
BRT

BOX 2

Size of Element
2RB
3RB
4RB
6RB

BOX 3

Element Media Type
Z = Excellement® Z-Media® (synthetic)

BOX 4

Micron Rating
10 = 10 µm
25 = 25 µm

BOX 5

Seal Material
Omit = Buna N
V = Viton®

BOX 6

Inlet Porting
2 = side inlet
1 = bottom inlet

BOX 7

Dirt Alarm® Options	
	Omit = No Indicator, sealed up w/ screw plug
Clogging Indicators	VA = visual/electrical
	VE = electrical
	VO = visual

Return Line Filter TRT

Model No. of filter in photograph is TRT3RTZ10MS.

Features and Benefits

- Filter head is mounted on the tank like a standard return-line filter solution
- The protective tube can be supplied in various optional versions: 1.) as a closed tube with the outlet opening facing downwards or with a closed base and rows of operating holes at the height of the tank's oil level 2.) with an optional magnetic core connected to the filter element guaranteeing effective magnetic pre-filtration
- Patented de-aeration windows around the housing offer superior air bubble coalescence in a 360 degree discharge
- Quality Protected Element Design

Part of the Schroeder Industries Energy Sustainability Initiative

TRT1 TRT2 TRT3 TRT4

up to 100 gpm
up to 380 L/min
to 145 psi
to 10 bar

Filter Housing Specifications

Flow Rating:	Up to 100 gpm (400 L/min) for 150 SUS (32 cSt) fluids
Max. Operating Pressure:	145 psi (10 bar)
Temp. Range:	-22°F to 248°F (-30°C to 120°C)
Bypass Setting:	Cracking: 36 psi (2.5 bar)
Filter Head & Cover:	Aluminum
Filter Housing:	Steel
Inlet Section:	Nylon (PA66)
Seals:	Buna N and Viton
Installation:	As in-tank filter

Fluid Compatibility

Type Fluid	Appropriate Schroeder Media
Hydraulic Oils	Schroeder Z-Media® (synthetic)
Lubrication Oils	Schroeder Z-Media® (synthetic)
Compressor Oils	Schroeder Z-Media® (synthetic)
Biodegradable Operating Fluids	Schroeder Z-Media® (synthetic)

Return Line Filter

Dimensions TRT1, 2, 3, 4

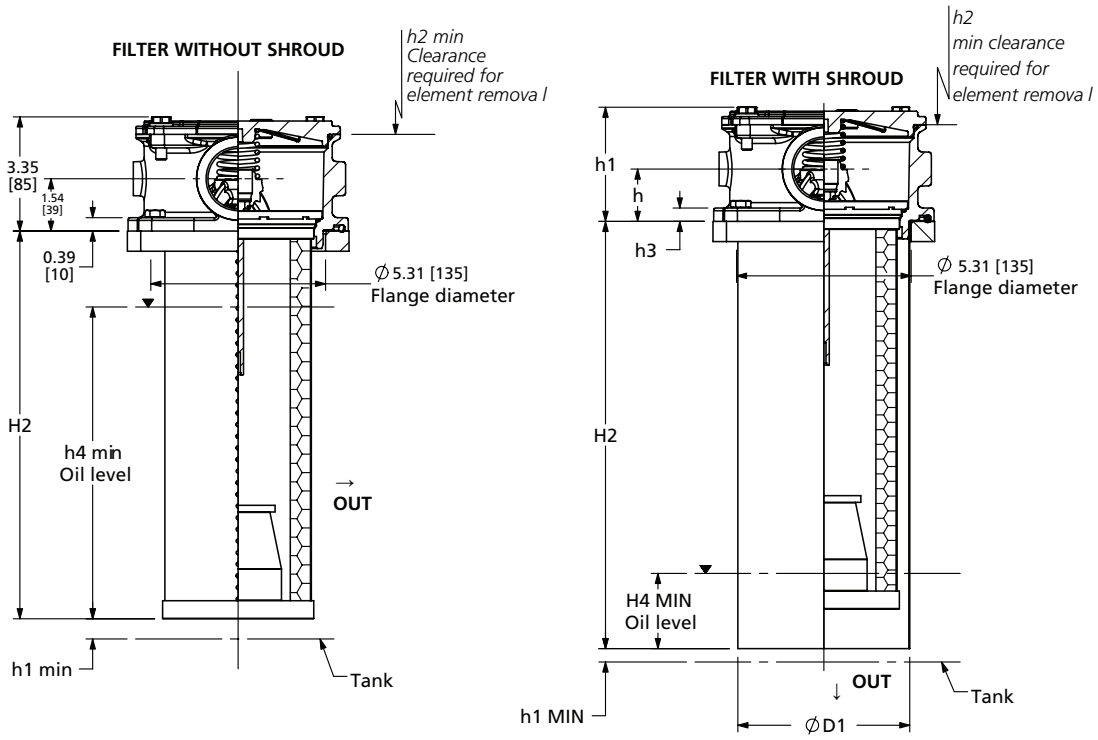

Element Performance Information

Element	Filtration Ratio Per ISO 4572/NFPA T3.10.8.8 Using automated particle counter (APC) calibrated per ISO 4402			Filtration Ratio per ISO 16889 Using APC calibrated per ISO 11171	
	$ß_x \geq 75$	$ß_x \geq 100$	$ß_x \geq 200$	$ß_x(c) \geq 200$	$ß_x(c) \geq 1000$
1RTZ10	C/F	C/F	C/F	C/F	12.3
1RTZ25	C/F	C/F	C/F	C/F	16.2
2RTZ10	C/F	C/F	C/F	C/F	12.3
2RTZ25	C/F	C/F	C/F	C/F	18.6
3RTZ10	C/F	C/F	C/F	C/F	12.3
3RTZ25	C/F	C/F	C/F	C/F	18.6
4RTZ10	C/F	C/F	C/F	C/F	12.3
4RTZ25	C/F	C/F	C/F	C/F	18.6

Element Dirt Holding Capacity & Burst Rating

Element	DHC (g)	Element	DHC (g)
1RTZ10	81.0	3RTZ10	199.1
1RTZ25	89.9	3RTZ25	221.0
2RTZ10	150.5	4RTZ10	242.8
2RTZ25	167.1	4RTZ25	269.5

Element Burst Rating: 87 psi (6 bar) for standard elements
Flow Direction: Inside Out

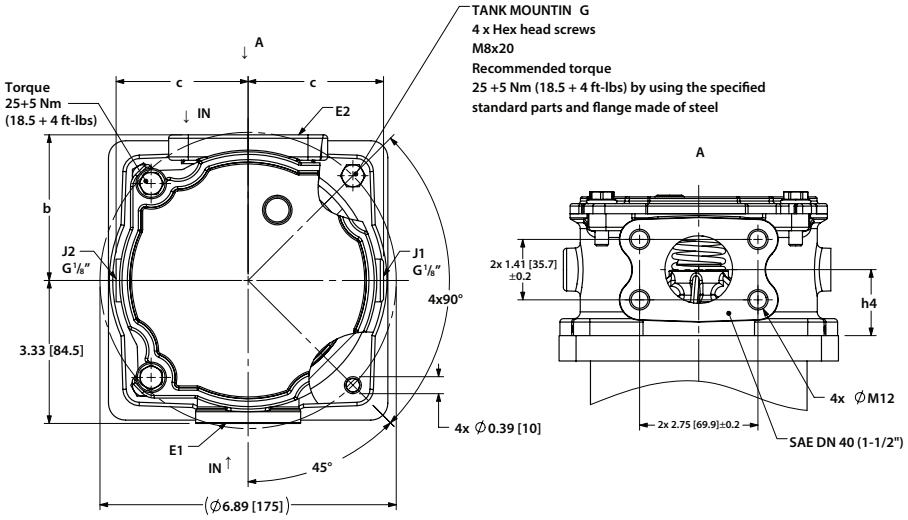

		H1	H2	H3	H4	h2	h4	ØD1	b	c	Weight (lbs [kg])
TRT1	No housing tube	0.39 [10]	8.58 [218]	-	6.10 [155]	10.24 [260]	-	-	3.39 [86.0]* 3.33 [78]**	3.14 [80]* 3.07 [78]**	5.7 [2.6]
	Standard housing with diffuser	0.20 [5]	9.72 [247]	4.02 [102]	0.39 [10]			5.04 [128]			7.04 [3.2]
TRT2	No housing tube	0.39 [10]	11.38 [289]	-	7.99 [203]	12.99 [330]		-			6.38 [2.9]
	Standard housing with diffuser	0.20 [5]	12.52 [318]	4.02 [102]	0.39 [10]			5.04 [128]			8.14 [3.7
TRT3	No housing tube	0.39 [10]	15.16 [385]	-	10.51 [267]	16.96 [430]	1.54 [39]	-			6.82 [3.1]
	Standard housing with diffuser	0.20 [5]	16.30 [414]	4.02 [102]	0.39 [10]			5.04 [128]			8.14 [3.7]
TRT4	No housing tube	0.39 [10]	19.65 [499]	-	13.23 [336]	21.26 [540]		-			7.48 [3.4]
	Standard housing with diffuser	0.20 [5]	20.75 [528]	4.02 [102]	0.39 [10]			5.01 [128]			9.46 [4.3]

*unworked port
**worked port

Dimensions
TRT1, 2, 3, 4

Specifications For The Tank Flange

1. In the filter mounting interface, the tank flange should have a maximum flatness of 0.3 mm and maximum roughness of Ra 3.2 µm.
2. In addition, the mounting interface should be free from damage and scratches.
3. The mounting holes of the flange must be blind, or stud bolts. Loctite must be used to mount the filter. As an alternative, the tank flange can be continuously welded from the inside.
4. Both the tank sheet metal and the filter mounting flange must be sufficiently robust so that neither deform when the seal is compressed during tightening.

TRT1, 2, 3, 4

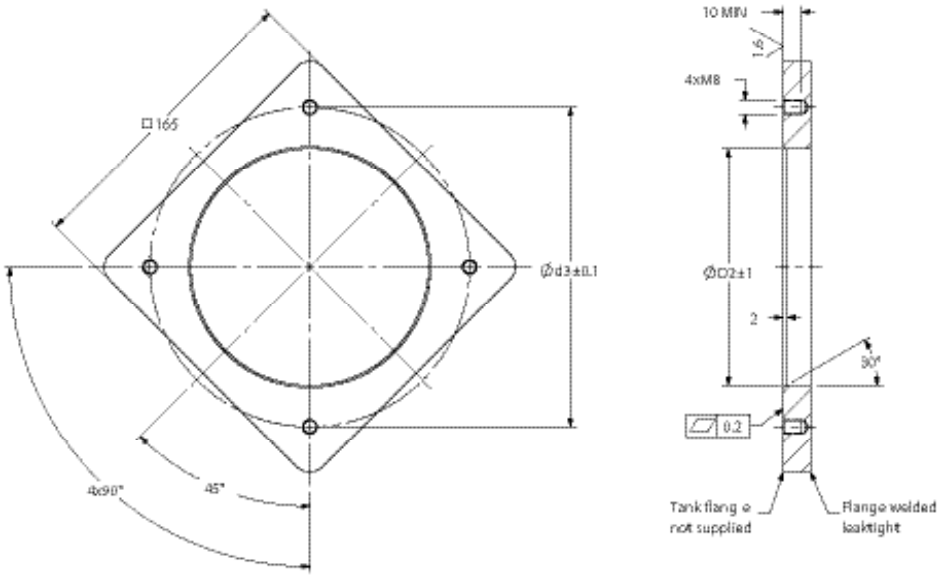

Pressure Drop Information

Based on Flow Rate and Viscosity

$\Delta P_{element}$

TRT1

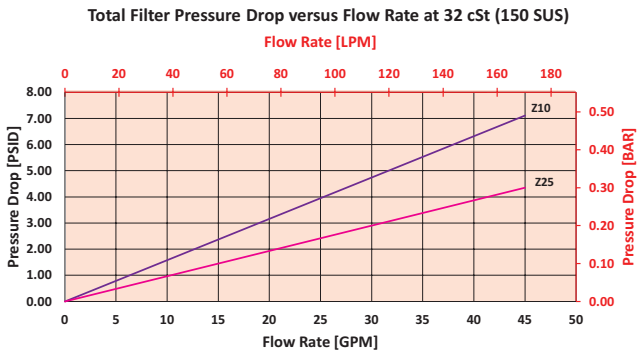

TRT2

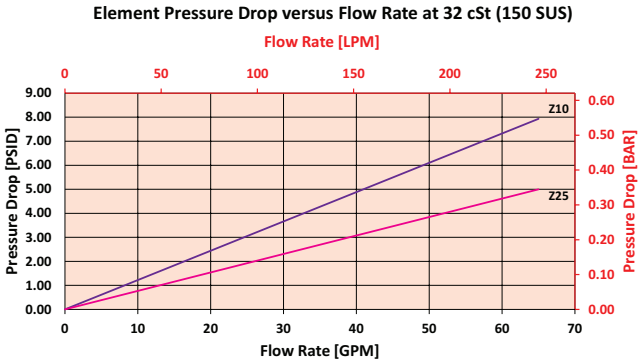

TRT3

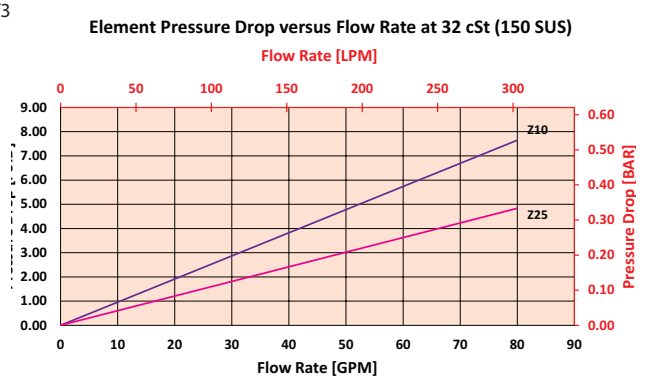

TRT4

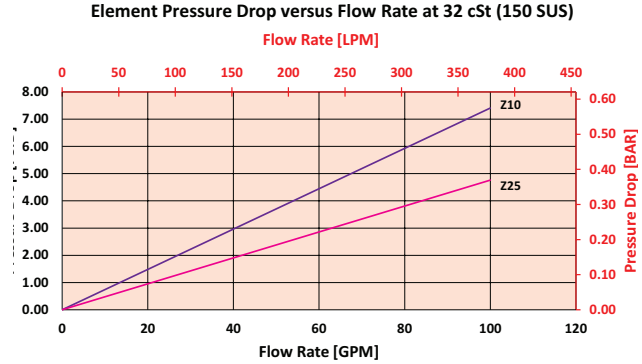

Return Line Filter

Filter Model Number Selection

How to Build a Valid Model Number for a Schroeder TRT:

BOX 1		BOX 2		BOX 3		BOX 4		BOX 5		BOX 6		BOX 7		BOX 8		BOX 9
TRT	–		–		–		–		–		–		–		–	

Example: NOTE: One option per box

BOX 1		BOX 2		BOX 3		BOX 4		BOX 5		BOX 6		BOX 7		BOX 8		BOX 9	
TRT	–	1RTZ	–	10	–		–		–	G	–		–		–		= TRT1RTZ10G

BOX 1

Filter Series
TRT

BOX 2

Size of Element
1RTZ
2RTZ
3RTZ
4RTZ

BOX 3

Micron Rating
5 = 5 µm
10 = 10 µm
25 = 25 µm

BOX 4

Bypass
Omit = standard 36 psi bypass
12 = 12 psi bypass

BOX 5

Magnet
Omit = no magnetic core
M = magnetic core

BOX 6

Porting
G = 1-½" BSPP
S = G 1-½" BSPP, SAE DN 40 (1-½")
S24 = SAE-24 (requires BSPP to SAE bushing to extend port to port dimensions)

BOX 7

Housing Option
Omit = standard housing with diffuser

BOX 8

Seal Material
Omit = Buna N
V = Viton®

BOX 9

Dirt Alarm® Options	
	Omit = No Indicator, sealed up w/ screw plug
Clogging Indicators	VA = visual/electrical
	VE = electrical
	VO = visual

Tank-Mounted Filter BFT

300 gpm
1135 L/min
100 psi
7 bar

Model No. of filter in photograph is BFT1BBZ5F.

Features and Benefits

- Low pressure tank-mounted filter
- Designed for high return line flows
- Dual inlet porting options available
- Top, side or bottom mounting
- Optional check valve prevents reservoir siphoning
- Special filter element design provides aftermarket benefits
- Also available with DirtCatcher® element (BBD)
- Cast iron head available

Filter Housing Specifications

Flow Rating:	Up to 300 gpm (1135 L/min) for 150 SUS (32 cSt) fluids
Max. Operating Pressure:	100 psi (7 bar)
Min. Yield Pressure:	250 psi (17 bar), per NFPA T2.6.1
Rated Fatigue Pressure:	Contact factory, per NFPA T2.6.1
Temp. Range:	-20°F to 225°F (-29°C to 107°C)
Bypass Setting:	Cracking: 25 psi (1.7 bar) Full Flow: 52 psi (3.6 bar)
Porting Head & Cap: Element Case:	Aluminum Steel
Weight of BFT-1BB:	36.7 lbs. (16.6 kg)
Element Change Clearance:	14.75" (375 mm)

Fluid Compatibility

Type Fluid	Appropriate Schroeder Media
Petroleum Based Fluids	All E media (cellulose) and Z-Media® (synthetic)
High Water Content	All Z-Media® (synthetic)
Invert Emulsions	10 and 25 µ Z-Media® (synthetic)
Water Glycols	3, 5, 10 and 25 µ Z-Media® (synthetic)
Phosphate Esters	All Z-Media® (synthetic) with H (EPR) seal designation
Skydrol®	3, 5, 10 and 25 µ Z-Media® (synthetic) with H.5 seal designation (EPR seals and stainless steel wire mesh in element, and light oil coating on housing exterior)

BFT Tank-Mounted Filter

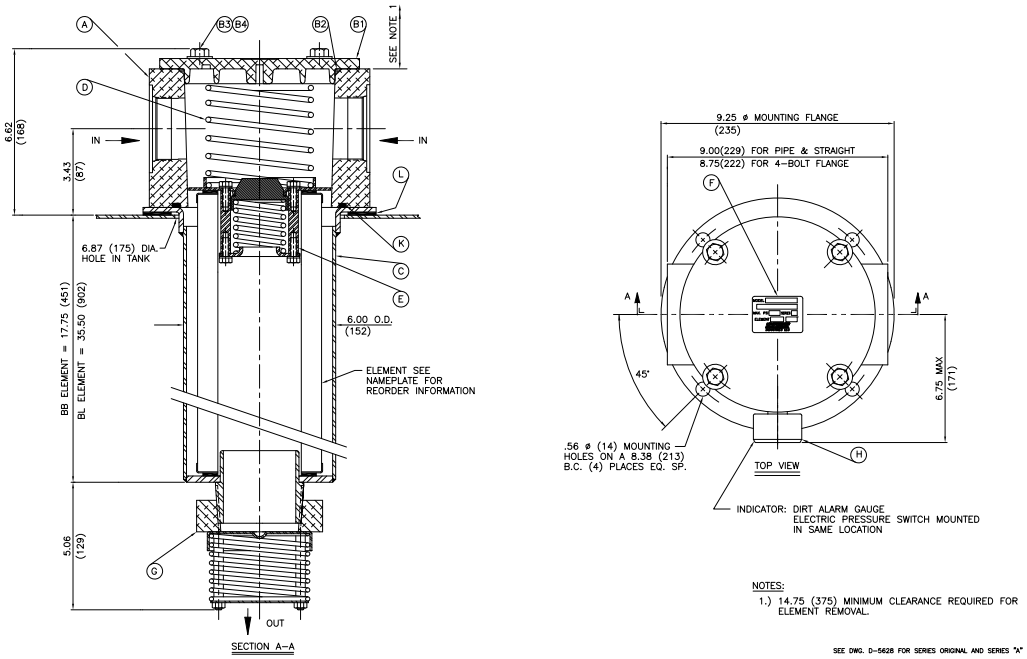

Metric dimensions in ( ).

Element Performance Information & Dirt Holding Capacity

Element	Filtration Ratio Per ISO 4572/NFPA T3.10.8.8 Using automated particle counter (APC) calibrated per ISO 4402			Filtration Ratio per ISO 16889 Using APC calibrated per ISO 11171	
	$ß_x \geq 75$	$ß_x \geq 100$	$ß_x \geq 200$	$ß_{x(c)} \geq 200$	$ß_{x(c)} \geq 1000$
BB/BLZ1	<1.0	<1.0	<1.0	<4.0	4.2
BB/BLZ3	<1.0	<1.0	<2.0	<4.0	4.8
BB/BLZ5	2.5	3.0	4.0	4.8	6.3
BB/BLZ10	7.4	8.2	10.0	8.0	10.0
BB/BLZ25	18.0	20.0	22.5	19.0	24.0

Element	DHC (gm)	Element	DHC (gm)	Element	DHC (gm)
BBZ1	268	BBDZ1	205	BLZ1	536
BBZ3	275	BBDZ3	163	BLZ3	550
BBZ5	301	BBDZ5	229	BLZ5	550
BBZ10	272	BBDZ10	183	BLZ10	550
BBZ25	246	BBDZ25	186	BLZ25	550

Element Collapse Rating: 150 psid (10 bar)

Flow Direction: Outside In

Element Nominal Dimensions: BB: 5.0" (125 mm) O.D. x 18.0" (460 mm) long
BL: 5.0" (125 mm) O.D. x 36.0" (920 mm) long

Pressure Drop Information

Based on Flow Rate and Viscosity

$\Delta P_{housing}$

BFT $\Delta P_{housing}$ for fluids with sp gr (specific gravity) = 0.86:

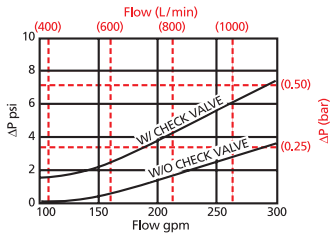

$\Delta P_{element}$

BBZ

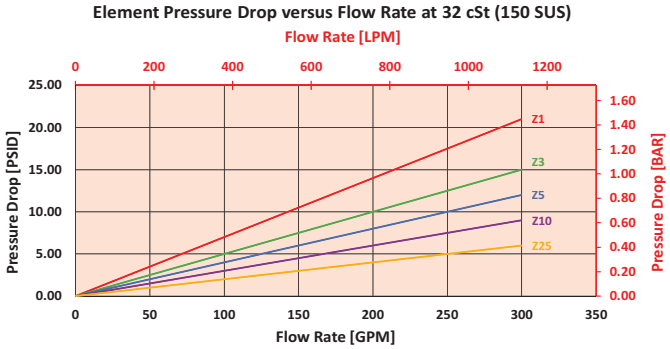

BLZ

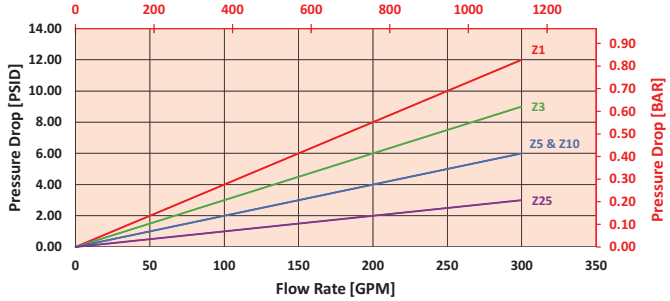

$$\Delta P_{filter} = \Delta P_{housing} + (\Delta P_{element} * V_f)$$

Exercise:

Determine ΔP_{filter} at 200 gpm (758 L/min) for BFT1BBZ10PY2 using 160 SUS (34 cSt) fluid.

Use the housing pressure curve to determine $\Delta P_{housing}$ at 200 gpm. In this case, $\Delta P_{housing}$ is 1.5 psi (.10 bar) on the graph for the BFT housing.

Use the element pressure curve to determine $\Delta P_{element}$ at 200 gpm. In this case, $\Delta P_{element}$ is 6 psi (.41 bar) according to the graph for the BBZ10 element.

Because the viscosity in this sample is 160 SUS (34 cSt), we determine the Viscosity Factor (V_f) by dividing the Operating Fluid Viscosity with the Standard Viscosity of 150 SUS (32 cSt). To best determine your Operating Fluid Viscosity, please reference the chart in Appendix D.

Finally, the overall filter pressure differential, ΔP_{filter}, is calculated by adding $\Delta P_{housing}$ with the true element pressure differential, ($\Delta P_{element} * V_f$). The $\Delta P_{element}$ from the graph has to be multiplied by the viscosity factor to get the true pressure differential across the element.

Solution:

$\Delta P_{housing}$ = 1.5 psi [.10 bar] | $\Delta P_{element}$ = 6 psi [.41 bar]

V_f = 160 SUS (34 cSt) / 150 SUS (32 cSt) = 1.1

ΔP_{filter} = 1.5 psi + (6 psi * 1.1) = 8.1 psi

OR

ΔP_{filter} = .10 bar + (.41 bar * 1.1) = .55 bar

Note:
If your element is not graphed, use the following equation:
$\Delta P_{element}$ = Flow Rate x $\Delta P_{f.}$ Plug this variable into the overall pressure drop equation.

Ele.	ΔP	Ele.	ΔP
BB10	0.03	BL10	0.01
BB25	0.01	BL25	0.01
BBDZ1	0.08	BLDZ1	0.16
BBDZ3	0.06	BLDZ3	0.12
BBDZ5	0.05	BLDZ5	0.10
BBDZ10	0.04	BLDZ10	0.08
BBDZ25	0.02	BLDZ25	0.04

Tank-Mounted Filter

Filter Model Number Selection

How to Build a Valid Model Number for a Schroeder KF3:

BOX 1	BOX 2	BOX 3	BOX 4	BOX 5	BOX 6	BOX 7	BOX 8	BOX 9	BOX 10
BFT –	–	–	–	–	–	–	–	–	–

Example: NOTE: Only box 10 may contain more than one option

BOX 1	BOX 2	BOX 3	BOX 4	BOX 5	BOX 6	BOX 7	BOX 8	BOX 9	BOX 10	
BFT –	1 –	BB10 –	–	P –	–	–	–	Y2 –	–	= BFT1BB10PY2

BOX 1

Filter Series
BFT

BOX 2

Number of Elements
1

BOX 3

Element Size and Media		
BB Length	BL Length	
BB3		= 3 µ E media (cellulose)
BB10		= 10 µ E media (cellulose)
BB25		= 25 µ E media (cellulose)
BBZ1	BLZ1	= 1 µ Excellement® Z-Media® (synthetic)
BBZ3	BLZ3	= 3 µ Excellement® Z-Media® (synthetic)
BBZ5	BLZ5	= 5 µ Excellement® Z-Media® (synthetic)
BBZ10	BLZ10	= 10 µ Excellement® Z-Media® (synthetic)
BBZ25	BLZ25	= 25 µ Excellement® Z-Media® (synthetic)
BBDZ1		= BB size DirtCatcher® 1 µ Excellement® Z-Media®
BBDZ3		= BB size DirtCatcher® 3 µ Excellement® Z-Media®
BBDZ5		= BB size DirtCatcher® 5 µ Excellement® Z-Media®
BBDZ10		= BB size DirtCatcher® 10 µ Excellement® Z-Media®
BBDZ25		= BB size DirtCatcher® 25 µ Excellement® Z-Media®

BOX 4

Seal Material
Omit = Buna N
H = EPR
W = Anodized Aluminum Parts
H.5 = Skydrol® compatibility

BOX 5

Porting
P = 2½" NPTF
PP = Dual 2½" NPTF
S = SAE-32
SS = Dual SAE-32
F = 2½"SAE 4-bolt flange Code 61
FF = Dual 2½"SAE 4-bolt flange Code 61

BOX 6

Bypass Setting
Omit = 25 psi cracking
40 = 40 psi cracking

BOX 7

Outlet Porting
Omit = 3" NPT male
T = 13" Tube extension

BOX 8

Optional Check Valve
Omit = None
C = Check valve

BOX 9

Dirt Alarm® Options		
	Omit =	None
Visual	Y2 =	Back-mounted tri-color gauge
	Y2R =	Back-mounted gauge mounted on opposite side of standard location
Electrical	ES =	Electric switch
	ESR =	Electric switch mounted on opposite side of standard location
	ES1 =	Heavy-duty electric switch with conduit connector
	ES1R =	Heavy-duty electric switch with conduit connector mounted on opposite side of standard location
	ES2 =	Electrical Switch with Deutsch Connector

BOX 10

Additional Options
Omit = None
G547 = Two ⅛" gauge ports
G1476 = Three-terminal electric switch
M = Metric thread for SAE 4-bolt flange mounting holes (specify after each port designation)
40 = 40 psi bypass setting

NOTES:

Box 3. Replacement element part numbers are identical to contents of Boxes 3 and 4. E media elements are only available with Buna N seals.

Box 4. For options H, W, and H.5 all aluminum parts are anodized. H.5 seal designation includes the following: EPR seals, stainless steel wire mesh on elements, and light oil coating on housing exterior. Skydrol® is a registered trademark of Solutia Inc.

Box 8. See also "Accessories for Tank-Mounted Filters," page 307.

Tank-Mounted Filter QT

Model No. of filter in photograph is QT39QZ10P48D5C.

Features and Benefits

- Low pressure tank-mounted filter
- Designed for high return line flows
- Tank-mounted unit saves space, reduces plumbing
- Cap handles provide for easy element changeout
- Offered with standard Q, QW, and QPML deep-pleated elements in 16" and 39" lengths with Viton® seals as the standard seal option

450 gpm
1700 L/min
100 psi
7 bar

Filter Housing Specifications

Flow Rating:	Up to 450 gpm (1700 L/min) for 150 SUS (32 cSt) fluids
Max. Operating Pressure:	100 psi (7 bar)
Min. Yield Pressure:	300 psi (21 bar), per NFPA T2.6.1
Rated Fatigue Pressure:	100 psi (7 bar), per NFPA T2.6.1-R1-2005
Temp. Range:	-20°F to 225°F (-29°C to 107°C)
Bypass Setting:	Cracking: 30 psi (2.1 bar) Full Flow: 55 psi (3.8 bar)
Porting Head: Element Case:	Steel Steel
Min. Weight of QT-16Q: Min. Weight of QT-39Q:	100.0 lbs. (46 kg) 158.0 lbs. (72 kg)
Element Change Clearance:	16Q 12.0" (305 mm) 39Q 33.8" (859 mm)

Fluid Compatibility

Type Fluid	Appropriate Schroeder Media
Petroleum Based Fluids	All E media (cellulose), Z-Media® and ASP® media (synthetic)
High Water Content	All Z-Media® and ASP® media (synthetic)
Invert Emulsions	10 and 25 µ Z-Media® and 10 µ ASP® media (synthetic)
Water Glycols	3, 5, 10 and 25 µ Z-Media® and all ASP® media (synthetic)
Phosphate Esters	All Z-Media® (synthetic) with H (EPR) seal designation and all ASP® media (synthetic)

Tank-Mounted Filter

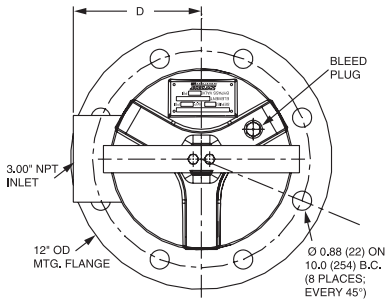

TOP VIEW

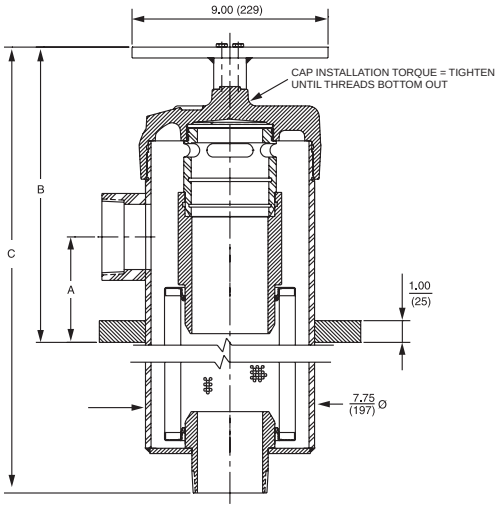

SECTION A-A

INLET PORT SIZE*	DIMENSIONS			
	A	B	C	D
3"	4.85 (123)	14.62 (371)	16Q: 30.43 (773) 39Q: 52.25 (1327)	5.88 (149)
4"	5.75 (146)	16.12 (409)	16Q: 30.43 (773) 39Q: 52.25 (1327)	6.13 (156)

*Outlet port is always 3".

Metric dimensions in ( ).

Element Performance Information & Dirt Holding Capacity

Element		Filtration Ratio Per ISO 4572/NFPA T3.10.8.8 Using automated particle counter (APC) calibrated per ISO 4402			Filtration Ratio per ISO 16889 Using APC calibrated per ISO 11171	
		$ß_x \geq 75$	$ß_x \geq 100$	$ß_x \geq 200$	$ß_x(c) \geq 200$	$ß_x(c) \geq 1000$
16Q	Z1/PMLZ1	<1.0	<1.0	<1.0	<4.0	4.2
	Z3/PMLZ3	<1.0	<1.0	<2.0	<4.0	4.8
	Z5/PMLZ5	2.5	3.0	4.0	4.8	6.3
	Z10/PMLZ10	7.4	8.2	10.0	8.0	10.0
	Z25/PMLZ25	18.0	20.0	22.5	19.0	24.0
39Q	Z1/PMLZ1	<1.0	<1.0	<1.0	<4.0	4.2
	Z3/PMLZ3	<1.0	<1.0	<2.0	<4.0	4.8
	Z5/PMLZ5	2.5	3.0	4.0	4.8	6.3
	Z10/PMLZ10	7.4	8.2	10.0	8.0	10.0
	Z25/PMLZ25	18.0	20.0	22.5	19.0	24.0

Element		DHC (gm)	Element	DHC (gm)
16Q	Z1	276	PMLZ1	307
	Z3	283	PMLZ3	315
	Z5	351	PMLZ5	364
	Z10	280	PMLZ10	330
	Z25	254	PMLZ25	299
39Q	Z1	974	PMLZ1	1485
	Z3	1001	PMLZ3	1525
	Z5	954	PMLZ5	1235
	Z10	940	PMLZ10	1432
	Z25	853	PMLZ25	1299

Element Collapse Rating: Q and QPML: 150 psid (10 bar)

Flow Direction: Outside In

Element Nominal Dimensions:
16Q: 6.0" (150 mm) O.D. x 16.85" (430 mm) long
16QPML: 6.0" (150 mm) O.D. x 16.00" (405 mm) long
39Q: 6.0" (150 mm) O.D. x 38.70" (985 mm) long
39QPML: 6.0" (150 mm) O.D. x 37.80" (960 mm) long

Pressure Drop Information

Based on Flow Rate and Viscosity

$\Delta P_{housing}$

QT $\Delta P_{housing}$ for fluids with sp gr (specific gravity) = 0.86:

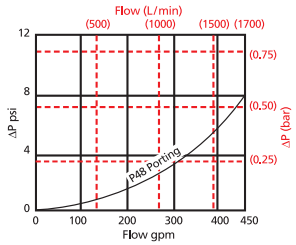

$\Delta P_{element}$

39QZ

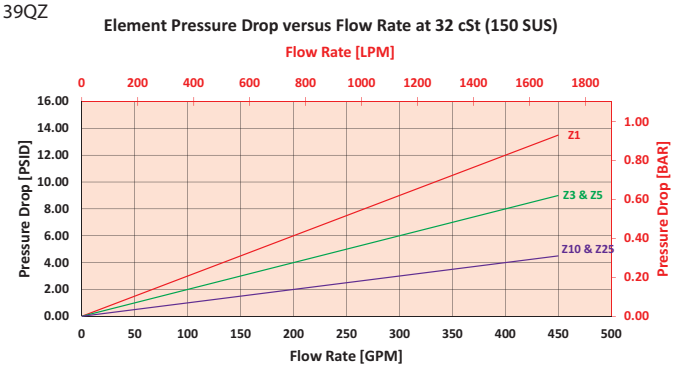

39QPMLZ

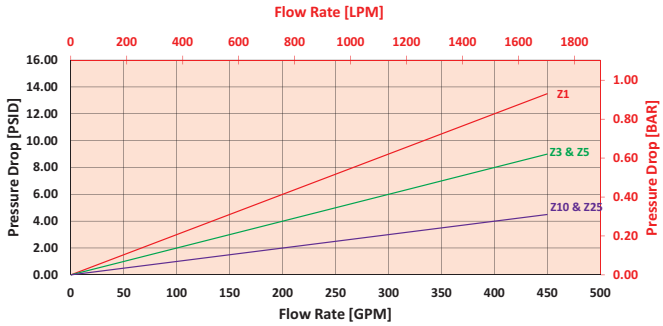

$$\Delta P_{filter} = \Delta P_{housing} + (\Delta P_{element} * V_f)$$

Exercise:

Determine ΔP_{filter} at 200 gpm (758 L/min) for QT16QZ3P48D5C using 160 SUS (34 cSt) fluid.

Use the housing pressure curve to determine $\Delta P_{housing}$ at 200 gpm. In this case, $\Delta P_{housing}$ is 2 psi (.14 bar) on the graph for the QT housing.

Use the element pressure curve to determine $\Delta P_{element}$ at 200 gpm. In this case, $\Delta P_{element}$ is 8 psi (.55 bar) according to the graph for the 16QZ3 element.

Because the viscosity in this sample is 160 SUS (34 cSt), we determine the Viscosity Factor (V_f) by dividing the Operating Fluid Viscosity with the Standard Viscosity of 150 SUS (32 cSt). To best determine your Operating Fluid Viscosity, please reference the chart in Appendix D.

Finally, the overall filter pressure differential, ΔP_{filter}, is calculated by adding $\Delta P_{housing}$ with the true element pressure differential, ($\Delta P_{element} * V_f$). The $\Delta P_{element}$ from the graph has to be multiplied by the viscosity factor to get the true pressure differential across the element.

Solution:

$\Delta P_{housing}$ = 2 psi [.14 bar] | $\Delta P_{element}$ = 8 psi [.55 bar]

V_f = 160 SUS (34 cSt) / 150 SUS (32 cSt) = 1.1

ΔP_{filter} = 2 psi + (8 psi * 1.1) = 10.8 psi

OR

ΔP_{filter} = .14 bar + (.55 bar * 1.1) = .75 bar

Note:
If your element is not graphed, use the following equation:
$\Delta P_{element}$ = Flow Rate x ΔP_f Plug this variable into the overall pressure drop equation.

Ele.	ΔP	Ele.	ΔP
16QAS3V	0.04	16QPMLZ1	0.08
16QAS5V	0.04	16QPMLZ3	0.05
16QAS10V	0.03	16QPMLZ5	0.05
16QPMLAS3V	0.05	16QPMLZ10	0.04
16QPMLAS5V	0.05	16QPMLZ25	0.02
16QPMLAS10V	0.04	39QAS3V	0.01
16QZ1	0.09	39QAS5V	0.01
16QZ3	0.04	39QAS10V	0.01
16QZ5	0.04	39QPMLAS3V	0.02
16QZ10	0.03	39QPMLAS5V	0.02
16QZ25	0.01	39QPMLAS10V	0.01

QT Tank-Mounted Filter

Filter Model Number Selection

How to Build a Valid Model Number for a Schroeder QT:

BOX 1	BOX 2	BOX 3	BOX 4	BOX 5	BOX 6	BOX 7	BOX 8	BOX 9	BOX 10
QT									

Example: NOTE: One option per box

BOX 1	BOX 2	BOX 3	BOX 4	BOX 5	BOX 6	BOX 7	BOX 8	BOX 9	BOX 10	
QT	16	Q	Z	3		P48			D5C	= QT16QZ3P48D5C

BOX 1 — Filter Series

QT

BOX 2 — Element Length (in)

16
39

BOX 3 — Element Style

Q
QCLQF
QPML

BOX 4 — Media Type

Z	= Excellement® Z-Media® (synthetic)
W	= W media (water removal)
AS	= Anti-Static Pleat Media (synthetic)

BOX 5 — Micron Rating

1	= 1 µ Z-Media®
3	= 3 µ AS and Z-Media®
5	= 5 µ AS and Z-Media®
10	= 10 µ AS and Z-Media®
25	= 25 µ Z-Media®

BOX 6 — Housing Seal Material

Omit	= Buna N
H	= EPR
V	= Viton®

BOX 7 — Inlet Porting

P48	= 3" NPTF
P64	= 4" NPTF

BOX 8 — Bypass Setting

Omit	= 30 psi cracking
X	= Blocked bypass
50	= 50 psi cracking

BOX 9 — Outlet Porting

Omit	= 3" NPT Male
C	= Check valve
D	= Diffuser
CD	= Check valve and diffuser

BOX 10 — Dirt Alarm® Options

	Omit	= None
Visual	D5C	= Visual pop-up in cap
Visual with Thermal Lockout	D8C	= Visual w/ thermal lockout in cap
Electrical	MS5C	= Electrical w/ 12 in. 18 gauge 4-conductor cable in cap
	MS5LCC	= Low current MS5 in cap
	MS10C	= Electrical w/ DIN connector (male end only) in cap
	MS10LCC	= Low current MS10 in cap
	MS11C	= Electrical w/ 12 ft. 4-conductor wire in cap
	MS12C	= Electrical w/ 5 pin Brad Harrison connector (male end only) in cap
	MS12LCC	= Low current MS12 in cap
	MS16C	= Electrical w/ weather-packed sealed connector in cap
	MS16LCC	= Low current MS16 in cap
	MS17LCC	= Electrical w/ 4 pin Brad Harrison male connector in cap
Electrical with Thermal Lockout	MS5T	= MS5 (see above) w/ thermal lockout in cap
	MS5LCT	= Low current MS5T in cap
	MS10TC	= MS10 (see above) w/ thermal lockout in cap
	MS10LCTC	= Low current MS10T in cap
	MS12TC	= MS12 (see above) w/ thermal lockout
	MS12LCTC	= Low current MS12T in cap
	MS16TC	= MS16 (see above) w/ thermal lockout in cap
	MS16LCTC	= Low current MS16T in cap
	MS17LCTC	= Low current MS17T in cap
Electrical Visual	MS13C	= Supplied w/ threaded connector & light in cap
	MS14C	= Supplied w/ 5 pin Brad Harrison connector & light (male end) in cap
Electrical Visual with Thermal Lockout	MS13DCTC	= MS13 (see above), direct current, w/ thermal lockout in cap
	MS13DCLCTC	= Low current MS13DCT in cap
	MS14DCTC	= MS14 (see above), direct current, w/ thermal lockout in cap
	MS14DCLCTC	= Low current MS14DCT in cap

NOTES:

Box 2. Replacement element part numbers are a combination of Boxes 2, 3, 4 and 5, plus the letter V. Example: 16QZ1V

Box 3. QCLQF element are not available in ASP® media.

Box 4. E media elements are also available for the QT filter housing. Contact factory for more information.

Box 4. For Option W, Box 3 must equal Q.

Box 6. Viton® is a registered trademark of DuPont Dow Elastomers. All elements for this filter are supplied with Viton® seals. Seal designation in Box 6 applies to housing only.

Tank-Mounted Filter Kit

KTK

100 gpm
380 L/min
100 psi
7 bar

Model No. of filter in photograph is KTKKKZ10.

Features and Benefits

- Special tank-mounted filter kit
- Includes: cap assembly, weld ring assembly, element and bushing
- Available with standard K, KK or 27K-size elements
- Bypass valve in cap assembly

Filter Housing Specifications

Flow Rating:	Up to 100 gpm (380 L/min) for 150 SUS (32 cSt) fluids
Max. Operating Pressure:	100 psi (7 bar) exclusive of tank design
Min. Yield Pressure:	Contact factory
Rated Fatigue Pressure:	Contact factory
Temp. Range:	-20°F to 225°F (-29°C to 107°C)
Bypass Setting:	Cracking: 25 psi (1.7 bar) Full Flow: 40 psi (2.8 bar)
Porting Cap: Weld Ring:	Die Cast Aluminum Steel
Element Change Clearance:	8.0" (205 mm) for K; 17.50" (445 mm) for KK; 26.5" (673 mm) for 27K

Fluid Compatibility

Type Fluid	Appropriate Schroeder Media
Petroleum Based Fluids	All E media (cellulose), Z-Media® and ASP® media (synthetic)
High Water Content	All Z-Media® and all ASP® media (synthetic)
Invert Emulsions	10 and 25 µ Z-Media® and 10 µ ASP® media (synthetic)
Water Glycols	3, 5, 10 and 25 µ Z-Media® and all ASP® media (synthetic)
Phosphate Esters	All Z-Media® (synthetic) with H (EPR) seal designation and 3 and 10 µ E media (cellulose) with H (EPR) seal designation and ASP® media (synthetic)
Skydrol®	3, 5, 10 and 25 µ Z-Media® (synthetic) with H.5 seal designation (EPR seals and stainless steel wire mesh in element, and light oil coating on housing exterior) and all ASP® media (synthetic)

KTK Tank-Mounted Filter Kit

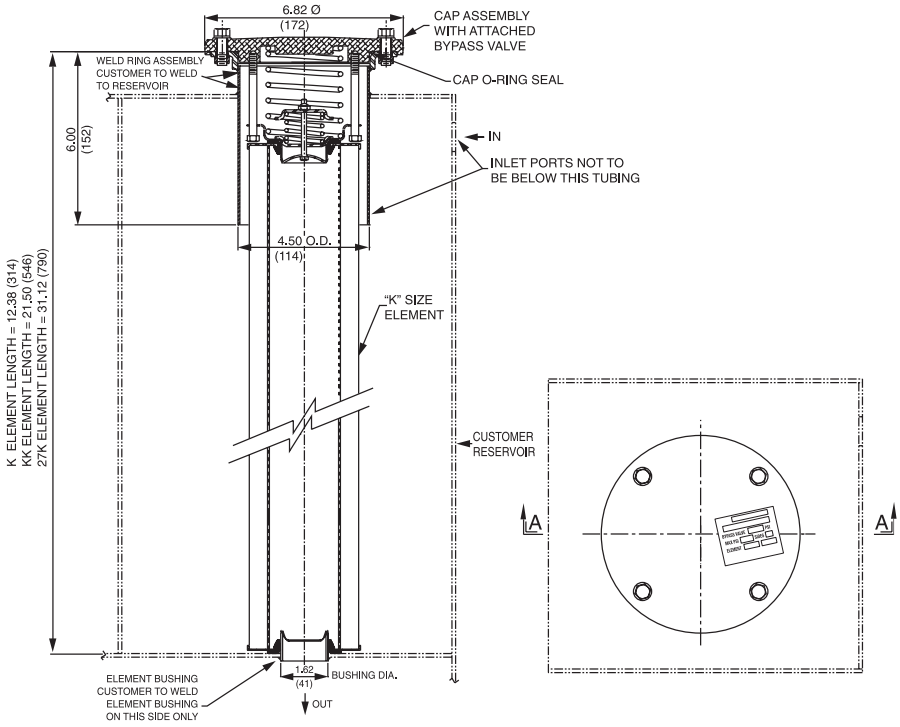

SECTION A-A

Metric dimensions in ( ).

Kit includes cap assembly, weld ring assembly, element, and bushing.

Element Performance Information & Dirt Holding Capacity

Element	Filtration Ratio Per ISO 4572/NFPA T3.10.8.8 Using automated particle counter (APC) calibrated per ISO 4402			Filtration Ratio per ISO 16889 Using APC calibrated per ISO 11171	
	$ß_x \geq 75$	$ß_x \geq 100$	$ß_x \geq 200$	$ß_x(c) \geq 200$	$ß_x(c) \geq 1000$
KZ1	<1.0	<1.0	<1.0	<4.0	4.2
KZ3	<1.0	<1.0	<2.0	<4.0	4.8
KZ5	2.5	3.0	4.0	4.8	6.3
KZ10	7.4	8.2	10.0	8.0	10.0
KZ25	18.0	20.0	22.5	19.0	24.0
KZW1	N/A	N/A	N/A	<4.0	<4.0
KZW3/KKZW3	N/A	N/A	N/A	4.0	4.8
KZW5/KKZW5	N/A	N/A	N/A	5.1	6.4
KZW10/KKZW10	N/A	N/A	N/A	6.9	8.6
KZW25/KKZW25	N/A	N/A	N/A	15.4	18.5

Element	DHC (gm)	Element	DHC (gm)	Element	DHC (gm)	Element	DHC (gm)	Element	DHC (gm)
KZ1	112	KKZ1	224	27KZ1	336	KZW1	61		
KZ3	115	KKZ3	230	27KZ3	345	KZW3	64	KKZW3	128
KZ5	119	KKZ5	238	27KZ5	357	KZW5	63	KKZW5	126
KZ10	108	KKZ10	216	27KZ10	324	KZW10	57	KKZW10	114
KZ25	93	KKZ25	186	27KZ25	279	KZW25	79	KKZW25	158

Element Collapse Rating: 150 psid (10 bar) for standard elements

Flow Direction: Outside In

Element Nominal Dimensions: 3.9" (99 mm) O.D. x 9.0" (230 mm) long

Pressure Drop Information

Based on Flow Rate and Viscosity

*KTK Dirty Box Pressure Drop is Customer Tank Design Dependant. Please account for this when designing system.

$\Delta P_{element}$

KZ

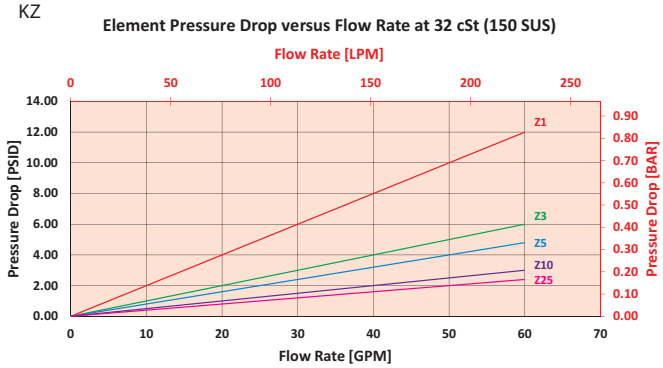

KKZ

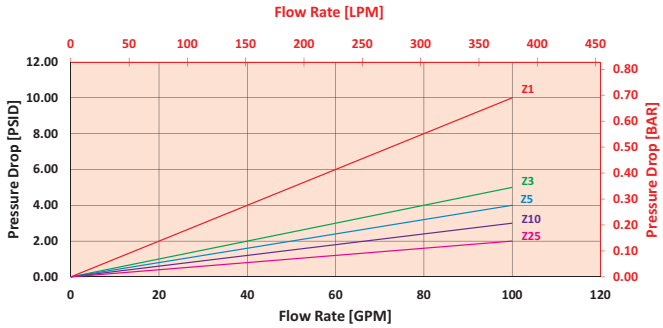

$$\Delta P_{filter} = \Delta P_{housing} + (\Delta P_{element} * V_f)$$

Exercise:

Determine ΔP_{filter} at 80 gpm (303.2 L/min) for KTKKZ3 using 160 SUS (34 cSt) fluid.

Use the element pressure curve to determine $\Delta P_{element}$ at 80 gpm. In this case, $\Delta P_{element}$ is 8 psi (.55 bar) according to the graph for the KZ3 element.

Because the viscosity in this sample is 160 SUS (34 cSt), we determine the Viscosity Factor (V_f) by dividing the Operating Fluid Viscosity with the Standard Viscosity of 150 SUS (32 cSt). To best determine your Operating Fluid Viscosity, please reference the chart in Appendix D.

Finally, the overall filter pressure differential, ΔP_{filter}, is calculated by adding $\Delta P_{housing}$ with the true element pressure differential, ($\Delta P_{element} * V_f$). The $\Delta P_{element}$ from the graph has to be multiplied by the viscosity factor to get the true pressure differential across the element.

Solution:

$\Delta P_{element}$ = 8 psi [.55 bar]

V_f = 160 SUS (34 cSt) / 150 SUS (32 cSt) = 1.1

ΔP_{filter} = (8 psi * 1.1) = 8.8 psi

OR

ΔP_{filter} = (.55 bar * 1.1) = .61 bar

Note:
If your element is not graphed, use the following equation:
$\Delta P_{element}$ = Flow Rate x ΔP_f Plug this variable into the overall pressure drop equation.

Ele.	ΔP	Ele.	ΔP	Ele.	ΔP
K3	0.25	2K3/ KK3	0.12	3KZ1/ 27KZ1	0.05
K10	0.09	2K10/ KK10	0.05	3KZ3/ 27KZ3	0.03
K25	0.02	2K25/ KK25	0.01	3KZ5/ 27KZ5	0.02
KAS3	0.10	2KAS3/ KKAS3	0.05	3KZ10/ 27KZ10	0.02
KAS5	0.08	2KAS5/ KKAS5	0.04	3KZ25/ 27KZ25	0.01
KAS10	0.05	2KAS10/ KKAS10	0.03	3K3	0.08
KZW1	0.43	2KZW1	-	3K10	0.03
KZW3	0.32	2KZW3/ KKZW3	0.16	3K25	0.01
KZW5	0.28	2KZW5/ KKZW5	0.14	3KAS3/ 27KAS3	0.03
KZW10	0.23	2KZW10/ KKZW10	0.12	3KAS5/ 27KAS5	0.02
KZW25	0.14	2KZW25/ KKZW25	0.07	3KAS10/ 27KAS10	0.02

Tank-Mounted Filter Kit

Filter Model Number Selection

How to Build a Valid Model Number for a Schroeder KTK:

BOX 1		BOX 2		BOX 3		BOX 4		BOX 5
KTK	–		–		–		–	

Example: NOTE: One option per box

BOX 1		BOX 2		BOX 3		BOX 4		BOX 5	
KTK	–	K	–	Z3	–		–		= KTKKZ3

BOX 1

Filter Series
KTK

BOX 2

Element Length
K
KK
27K

BOX 3

Element Part Number	
3	= 3 µ E media (cellulose)
10	= 10 µ E media (cellulose)
25	= 25 µ E media (cellulose)
Z1	= 1 µ Excellement® Z-Media® (synthetic)
Z3/AS3	= 3 µ Excellement® Z-Media® (synthetic)
Z5/AS5	= 5 µ Excellement® Z-Media® (synthetic)
Z10/AS10	= 10 µ Excellement® Z-Media® (synthetic)
Z25	= 25 µ Excellement® Z-Media® (synthetic)
ZW1	= 1 µ Aqua-Excellement™ ZW media
ZW3	= 3 µ Aqua-Excellement™ ZW media
ZW5	= 5 µ Aqua-Excellement™ ZW media
ZW10	= 10 µ Aqua-Excellement™ ZW media
ZW25	= 25 µ Aqua-Excellement™ ZW media
ZW1	= 1 µ Aqua-Excellement™ ZW media
ZW3	= 3 µ Aqua-Excellement™ ZW media
ZW5	= 5 µ Aqua-Excellement™ ZW media
ZW10	= 10 µ Aqua-Excellement™ ZW media
ZW25	= 25 µ Aqua-Excellement™ ZW media

BOX 4

Seal Material	
Omit	= Buna N
H	= EPR
W	= Buna N
H.5	= Skydrol® Compatibility

BOX 5

Dirt Alarm® Options		
	Omit	= None
Visual	Y2C	= Bottom-mounted gauge in cap

NOTES:

Box 3. Replacement element part numbers are identical to contents of Boxes 2, 3, and 4.

Box 4. For options H and W, cap is anodized. H.5 seal designation includes the following: EPR seals, stainless steel wire mesh on elements, and light oil coating on housing exterior. Skydrol® is a registered trademark of Solutia Inc.

Tank-Mounted Filter Kit LTK

Model No. of filter in photograph is LTK18LZ3.

Features and Benefits

- Special tank-mounted filter kit
- Includes: cap assembly, weld ring assembly, element and bushing
- Available with standard 18L sized element
- Bypass valve in cap assembly

150 gpm
570 L/min
100 psi
7 bar

Filter Housing Specifications

Flow Rating:	Up to 150 gpm (570 L/min) for 150 SUS (32 cSt) fluids
Max. Operating Pressure:	100 psi (7 bar) exclusive of tank design
Min. Yield Pressure:	Contact factory
Rated Fatigue Pressure:	Contact factory
Temp. Range:	-20°F to 225°F (-29°C to 107°C)
Bypass Setting:	Cracking: 25 psi (1.7 bar) Full Flow: 47 psi (3.2 bar)
Porting Cap: Weld Ring:	Die Cast Aluminum Steel
Element Change Clearance:	17.0" (435 mm)

Fluid Compatibility

Type Fluid	Appropriate Schroeder Media
Petroleum Based Fluids	All E media (cellulose) and Z-Media® (synthetic)
High Water Content	All Z-Media® (synthetic)
Invert Emulsions	10 and 25 µ Z-Media® (synthetic)
Water Glycols	3, 5, 10 and 25 µ Z-Media® (synthetic)
Phosphate Esters	All Z-Media® (synthetic) with H (EPR) seal designation and 3 and 10 µ E media (cellulose) with H (EPR) seal designation
Skydrol®	3, 5, 10 and 25 µ Z-Media® (synthetic) with H.5 seal designation (EPR seals and stainless steel wire mesh in element, and light oil coating on housing exterior)

Tank-Mounted Filter Kit

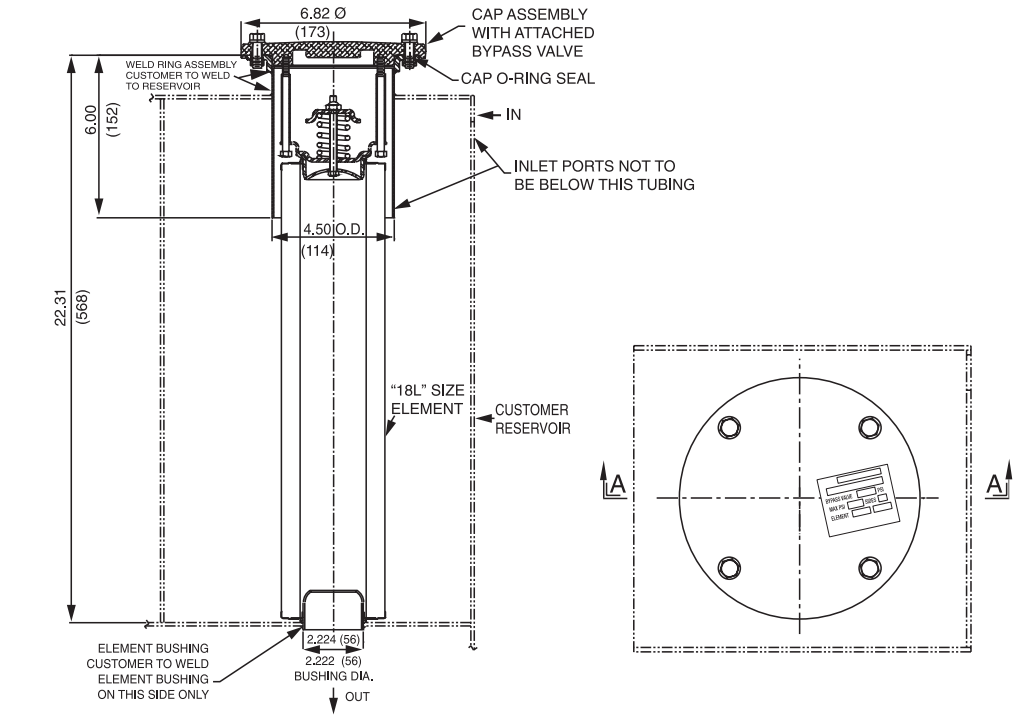

Metric dimensions in ( ).

SECTION A-A

Element Performance Information & Dirt Holding Capacity

Element	Filtration Ratio Per ISO 4572/NFPA T3.10.8.8 Using automated particle counter (APC) calibrated per ISO 4402			Filtration Ratio per ISO 16889 Using APC calibrated per ISO 11171	
	$ß_x \geq 75$	$ß_x \geq 100$	$ß_x \geq 200$	$ß_x(c) \geq 200$	$ß_x(c) \geq 1000$
18LZ1	<1.0	<1.0	<1.0	<4.0	4.2
18LZ3	<1.0	<1.0	<2.0	<4.0	4.8
18LZ5	2.5	3.0	4.0	4.8	6.3
18LZ10	7.4	8.2	10.0	8.0	10.0
18LZ25	18.0	20.0	22.5	19.0	24.0

Element	DHC (gm)
18LZ1	224
18LZ3	230
18LZ5	238
18LZ10	216
18LZ25	186

Element Collapse Rating:	150 psid (10 bar)
Flow Direction:	Outside In
Element Nominal Dimensions:	4.0" (100 mm) O.D. x 18.5" (470 mm) long

Pressure Drop Information
Based on Flow Rate and Viscosity

*LTK Dirty Box Pressure Drop is Customer Tank Design Dependant.
Please account for this when designing system.

$\Delta P_{element}$

18LZ

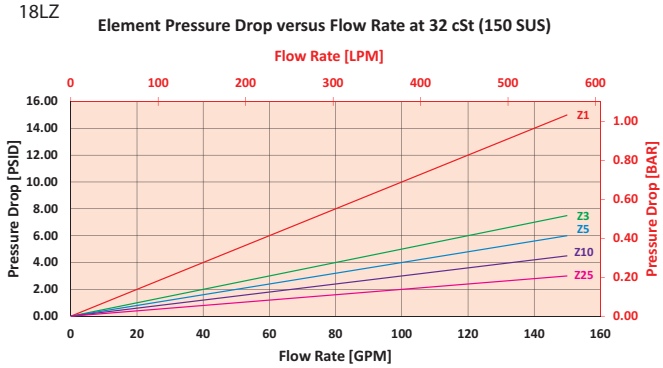

$$\Delta P_{filter} = \Delta P_{housing} + (\Delta P_{element} * V_f)$$

Exercise:

Determine ΔP_{filter} at 80 gpm (303.2 L/min) for LTK18LKZ3 using 160 SUS (34 cSt) fluid.

Use the element pressure curve to determine $\Delta P_{element}$ at 80 gpm. In this case, $\Delta P_{element}$ is 4 psi (.27 bar) according to the graph for the 18LZ3 element.

Because the viscosity in this sample is 160 SUS (34 cSt), we determine the Viscosity Factor (V_f) by dividing the Operating Fluid Viscosity with the Standard Viscosity of 150 SUS (32 cSt). To best determine your Operating Fluid Viscosity, please reference the chart in Appendix D.

Finally, the overall filter pressure differential, ΔP_{filter}, is calculated by adding $\Delta P_{housing}$ with the true element pressure differential, ($\Delta P_{element} * V_f$). The $\Delta P_{element}$ from the graph has to be multiplied by the viscosity factor to get the true pressure differential across the element.

Solution:

$\Delta P_{element}$ = 4 psi [.27 bar]

V_f = 160 SUS (34 cSt) / 150 SUS (32 cSt) = 1.1

ΔP_{filter} = (4 psi * 1.1) = 4.4 psi

OR

ΔP_{filter} = (.27 bar * 1.1) = .30 bar

Tank-Mounted Filter Kit

Filter Model Number Selection

How to Build a Valid Model Number for a Schroeder LTK:

BOX 1		BOX 2		BOX 3		BOX 4		BOX 5
LTK	–		–		–		–	

Example: NOTE: One option per box

BOX 1		BOX 2		BOX 3		BOX 4		BOX 5	
LTK	–	18	–	LZ3	–		–		= LTK18LZ3

BOX 1

Filter Series
LTK

BOX 2

Length of Element (in)
18

BOX 3

Element Size and Media
L3 = L size 3 µ E media (cellulose)
L10 = L size 10 µ E media (cellulose)
L25 = L size 25 µ E media (cellulose)
LZ1 = L size 1 µ Excellement® Z-Media® (synthetic)
LZ3 = L size 3 µ Excellement® Z-Media® (synthetic)
LZ5 = L size 5 µ Excellement® Z-Media® (synthetic)
LZ10 = L size 10 µ Excellement® Z-Media® (synthetic)
LZ25 = L size 25 µ Excellement® Z-Media® (synthetic)

BOX 4

Seal Material
Omit = Buna N
H = EPR
W = Buna N
H.5 = Skydrol® Compatibility

BOX 5

Dirt Alarm® Options	
	Omit = None
Visual	Y2C = Bottom-mounted gauge in cap

NOTES:

Box 2. Replacement element part numbers are a combination of Boxes 2, 3, and 4. Example: 18LZ3H

Box 4. For options H and W, cap is anodized. H.5 seal designation includes the following: EPR seals, stainless steel wire mesh on elements, and light oil coating on housing exterior. Skydrol® is a registered trademark of Solutia Inc.

Medium Pressure In-Tank Filter

MRT

Model No. of filter in photograph is MRT18LZ10S24S24D5.

Features and Benefits

- Medium pressure tank mounted filter ideal for applications with high pressure surge in the return line
- Two possible inlet porting locations
- Various Dirt Alarm® options available
- Also available with DirtCatcher® element
- Optional sampling fitting available upon request

150 gpm
570 L/min
900 psi
62 bar

Filter Housing Specifications

Flow Rating:	Up to 150 gpm (570 L/min) for 150 SUS (32 cSt) fluids
Max. Operating Pressure:	900 psi (62 bar)
Min. Yield Pressure:	2700 psi (186 bar), per NFPA T2.6.1
Rated Fatigue Pressure:	750 psi (52 bar), per NFPA T2.6.1-2005
Temp. Range:	-20°F to 225°F (-29°C to 107°C)
Bypass Setting:	Cracking: 40 psi (2.8 bar)
Porting Head & Cap: Element Case:	Cast Aluminum (Anodized) Steel
Weight of MRT:	36.0 lbs. (16.4 kg)
Element Change Clearance:	17.0" (432 mm)

Fluid Compatibility

Type Fluid	Appropriate Schroeder Media
Petroleum Based Fluids	All E media (cellulose) and Z-Media® (synthetic)
High Water Content	All Z-Media® (synthetic)
Invert Emulsions	10 and 25 µ Z-Media® (synthetic)
Water Glycols	3, 5, 10 and 25 µ Z-Media® (synthetic)

Medium Pressure In-Tank Filter

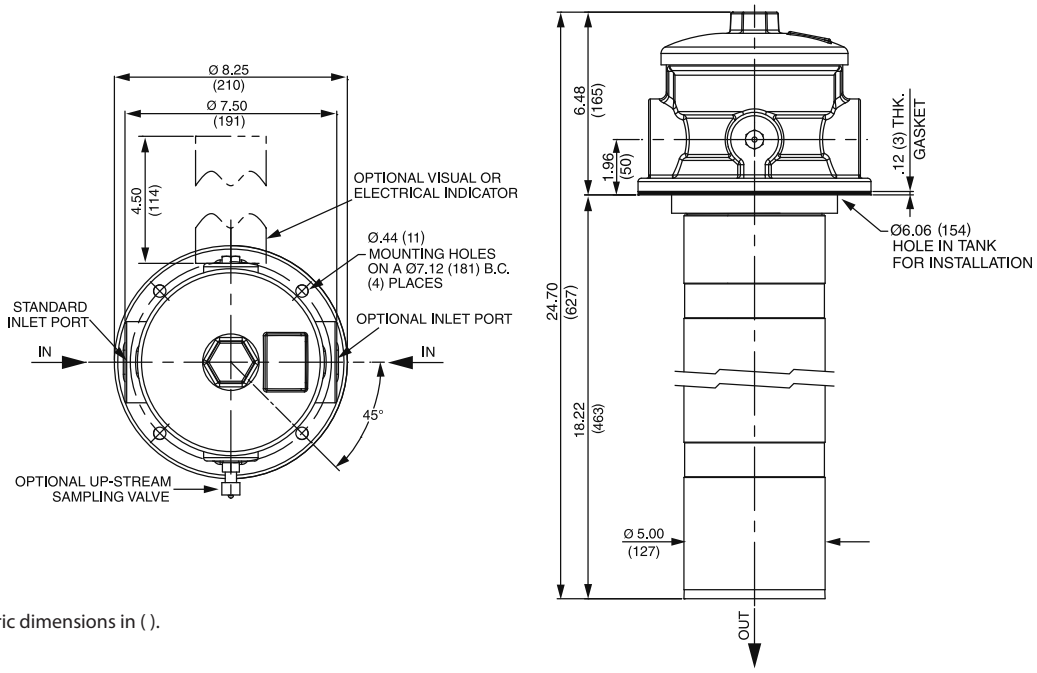

Metric dimensions in ( ).

Element Performance Information & Dirt Holding Capacity

	Filtration Ratio Per ISO 4572/NFPA T3.10.8.8 Using automated particle counter (APC) calibrated per ISO 4402			Filtration Ratio per ISO 16889 Using APC calibrated per ISO 11171	
Element	$ß_x \geq 75$	$ß_x \geq 100$	$ß_x \geq 200$	$ß_x(c) \geq 200$	$ß_x(c) \geq 1000$
18LZ1	<1.0	<1.0	<1.0	<4.0	4.2
18LZ3	<1.0	<1.0	<2.0	<4.7	5.8
18LZ5	2.5	3.0	4.0	6.5	7.5
18LZ10	7.4	8.2	10.0	10.0	12.7
18LZ25	18.0	20.0	22.5	19.0	24.0
18LDZ1	<1.0	<1.0	<1.0	<4.0	4.2
18LDZ3	<1.0	<1.0	<2.0	<4.7	5.8
18LDZ5	2.5	3.0	4.0	6.5	7.5
18LDZ10	7.4	8.2	10.0	10.0	12.7
18LDZ25	18.0	20.0	22.5	19.0	24.0

Element	DHC (gm)	Element	DHC (gm)
18LZ1	224	18LDZ1	194
18LZ3	230	18LDZ3	199
18LZ5	238	18LDZ5	149
18LZ10	216	18LDZ10	186
18LZ25	186	18LDZ25	169

Element Collapse Rating: 150 psid (10 bar)

Flow Direction: Outside In

Element Nominal Dimensions: 4.0" (100 mm) O.D. x 18.5" (470 mm) long

Pressure Drop Information
Based on Flow Rate and Viscosity

$\Delta P_{housing}$

MRT $\Delta P_{housing}$ for fluids with sp gr (specific gravity) = 0.86:

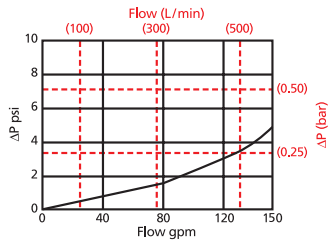

$\Delta P_{element}$

18LZ

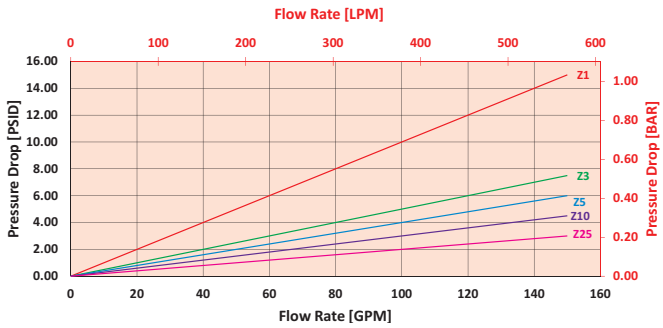

18LDZ

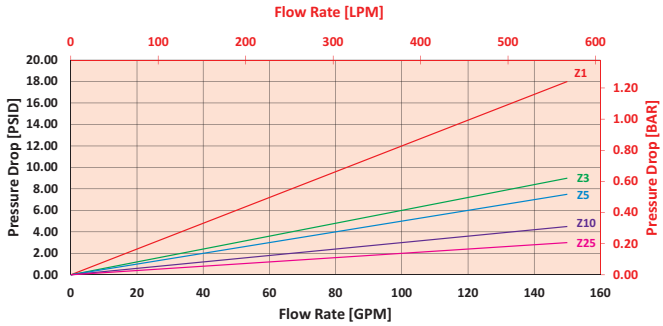

$$\Delta P_{filter} = \Delta P_{housing} + (\Delta P_{element} * V_f)$$

Exercise:

Determine ΔP_{filter} at 80 gpm (303.2 L/min) for MRT18LZ10S24S24 using 160 SUS (34 cSt) fluid.

Use the housing pressure curve to determine $\Delta P_{housing}$ at 80 gpm. In this case, $\Delta P_{housing}$ is 1.5 psi (.10 bar) on the graph for the MRT housing.

Use the element pressure curve to determine $\Delta P_{element}$ at 80 gpm. In this case, $\Delta P_{element}$ is 2.5 psi (.17 bar) according to the graph for the 18LZ10 element.

Because the viscosity in this sample is 160 SUS (34 cSt), we determine the Viscosity Factor (V_f) by dividing the Operating Fluid Viscosity with the Standard Viscosity of 150 SUS (32 cSt). To best determine your Operating Fluid Viscosity, please reference the chart in Appendix D.

Finally, the overall filter pressure differential, ΔP_{filter}, is calculated by adding $\Delta P_{housing}$ with the true element pressure differential, ($\Delta P_{element} * V_f$). The $\Delta P_{element}$ from the graph has to be multiplied by the viscosity factor to get the true pressure differential across the element.

Solution:

$\Delta P_{housing}$ = 1.5 psi [.10 bar] | $\Delta P_{element}$ = 6 psi [.17 bar]

V_f = 160 SUS (34 cSt) / 150 SUS (32 cSt) = 1.1

ΔP_{filter} = 1.5 psi + (2.5 psi * 1.1) = 4.3 psi

OR

ΔP_{filter} = .10 bar + (.17 bar * 1.1) = .29 bar

Medium Pressure In-Tank Filter

Filter Model Number Selection

How to Build a Valid Model Number for a Schroeder MRT:

BOX 1	BOX 2	BOX 3	BOX 4	BOX 5	BOX 6	BOX 7
MRT –	–	–	–	–	–	

Example: NOTE: One option per box

BOX 1	BOX 2	BOX 3	BOX 4	BOX 5	BOX 6	BOX 7	
MRT –	18 –	LZ10 –	–	S24 S24 –	–		= MRT18LZ10S24S24

BOX 1

Filter Series
MRT

BOX 2

Element Length (in)
18

BOX 3

Element Size and Media	
L3	= L size 3 µ E media (cellulose)
L10	= L size 10 µ E media (cellulose)
LZ1	= L size 1 µ Excellement® Z-Media® (synthetic)
LZ3	= L size 3 µ Excellement® Z-Media® (synthetic)
LZ5	= L size 5 µ Excellement® Z-Media® (synthetic)
LZ10	= L size 10 µ Excellement® Z-Media® (synthetic)
LZ25	= L size 25 µ Excellement® Z-Media® (synthetic)
LDZ1	= L size DirtCatcher® 1 µ Excellement® Z-Media®
LDZ3	= L size DirtCatcher® 3 µ Excellement® Z-Media®
LDZ5	= L size DirtCatcher® 5 µ Excellement® Z-Media®
LDZ10	= L size DirtCatcher® 10 µ Excellement® Z-Media®
LDZ25	= L size DirtCatcher® 25 µ Excellement® Z-Media®

BOX 4

Seal Material
Omit = Buna N

BOX 5
Specification of both ports is required

Inlet Porting		
Port A	Port B	Inlet Porting Location
S = S24	S = S24	
N = None	N = None	

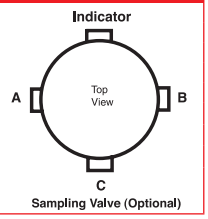

BOX 6

Dirt Alarm® Options		
	Omit =	None
Visual	D5 =	Visual pop-up
Visual with Thermal Lockout	D8 =	Visual w/ thermal lockout
Electrical	MS5 =	Electrical w/ 12 in. 18 gauge 4-conductor cable
	MS5LC =	Low current MS5
	MS10 =	Electrical w/ DIN connector (male end only)
	MS10LC =	Low current MS10
	MS11 =	Electrical w/ 12 ft. 4-conductor wire
	MS12 =	Electrical w/ 5 pin Brad Harrison connector (male end only)
	MS12LC =	Low current MS12
	MS16 =	Electrical w/ weather-packed sealed connector
	MS16LC =	Low current MS16
	MS17LC =	Electrical w/ 4 pin Brad Harrison male connector
Electrical with Thermal Lockout	MS5T =	MS5 (see above) w/ thermal lockout
	MS5LCT =	Low current MS5T
	MS10T =	MS10 (see above) w/ thermal lockout
	MS10LCT =	Low current MS10T
	MS12T =	MS12 (see above) w/ thermal lockout
	MS12LCT =	Low current MS12T
	MS16T =	MS16 (see above) w/ thermal lockout
	MS16LCT =	Low current MS16T
	MS17LCT =	Low current MS17T
Electrical Visual	MS13 =	Supplied w/ threaded connector & light
	MS14 =	Supplied w/ 5 pin Brad Harrison connector & light (male end)
Electrical Visual with Thermal Lockout	MS13DCT =	MS13 (see above), direct current, w/ thermal lockout
	MS13DCLCT =	Low current MS13DCT
	MS14DCT =	MS14 (see above), direct current, w/ thermal lockout
	MS14DCLCT =	Low current MS14DC

BOX 7

Options	
Omit =	No sampling valve
SV =	Up stream sampling valve

NOTES:

Box 2. Replacement element part numbers are a combination of Boxes 2, 3, and 4. Example: 18L3

Accessories for Tank-Mounted Filters

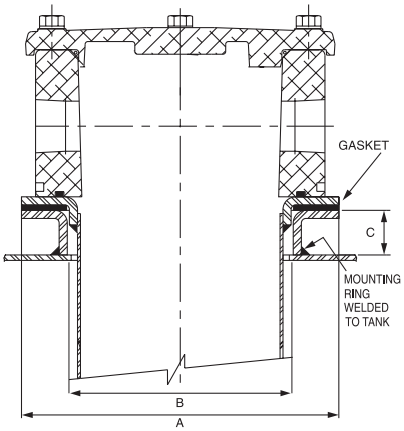

Mounting Ring for ST, ZT, RT, RTI and LRT Models

The mounting ring is welded directly to the hydraulic reservoir. The filter is then mounted to the mounting ring with bolts converting the filter to a "weld in" design. The mounting ring eliminates the need to drill and tap the hydraulic reservoir.

Model Number	Part Number	A	B	C
ST, RT, RTI, LRT	A-LFT-813	7.00 (178)	5.00 (127)	1.00 (25)
ST, RT, RTI, LRT High Version	A-LFT-1448	7.00 (178)	5.00 (127)	1.50 (38)
ZT	A-LFT-1295	6.25 (159)	3.62 (92)	.88 (22)

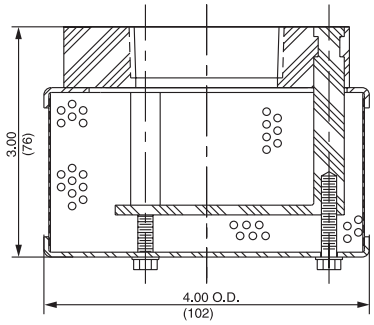

Diffuser for KFT, RT and LRT Models

The diffuser option (designated as D for outlet porting option in model number) is threaded to the bushing on the filter bowl below the outlet opening to help decrease turbulent flow in the hydraulic reservoir.

No other outlet port options are available if the diffuser is used.

Model Number	Part Number	NPTF
RT, KFT	A-LFT-1506	1½"
LRT	A-LFT-1507	2"

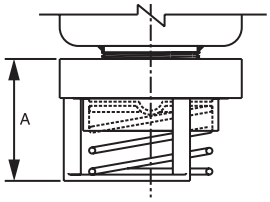

Check Valve for ST, KFT, RT, LRT and BFT Models

The check valve option (designated as C for outlet porting option in model number) makes it possible to service the filter without draining the oil from the reservoir when the filter is mounted below the oil level. It also prevents reservoir siphoning when system components are serviced.

The check valve can also be used on other reservoir return flow lines, where components upstream of the check valve can be serviced without the loss of reservoir oil. The spring setting is .75-1.00 psi cracking. Order by part number shown in chart.

No other outlet port options are available if the check valve is used.

Model Number	Part Number	NPTF	A
ST, KFT, RT	A-LFT-158Q-1	1½"	2.34 (59)
LRT	A-LFT-880	2"	2.34 (59)
BFT	A-BFT-103	3"	4.50 (114)

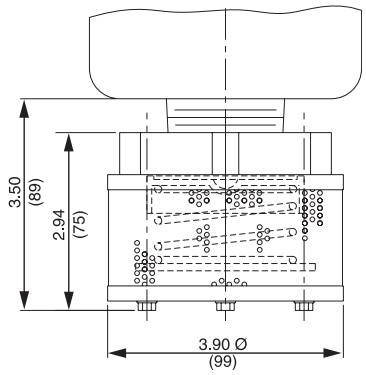

Check Valve Diffuser Combination for KFT and RT Models

The diffuser/check valve option (designated as CD for outlet porting option in model number) is threaded on to the outlet port and combines the advantages of both separate options in one assembly.

Available as a separate item with 1½" NPT female threads, order part number A-LFT-1208.

No other outlet port options are available if the check valve/ diffuser is used.

Accessories for Tank-Mounted Filters

Tube Adapter Outlet Port for KFT, RT, LRT and BFT Models

The tube adapter outlet port option (designated as T for outlet porting option in model number) provides the means to direct flow to the bottom of the hydraulic reservoir. Other tube lengths are available for quantity purchases. Contact your Schroeder distributor for details.

Model Number	Dimension A (O.D.) in. (mm)
RT	1.62 (41)
LRT	2.25 (57)
BFT	3.50 (89)

Note: No other outlet port options are available if the tube adapter is used.

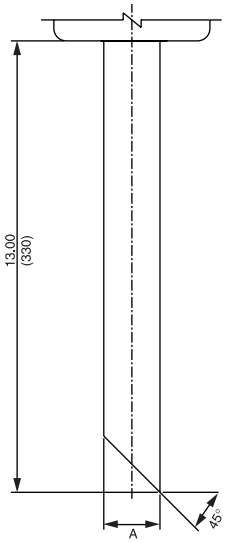

Threaded Outlet Port for ZT, KFT, RT, LRT and BFT Models

The threaded male outlet port is standard on the KFT, RT, LRT and BFT models, and is available as an option on the ZT filter by designating OP for the outlet porting options in the model number.

- RT is furnished with 1½" NPT Male (standard)
- LRT is furnished with 2" NPT Male (standard)
- KFT is furnished with 1 1/2" NPT Male (standard)
- BFT is furnished with 3" NPT Male (standard)
- ZT is furnished with 1½" NPT Male (optional)

Spin-On Filter PAF1

Model No. of filter in photograph is PAF16PZ10SY2.

Features and Benefits

- Spin-On with full ported die cast aluminum head for minimal pressure drop
- Offered in pipe and SAE straight thread porting
- Spin-On thread = 1.00-12UNF-2B
- Visual gauge or electrical switch dirt alarms
- Small profile for use in limited space
- Same day shipment model available

20 gpm
75 L/min
100 psi
7 bar

Filter Housing Specifications

Flow Rating:	Up to 20 gpm (75 L/min) for 150 SUS (32 cSt) fluids
Max. Operating Pressure:	100 psi (7 bar)
Min. Yield Pressure:	150 psi (10 bar), per NFPA T2.6.1
Rated Fatigue Pressure:	Contact factory
Temp. Range:	-20°F to 225°F (-29°C to 107°C)
Bypass Setting:	Cracking: 30 psi (2 bar) Full Flow: 36 psi (2 bar)
Porting Head & Cap: Element Case:	Die Cast Aluminum Steel
Weight of PAF1-6P:	1.8 lbs. (0.8 kg)
Element Change Clearance:	2.50" (65 mm)

Fluid Compatibility

Type Fluid	Appropriate Schroeder Media
Petroleum Based Fluids	All E media (cellulose) and Z-Media® (synthetic)
High Water Content	3 and 10 µ Z-Media® (synthetic)
Invert Emulsions	10 µ Z-Media® (synthetic)
Water Glycols	3 and 10 µ Z-Media® (synthetic)

Spin-On Filter

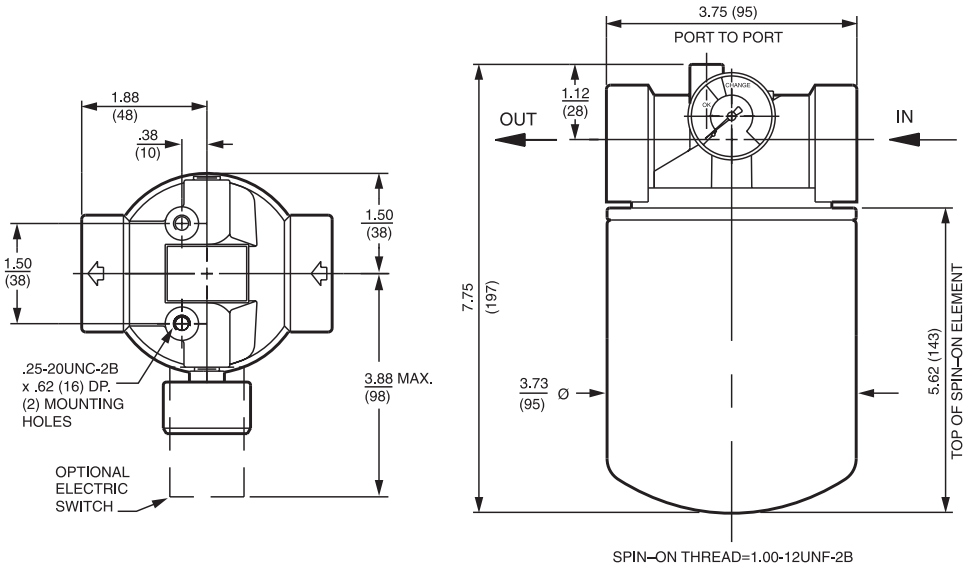

Installation instructions included on element.

Metric dimensions in ( ).

Element Performance Information & Dirt Holding Capacity

Element	Filtration Ratio Per ISO 4572/NFPA T3.10.8.8 Using automated particle counter (APC) calibrated per ISO 4402			Filtration Ratio per ISO 16889 Using APC calibrated per ISO 11171	
	$ß_x \geq 75$	$ß_x \geq 100$	$ß_x \geq 200$	$ß_x(c) \geq 200$	$ß_x(c) \geq 1000$
P10	15.5	16.2	18.0	N/A	N/A
PZ10	7.4	8.2	10.0	8.0	10.0
PZ25	18.0	20.0	22.5	19.0	24.0

Element	DHC (gm)	Element	DHC (gm)
P10	37		
PZ10	16.8	PZ25	23.0

Element Collapse Rating: 100 psid (7 bar)

Flow Direction: Outside In

Element Nominal Dimensions: 3.75" (95 mm) O.D. x 5.5" (140 mm) long

Pressure Drop Information

Based on Flow Rate and Viscosity

$\Delta P_{housing}$

PAF1 $\Delta P_{housing}$ for fluids with sp gr (specific gravity) = 0.86:

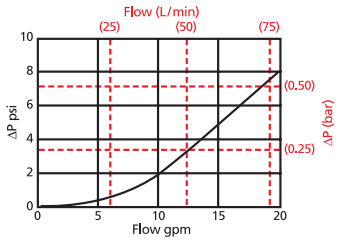

$\Delta P_{element}$

PZ

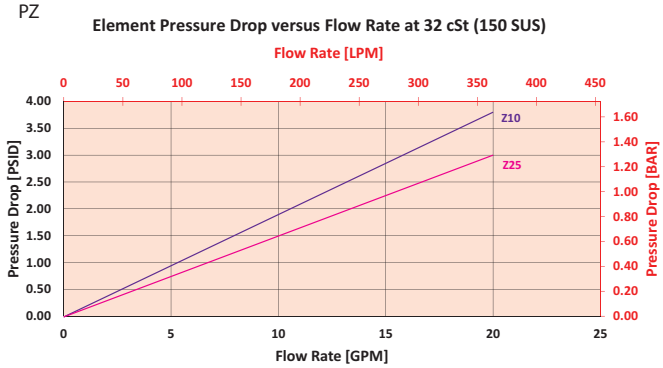

$$\Delta P_{filter} = \Delta P_{housing} + (\Delta P_{element} * V_f)$$

Exercise:

Determine ΔP_{filter} at 10 gpm (37.9 L/min) for PAF16PZ25PY2 using 160 SUS (34 cSt) fluid.

Use the housing pressure curve to determine $\Delta P_{housing}$ at 10 gpm. In this case, $\Delta P_{housing}$ is 2 psi (.14 bar) on the graph for the PAF1 housing.

Use the element pressure curve to determine $\Delta P_{element}$ at 10 gpm. In this case, $\Delta P_{element}$ is 1.5 psi (.10 bar) according to the graph for the PZ25 element.

Because the viscosity in this sample is 160 SUS (34 cSt), we determine the Viscosity Factor (V_f) by dividing the Operating Fluid Viscosity with the Standard Viscosity of 150 SUS (32 cSt). To best determine your Operating Fluid Viscosity, please reference the chart in Appendix D.

Finally, the overall filter pressure differential, ΔP_{filter}, is calculated by adding $\Delta P_{housing}$ with the true element pressure differential, ($\Delta P_{element}$*V_f). The $\Delta P_{element}$ from the graph has to be multiplied by the viscosity factor to get the true pressure differential across the element.

Solution:

$\Delta P_{housing}$ = 2 psi [.14 bar] | $\Delta P_{element}$ = 1.5 psi [.10 bar]

V_f = 160 SUS (34 cSt) / 150 SUS (32 cSt) = 1.1

ΔP_{filter} = 2 psi + (1.5 psi * 1.1) = 3.7 psi

OR

ΔP_{filter} = 14 bar + (.10 bar * 1.1) = .25 bar

Note:
If your element is not graphed, use the following equation:
$\Delta P_{element}$ = Flow Rate x $\Delta P_{f.}$ Plug this variable into the overall pressure drop equation.

Ele.	ΔP
P10	0.17

PAF1 Spin-On Filter

Filter Model Number Selection

Highlighted product eligible for QuickDelivery

How to Build a Valid Model Number for a Schroeder PAF1:

BOX 1		BOX 2		BOX 3		BOX 4		BOX 5		BOX 6
PAF1	–		–		–		–		–	

Example: NOTE: One option per box

BOX 1		BOX 2		BOX 3		BOX 4		BOX 5		BOX 6	
PAF1	–	6	–	P10	–		–	P	–	Y2	= PAF16P10PY2

BOX 1

Filter Series
PAF1

BOX 2

Element Length (in)
6

BOX 3

Element Size and Media
P10 = P size 10 µ E media (cellulose)
PZ10 = P size 10 µ Excellement® Z-Media® (synthetic)
PZ25 = P size 25 µ Excellement® Z-Media® (synthetic)

BOX 4

Seal Material
Omit = Buna N

BOX 5

Inlet Porting
P = ¾" NPTF
S = SAE-12

BOX 6

Dirt Alarm® Options		
	Omit =	None
Visual	Y2 =	Back-mounted tri-color gauge
Electrical	ES =	Electric switch

NOTE:

Box 2. Replacement element part numbers are a combination of Boxes 3 and 4. Example: P10

50 gpm
190 L/min
100 psi
7 bar

Model No. of filter in photograph is MAF17M10S.

Features and Benefits

- Spin-On with full ported die cast aluminum head for minimal pressure drop
- Offered in pipe, SAE straight thread and ISO 228 porting
- Spin-On thread = 1.50-16UN-2B
- Visual gauge or electrical switch dirt alarms
- Small profile for use in limited space
- Available in 7" and 10" element lengths
- Available with NPTF inlet and outlet female test ports

Filter Housing Specifications

Flow Rating:	Up to 50 gpm (190 L/min) for 150 SUS (32 cSt) fluids
Max. Operating Pressure:	100 psi (7 bar)
Min. Yield Pressure:	200 psi (10 bar), per NFPA T2.6.1
Rated Fatigue Pressure:	Contact factory
Temp. Range:	-20°F to 225°F (-29°C to 107°C)
Bypass Setting:	Cracking: 30 psi (2 bar) Full Flow: 48 psi (3 bar)
Porting Head & Cap: Element Case:	Die Cast Aluminum Steel
Weight of MAF1-7M: Weight of MAF1-10M:	4.2 lbs. (1.9 kg) 5.0 lbs. (2.3 kg)
Element Change Clearance:	2.50" (65 mm)

Fluid Compatibility

Type Fluid	Appropriate Schroeder Media
Petroleum Based Fluids	All E media (cellulose) and Z-Media® (synthetic)
High Water Content	3 and 10 µ Z-Media® (synthetic)
Invert Emulsions	10 µ Z-Media® (synthetic)
Water Glycols	3 and 10 µ Z-Media® (synthetic)

MAF1 Spin-On Filter

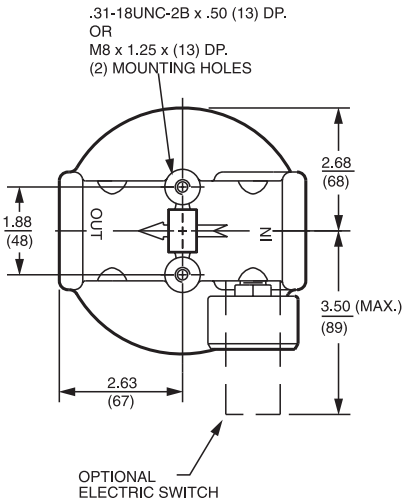

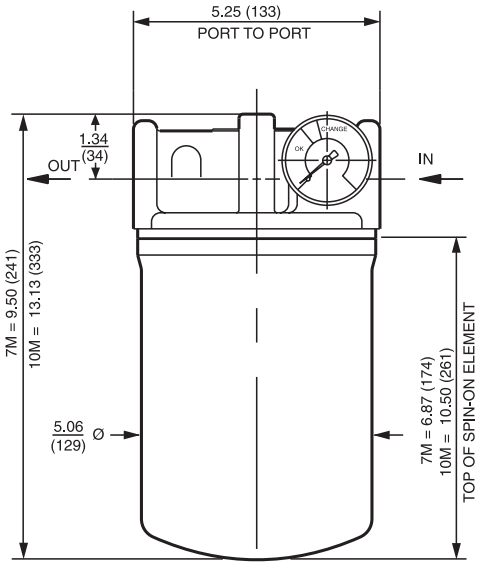

Installation instructions included on element.

Metric dimensions in ( ).

Element Performance Information & Dirt Holding Capacity

Element	Filtration Ratio Per ISO 4572/NFPA T3.10.8.8 Using automated particle counter (APC) calibrated per ISO 4402			Filtration Ratio per ISO 16889 Using APC calibrated per ISO 11171	
	$ß_x \geq 75$	$ß_x \geq 100$	$ß_x \geq 200$	$ß_x(c) \geq 200$	$ß_x(c) \geq 1000$
7MZ3/10MZ3	<1.0	<1.0	<2.0	<4.0	4.8
7MZ10/10MZ10	7.4	8.2	10.0	8.0	10.0
10MZW10	N/A	N/A	N/A	6.9	8.6

Element	DHC (gm)	Element	DHC (gm)
7MZ3	105		
7MZ10	104	10MZW10	53

Element Collapse Rating: 100 psid (7 bar)

Flow Direction: Outside In

Element Nominal Dimensions: 7M: 5.0" (125 mm) O.D. x 7.0" (180 mm) long
10M: 5.0" (125 mm) O.D. x 10.5" (261 mm) long

Pressure Drop Information

Based on Flow Rate and Viscosity

$\Delta P_{housing}$

MAF1 $\Delta P_{housing}$ for fluids with sp gr (specific gravity) = 0.86:

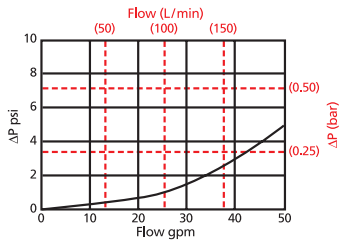

$\Delta P_{element}$

7MZ

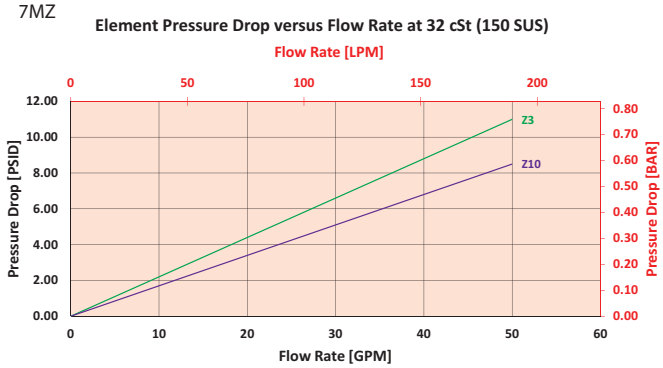

10MZ

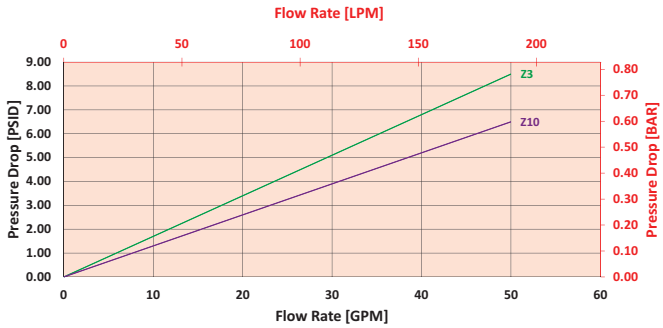

$$\Delta P_{filter} = \Delta P_{housing} + (\Delta P_{element} * V_f)$$

Exercise:

Determine ΔP_{filter} at 40 gpm (151.6 L/min) for MAF17MZ10PY2 using 160 SUS (34 cSt) fluid.

Use the housing pressure curve to determine $\Delta P_{housing}$ at 40 gpm. In this case, $\Delta P_{housing}$ is 3 psi (.21 bar) on the graph for the MAF1 housing.

Use the element pressure curve to determine $\Delta P_{element}$ at 40 gpm. In this case, $\Delta P_{element}$ is 7 psi (.48 bar) according to the graph for the 7MZ10 element.

Because the viscosity in this sample is 160 SUS (34 cSt), we determine the Viscosity Factor (V_f) by dividing the Operating Fluid Viscosity with the Standard Viscosity of 150 SUS (32 cSt). To best determine your Operating Fluid Viscosity, please reference the chart in Appendix D.

Finally, the overall filter pressure differential, ΔP_{filter}, is calculated by adding $\Delta P_{housing}$ with the true element pressure differential, ($\Delta P_{element}$*V_f). The $\Delta P_{element}$ from the graph has to be multiplied by the viscosity factor to get the true pressure differential across the element.

Solution:

$\Delta P_{housing}$ = 3 psi [.21 bar] | $\Delta P_{element}$ = 7 psi [.48 bar]

V_f = 160 SUS (34 cSt) / 150 SUS (32 cSt) = 1.1

ΔP_{filter} = 3 psi + (7 psi * 1.1) = 10.7 psi

OR

ΔP_{filter} = .21 bar + (.48 bar * 1.1) = .74 bar

Note:
If your element is not graphed, use the following equation:
$\Delta P_{element}$ = Flow Rate x $\Delta P_{f.}$ Plug this variable into the overall pressure drop equation.

Ele.	ΔP
7M3	0.23
7M10	0.14

MAF1 Spin-On Filter

Filter Model Number Selection

How to Build a Valid Model Number for a Schroeder MAF1:

BOX 1		BOX 2		BOX 3		BOX 4		BOX 5		BOX 6		BOX 7
MAF1	–		–		–		–		–		–	

Example: NOTE: One option per box

BOX 1		BOX 2		BOX 3		BOX 4		BOX 5		BOX 6		BOX 7	
MAF1	–	7	–	M3	–		–	P	–	Y2	–		= MAF17M3PY2

BOX 1

Filter Series
MAF1

BOX 2

Element Length (in)
7
10

BOX 3

Element Size and Media
M3 = M size 3 µ E media (cellulose)
M10 = M size 10 µ E media (cellulose)
MZ3 = M size 3 µ Excellement® Z-Media® (synthetic)
MZ10 = M size 10 µ Excellement® Z-Media® (synthetic)
MZW10 = M size 10 µ Aqua-Excellement™ ZW media
MW = M size W media (water removal)

BOX 4

Seal Material
Omit = Buna N
V = Viton®

BOX 5

Porting Options
P = 1¼" NPTF
S = SAE-20
B = ISO 228 G-1¼"

BOX 6

Dirt Alarm® Options	
	Omit = None
Visual	Y2 = Back-mounted tri-color gauge
Electrical	ES = Electric switch

BOX 7

Additional Options
Omit = None
L = Two ⅛" NPTF inlet and outlet female test ports

NOTES:

Box 2. Replacement element part numbers are a combination of Boxes 2, 3, and 4. Replacement element part numbers for 7" length begin with M. Replacement element part numbers for 10" length begin with 10M. Examples: M3V; 10MZ3V 10" only available with MZ3 and MZ10.

Box 3. ZW media only available for 10" element.

Box 4. For option V, all aluminum parts are anodized. Viton® is a registered trademark of DuPont Dow Elastomers.

Box 5. B porting option supplied with metric mounting holes.

Model No. of filter in photograph is MF27M10SD5.

Features and Benefits

- Spin-On with full ported cast iron head for minimal pressure drop
- Offered in pipe, SAE straight thread and ISO 228 porting
- Spin-On thread = 1.50-16UN-2B
- Various Dirt Alarm® options
- Available in 7" and 10" element lengths

60 gpm
230 L/min
150 psi
10 bar

Filter Housing Specifications

Flow Rating:	Up to 60 gpm (230 L/min) for 150 SUS (32 cSt) fluids
Max. Operating Pressure:	150 psi (10 bar)
Min. Yield Pressure:	250 psi (17 bar), per NFPA T2.6.1
Rated Fatigue Pressure:	Contact factory
Temp. Range:	-20°F to 225°F (-29°C to 107°C)
Bypass Setting:	Cracking: 30 psi (2 bar) Full Flow: 48 psi (3 bar)
Porting Head: Element Case:	Cast Iron Steel
Weight of MF2-7M:	8.6 lbs. (3.9 kg)
Element Change Clearance:	1.50" (40 mm)

Fluid Compatibility

Type Fluid	Appropriate Schroeder Media
Petroleum Based Fluids	All E media (cellulose) and Z-Media® (synthetic)
High Water Content	3 and 10 µ Z-Media® (synthetic)
Invert Emulsions	10 µ Z-Media® (synthetic)
Water Glycols	3 and 10 µ Z-Media® (synthetic)

Spin-On Filter

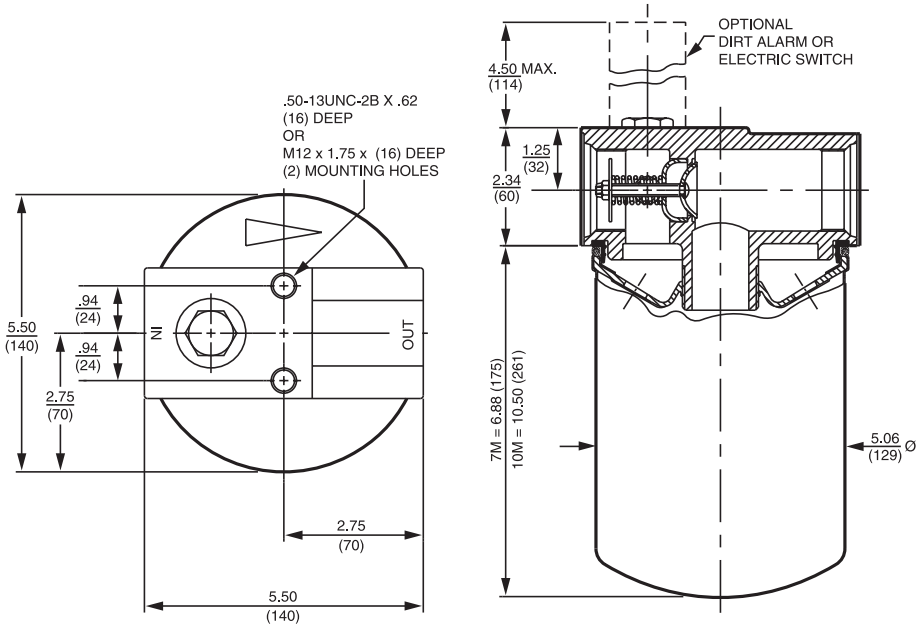

SPIN-ON THREAD=1.50-16UN-2B

Installation instructions included on element.

Metric dimensions in ( ).

Element Performance Information & Dirt Holding Capacity

Element	Filtration Ratio Per ISO 4572/NFPA T3.10.8.8 Using automated particle counter (APC) calibrated per ISO 4402			Filtration Ratio per ISO 16889 Using APC calibrated per ISO 11171	
	$ß_x \geq 75$	$ß_x \geq 100$	$ß_x \geq 200$	$ß_x^{(c)} \geq 200$	$ß_x^{(c)} \geq 1000$
7MZ3/10MZ3	<1.0	<1.0	<2.0	<4.0	4.8
7MZ10/10MZ10	7.4	8.2	10.0	8.0	10.0
10MZW10	N/A	N/A	N/A	6.9	8.6

Element	DHC (gm)	Element	DHC (gm)
7MZ3	105		
7MZ10	104	10MZW10	53

Element Collapse Rating:	100 psid (7 bar)
Flow Direction:	Outside In
Element Nominal Dimensions:	7M: 5.0" (125 mm) O.D. x 7.0" (180 mm) long
	10M: 5.0" (125 mm) O.D. x 10.5" (261 mm) long

Pressure Drop Information

Based on Flow Rate and Viscosity

$\Delta P_{housing}$

MF2 $\Delta P_{housing}$ for fluids with sp gr (specific gravity) = 0.86:

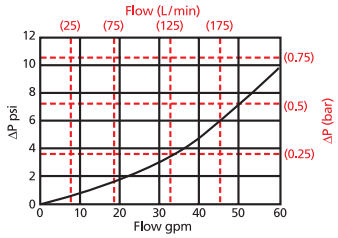

$\Delta P_{element}$

7MZ

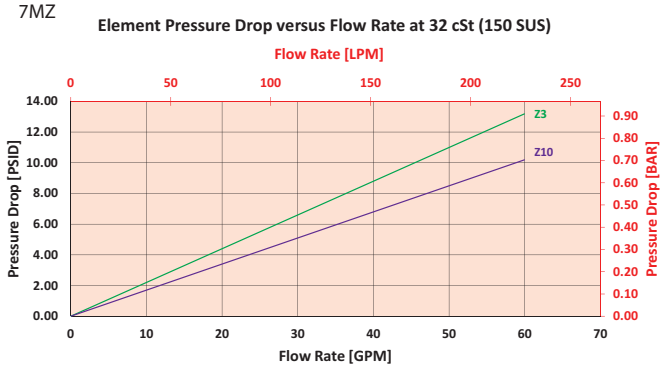

$$\Delta P_{filter} = \Delta P_{housing} + (\Delta P_{element} * V_f)$$

Exercise:

Determine ΔP_{filter} at 40 gpm (151.6 L/min) for MF27MZ10PD5 using 160 SUS (34 cSt) fluid.

Use the housing pressure curve to determine $\Delta P_{housing}$ at 40 gpm. In this case, $\Delta P_{housing}$ is 5 psi (.34 bar) on the graph for the MF2 housing.

Use the element pressure curve to determine $\Delta P_{element}$ at 40 gpm. In this case, $\Delta P_{element}$ is 7 psi (.48 bar) according to the graph for the 7MZ10 element.

Because the viscosity in this sample is 160 SUS (34 cSt), we determine the Viscosity Factor (V_f) by dividing the Operating Fluid Viscosity with the Standard Viscosity of 150 SUS (32 cSt). To best determine your Operating Fluid Viscosity, please reference the chart in Appendix D.

Finally, the overall filter pressure differential, ΔP_{filter}, is calculated by adding $\Delta P_{housing}$ with the true element pressure differential, ($\Delta P_{element}$*V_f). The $\Delta P_{element}$ from the graph has to be multiplied by the viscosity factor to get the true pressure differential across the element.

Solution:

$\Delta P_{housing}$ = 5 psi [.34 bar] | $\Delta P_{element}$ = 7 psi [.48 bar]

V_f = 160 SUS (34 cSt) / 150 SUS (32 cSt) = 1.1

ΔP_{filter} = 5 psi + (7 psi * 1.1) = 12.7 psi

OR

ΔP_{filter} = .34 bar + (.48 bar * 1.1) = .87 bar

Note:
If your element is not graphed, use the following equation:
$\Delta P_{element}$ = Flow Rate x $\Delta P_{f.}$ Plug this variable into the overall pressure drop equation.

Ele.	ΔP
7M3	0.23
7M10	0.14

MF2 Spin-On Filter

Filter Model Number Selection

How to Build a Valid Model Number for a Schroeder MF2:

BOX 1		BOX 2		BOX 3		BOX 4		BOX 5		BOX 6
MF2	–		–		–		–		–	

Example: Option 1 NOTE: One option per box

BOX 1		BOX 2		BOX 3		BOX 4		BOX 5		BOX 6	
MF2	–	7	–	M3	–		–	P	–	D5	= MF27M3PD5

BOX 1

Filter Series
MF2

BOX 2

Element Length (in)
7
10

BOX 3

Element Size and Media
M3 = M size 3 µ E media (cellulose)
M10 = M size 10 µ E media (cellulose)
MZ3 = M size 3 µ Excellement® Z-Media® (synthetic)
MZ10 = M size 10 µ Excellement® Z-Media® (synthetic)
MZW10 = M size 10 µ Aqua-Excellement™ ZW media
MW = M size W media (water removal)

BOX 4

Seal Material
Omit = Buna N
V = Viton®

BOX 5

Porting Options
P = 1¼" NPTF
S = SAE-20
B = ISO 228 G-1¼"

BOX 6

Dirt Alarm® Options		
	Omit =	None
Visual	D5 =	Visual pop-up
Visual with Thermal Lockout	D8 =	Visual w/ thermal lockout
Electrical	MS5 =	Electrical w/ 12 in. 18 gauge 4-conductor cable
	MS5LC =	Low current MS5
	MS10 =	Electrical w/ DIN connector (male end only)
	MS10LC =	Low current MS10
	MS11 =	Electrical w/ 12 ft. 4-conductor wire
	MS12 =	Electrical w/ 5 pin Brad Harrison connector (male end only)
	MS12LC =	Low current MS12
	MS16 =	Electrical w/ weather-packed sealed connector
	MS16LC =	Low current MS16
	MS17LC =	Electrical w/ 4 pin Brad Harrison male connector
Electrical with Thermal Lockout	MS5T =	MS5 (see above) w/ thermal lockout
	MS5LCT =	Low current MS5T
	MS10T =	MS10 (see above) w/ thermal lockout
	MS10LCT =	Low current MS10T
	MS12T =	MS12 (see above) w/ thermal lockout
	MS12LCT =	Low current MS12T
	MS16T =	MS16 (see above) w/ thermal lockout
	MS16LCT =	Low current MS16T
	MS17LCT =	Low current MS17T
Electrical Visual	MS13 =	Supplied w/ threaded connector & light
	MS14 =	Supplied w/ 5 pin Brad Harrison connector & light (male end)
Electrical Visual with Thermal Lockout	MS13DCT =	MS13 (see above), direct current, w/ thermal lockout
	MS13DCLCT =	Low current MS13DCT
	MS14DCT =	MS14 (see above), direct current, w/ thermal lockout
	MS14DCLCT =	Low current MS14DCT

NOTES:

Box 2. Replacement element part numbers are a combination of Boxes 2, 3, and 4. Replacement element part numbers for 7" length begin with M. Replacement element part numbers for 10" length begin with 10M.
Example: M3; 10MZ3
10" only available with MZ3 and MZ10.

Box 3. ZW media only available for 10" element.

Box 4. Viton® is a registered trademark of DuPont Dow Elastomers.

Box 5. B porting option supplied with metric mounting holes.