Section 4:
up to 1500 psi

MEDIUM PRESSURE FILTERS

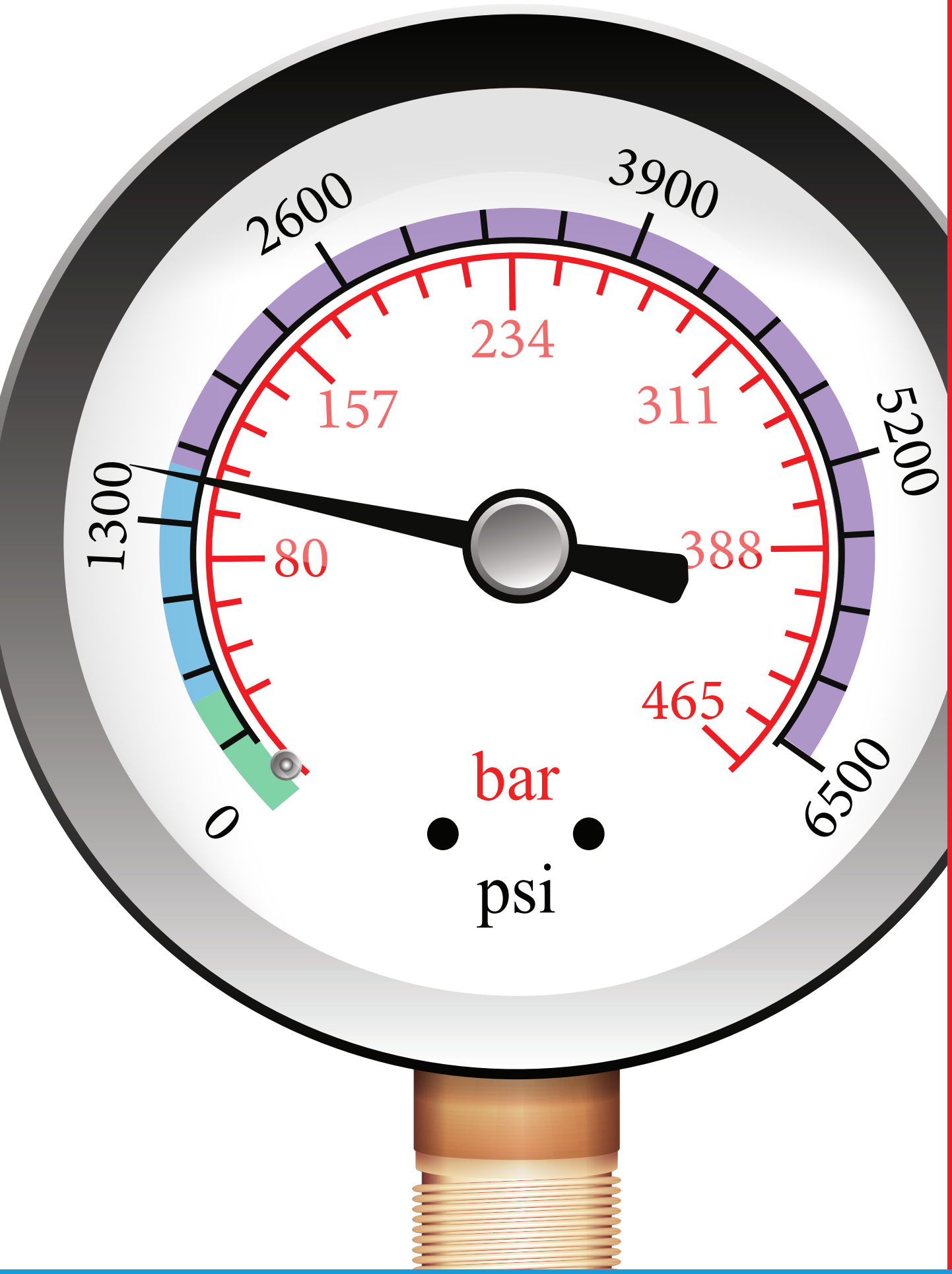

Section 4 Medium Pressure Filters Selection Guide

Medium Pressure Filters (up to 1500 psi)	Pressure psi (bar)	Flow gpm (L/min)	Element Length/Size	Page
Top-Ported Medium Pressure Return Line Filters				
GH QUALITY PROTECTION	725 (50)	35 (130)	6G, 9G	163
RLT	1400 (97)	70 (265)	9V, 14V	169
KF5 QUALITY PROTECTION	500 (35)	100 (380)	K	173
SRLT	1400 (100)	25 (100)	6R	177
Base-Ported Medium Pressure Filters				
K9 QUALITY PROTECTION	900 (60)	100 (380)	K, KK, 27K	181
2K9 QUALITY PROTECTION	900 (60)	100 (380)	K, KK, 27K	185
3K9 QUALITY PROTECTION	900 (60)	100 (380)	K, KK, 27K	185
QF5	500 (35)	300 (1135)	16Q, 16QCLQF, 16QPML, 39Q, 39QCLQF, 39QPML	189
QF5i	500 (35)	120 (454)	16QCLQF, 39QCLQF	193
2QF5	500 (35)	300 (1135)	16Q, 16QCLQF, 16QPML, 39Q, 39QCLQF, 39QPML	197
3QF5	500 (35)	300 (1135)	16Q, 16QCLQF, 16QPML, 39Q, 39QCLQF, 39QPML	197
QFD5	500 (35)	350 (1325)	16Q, 16QCLQF, 16QPML, 39Q, 39QCLQF, 39QPML	201
QF15	1500 (100)	450 (1700)	16Q, 16QCLQF, 16QPML, 39Q, 39QCLQF, 39QPML	205
QLF15	1500 (100)	500 (1900)	16Q, 16QCLQF, 16QPML, 39Q, 39QCLQF, 39QPML	209
SSQLF15	1500 (100)	500 (1900)	16Q, 16QPML, 39Q, 39QPML	213

Model No. of filters in photograph are GH6, GH9, GH11, and GH14.

Features and Benefits

- Variety of differential indicator port options (visual and electrical indicators)
- Leak proof bar indicator, rugged visual indicator with protective aluminum shield is standard
- Proprietary bowl to element seal - minimizes potential leakage point by use of one seal on element
- Cartridge style element (non spin-on) that is proprietary and patented with integrated bypass valve features
- Wide variety of media grades that can be application specific
- Light weight bowl design with replaceable element minimizes landfill waste
- Mounting interchangeability with competitor's filter head
- The inherent capability to pre-print the perforated outer element wrap provides a branding solution that helps to capture after-market replacement element sales
- GH6 – Bolt up cartridge element replacement for the Donaldson DURAMAX HMK04 w/ 5.9" Spin-On Can
- GH9 – Bolt up cartridge element replacement for the Donaldson DURAMAX HMK04 w/ 9.4" Spin-On Can
- GH11 – Bolt up cartridge element replacement for the Donaldson DURAMAX HMK05 w/ 11.6" Spin-On Can
- GH14 – Bolt up cartridge element replacement for the Donaldson DURAMAX HMK05 w/ 14.3" Spin-On Can
- Same day shipment model available (GH6 & GH9)

Part of Schroeder Industries' Energy Sustainability Initiative

35-112 gpm
130-425 L/min
500-725 psi
35-50 bar

Filter Housing Specifications

	GH6	GH9	GH11	GH14
Flow Rating: (150 SUS (32 cSt) fluids)	Up to 35 gpm (130 L/min)	Up to 35 gpm (130 L/min)	Up to 87 gpm (325 L/min)	Up to 112 gpm (425 L/min)
Max. Operating Pressure:	725 psi (50 bar)	725 psi (50 bar)	500 psi (35 bar)	500 psi (35 bar)
Min. Yield Pressure:	2600 psi (179 bar)	2600 psi (179 bar)	2700 psi (186 bar)	2700 psi (186 bar)
Rated Fatigue Pressure:	725 psi (50 bar)	725 psi (50 bar)	500 psi (35 bar)	500 psi (35 bar)
Temp. Range:	-20°F to 225°F (-29°C to 107°C)	-20°F to 225°F (-29°C to 107°C)	-22°F to 212°F (-30°C to 100°C)	-22°F to 212°F (-30°C to 100°C)
Bypass Setting:	25 psi (1.7 bar) standard 50 psi (3.5 bar) optional Non-Bypassing	25 psi (1.7 bar) standard 50 psi (3.5 bar) optional Non-Bypassing	43 psi (3 bar) standard 87 psi (6 bar) optional Non-Bypassing	43 psi (3 bar) standard 87 psi (6 bar) optional Non-Bypassing
Porting Head:	Cast Aluminum	Cast Aluminum	Cast Aluminum	Cast Aluminum
Element Case:	Aluminum	Aluminum	Aluminum	Aluminum
Weight:	3.2 lbs (1.4 kg)	3.8 lbs (1.7 kg)	8.0 lbs (3.6 kg)	10.0 lbs (4.5 kg)
Element Change Clearance:	2" (50 mm)	2" (50 mm)	7.4" (187 mm)	7.4" (187 mm)

Fluid Compatibility

Type Fluid	Appropriate Schroeder Media
Petroleum Based Fluids	All media (synthetic) and H media (Hydraspin)

HydraSPIN Filter Series

Dimensions (GH6 & GH9)

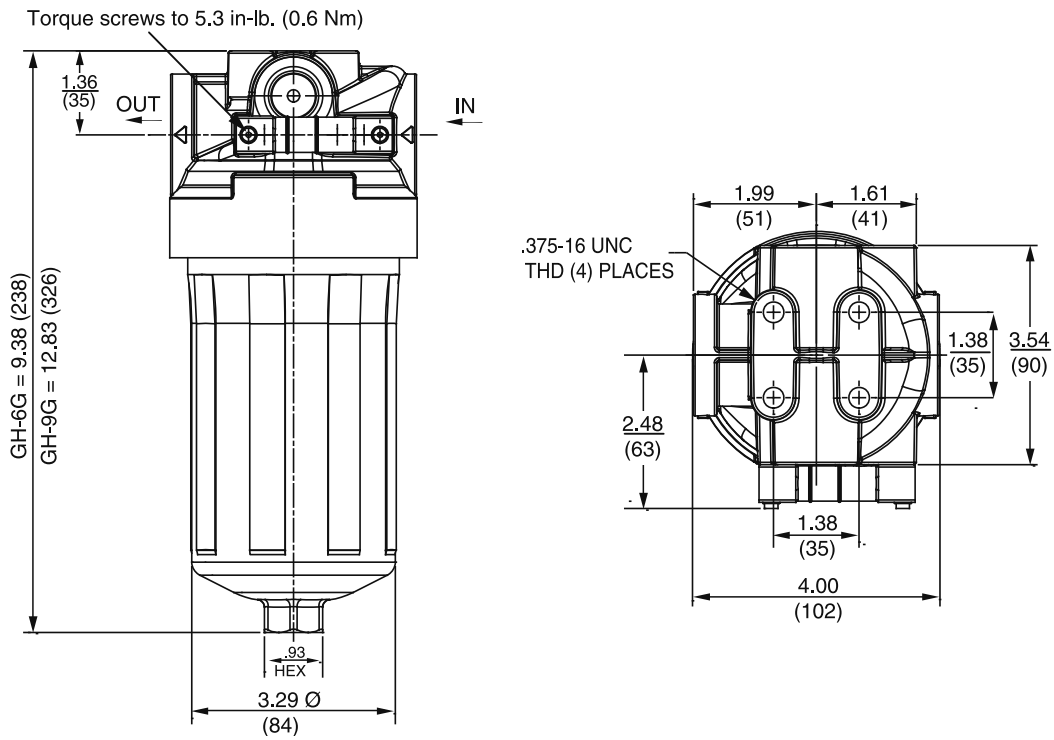

Metric dimensions in ( ).

Element Performance Information & Dirt Holding Capacity

Media Type	Element	Filtration Ratio Per ISO 4572/NFPA T3.10.8.8 Using automated particle counter (APC) calibrated per ISO 4402			Filtration Ratio per ISO 16889 Using APC calibrated per ISO 11171	
		$ß_x \geq 75$	$ß_x \geq 100$	$ß_x \geq 200$	$ß_x(c) \geq 200$	$ß_x(c) \geq 1000$
Resin Impregnated Cellulose Media	6G3/9G3	6.8	7.5	10.0	N/A	N/A
	6G10/9G10	15.5	16.2	18.0	N/A	N/A
Traditional Excellement® Z-Media®	6GZ3 / 9GZ3	<1.0	<1.0	<2.0	<4.0	4.8
	6GZ5 / 9GZ5	2.5	3.0	4.0	4.8	6.3
	6GZ10 / 9GZ10	7.4	8.2	10.0	8.0	10.0
	6GZ25 / 9GZ25	18.0	20.0	22.5	19.0	24.0
Hydraspin H Media, designed to specifically reduce filter pressure drop	6GH10/ 9GH10	N/A	N/A	N/A	10.6	13.0

Media Type	Element	DHC (gm)
Resin Impregnated Cellulose Media	6G3/9G3	18/30
	6G10/9G10	15/25
Traditional Excellement® Z-Media®	6GZ3 / 9GZ3	30/51
	6GZ5 / 9GZ5	24.5/42
	6GZ10 / 9GZ10	31/49
	6GZ25 / 9GZ25	34/58
Hydraspin H Media, designed to specifically reduce filter pressure drop	6GH10/9GH10	12/20

Element Collapse Rating: 250 psid (17.2 bar) for standard and non-bypassing elements

Flow Direction: Outside In

Element Nominal Dimensions: 6G: 3.25" (82 mm) O.D. x 5.7" (144 mm) long
9G: 3.25" (82 mm) O.D. x 9.0" (229 mm) long

Dimensions (GH11 & GH14)

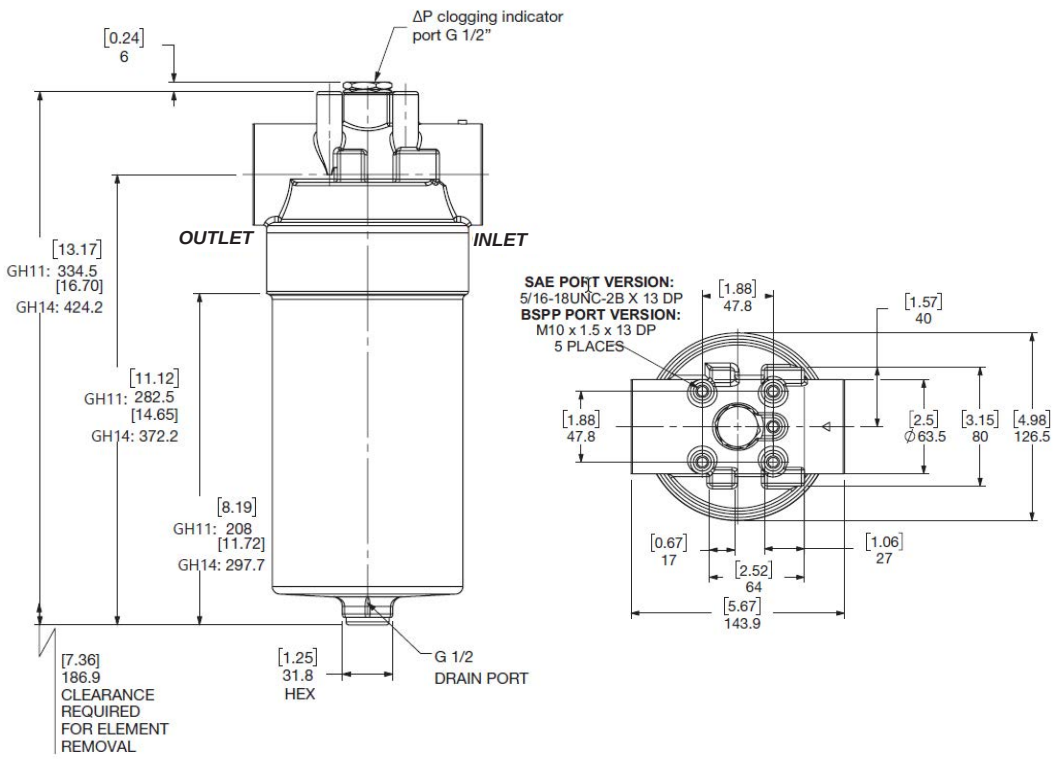

Metric dimensions in ( ).

Element Performance Information & Dirt Holding Capacity

Media Type	Element	Filtration Ratio Per ISO 4572/NFPA T3.10.8.8 Using automated particle counter (APC) calibrated per ISO 4402			Filtration Ratio per ISO 16889 Using APC calibrated per ISO 11171	
		$ß_x \geq 75$	$ß_x \geq 100$	$ß_x \geq 200$	$ß_x(c) \geq 200$	$ß_x(c) \geq 1000$
Traditional Excellement® Z-Media®	11GZ3/14GZ3	<1.0	<1.0	<2.0	<4.0	4.8
	11GZ5/14GZ5	2.5	3.0	4.0	4.8	6.3
	11GZ10/14GZ10	7.4	8.2	10.0	8.0	10.0
	11GZ25 /14GZ25	18.0	20.0	22.5	19.0	24.0

Media Type	Element	DHC (gm)
Traditional Excellement® Z-Media®	11GZ3/14GZ3	53/75
	11GZ5/14GZ5	75/105
	11GZ10/14GZ10	60/84
	11GZ25/14GZ25	61/85

Element Collapse Rating: 290 psid (17.2 bar) for standard and non-bypassing elements

Flow Direction: Outside In

Element Nominal Dimensions: 11G: 3.7" (94 mm) O.D. x 7.6" (193 mm) long
14G: 3.7" (94 mm) O.D. x 11.1" (282 mm) long

Pressure Drop Information (GH6 & GH9)

Based on Flow Rate and Viscosity

$\Delta P_{housing}$

GH $\Delta P_{housing}$ for fluids with sp gr (specific gravity) = 0.86:

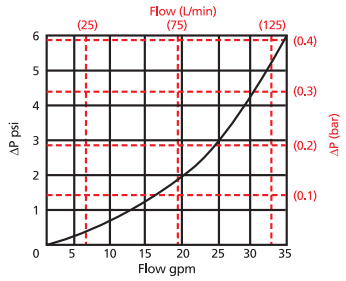

$\Delta P_{element}$

6GZ

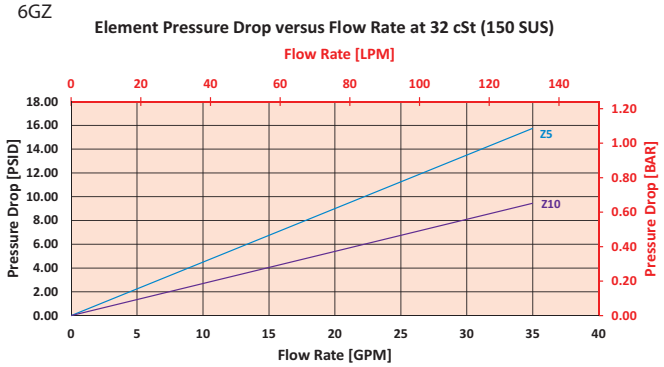

9GZ

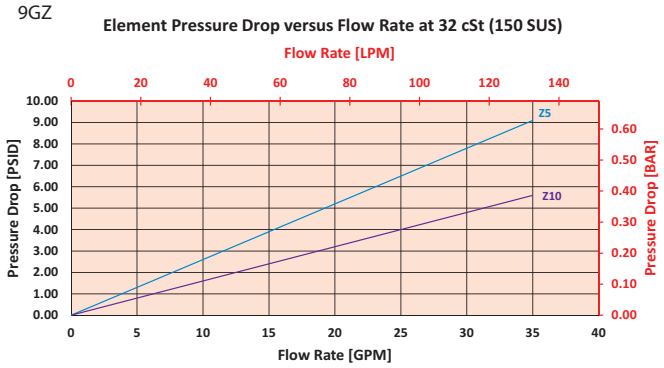

$$\Delta P_{filter} = \Delta P_{housing} + (\Delta P_{element} * V_f)$$

Exercise:

Determine ΔP_{filter} at 15 gpm (57 L/min) for GH6GZ10S12L using 160 SUS (34 cSt) fluid.

Use the housing pressure curve to determine $\Delta P_{housing}$ at 15 gpm. In this case, $\Delta P_{housing}$ is 1.5 psi (0.10 bar) on the graph for the GH housing.

Use the element pressure curve to determine $\Delta P_{element}$ at 15 gpm. In this case, $\Delta P_{element}$ is 4 psi (0.27 bar) according to the graph for the 6GZ10 element.

Because the viscosity in this sample is 160 SUS (34 cSt), we determine the Viscosity Factor (V_f) by dividing the Operating Fluid Viscosity with the Standard Viscosity of 150 SUS (32 cSt). To best determine your Operating Fluid Viscosity, please reference the chart in Appendix D.

Finally, the overall filter pressure differential, ΔP_{filter}, is calculated by adding $\Delta P_{housing}$ with the true element pressure differential, ($\Delta P_{element}$*V_f). The $\Delta P_{element}$ from the graph has to be multiplied by the viscosity factor to get the true pressure differential across the element.

Solution:

$\Delta P_{housing}$ = 1.5 psi [0.10 bar] | $\Delta P_{element}$ = 4 psi [0.27 bar]

V_f = 160 SUS (34 cSt) / 150 SUS (32 cSt) = 1.1

ΔP_{filter} = 1.5 psi + (4 psi * 1.1) = 5.9 psi

OR

ΔP_{filter} = 0.10 bar + (0.27 bar * 1.1) = 0.40 bar

Note:
If your element is not graphed, you can obtain your $\Delta P_{element}$ by multiplying the flow rate by the following: $\Delta P_{element}$ Factors x VP (Visc. Factor)

$\Delta P_{element}$ Factors @ 150 SUS (32 cSt)

Ele.	ΔP	Ele.	ΔP
6G3	0.60	9G3	0.35
6G10	0.40	9G10	0.24
6G25	0.08	9G25	0.05
6GH10	C/F	9GH10	C/F
6GZ3	0.60	9GZ3	0.35
6GZ25	C/F	9GZ25	C/F

Pressure Drop Information (GH11 & GH14)

Based on Flow Rate and Viscosity

$\Delta P_{housing}$

GH $\Delta P_{housing}$ for fluids with sp gr (specific gravity) = 0.86:

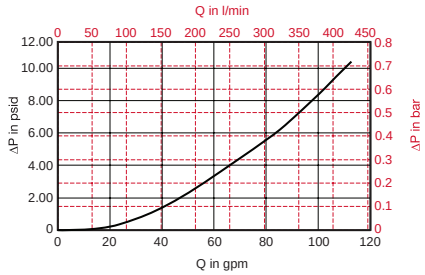

$\Delta P_{element}$

11GZ

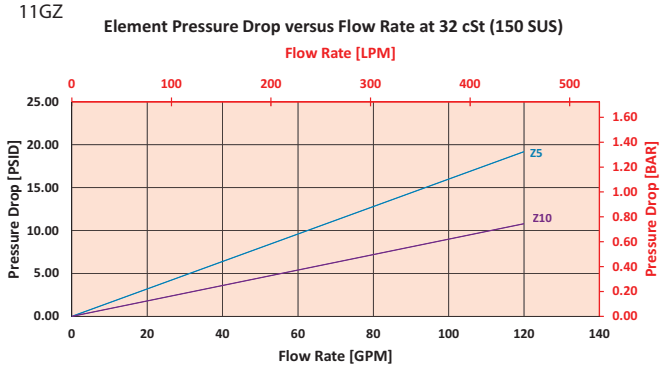

14GZ

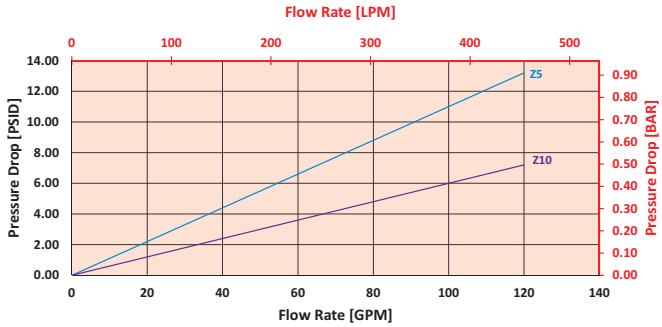

$$\Delta P_{filter} = \Delta P_{housing} + (\Delta P_{element} * V_f)$$

Exercise:

Determine ΔP_{filter} at 60 gpm (227.4 L/min) for GH11GZ10S24VA using 160 SUS (34 cSt) fluid.

Use the housing pressure curve to determine $\Delta P_{housing}$ at 60 gpm. In this case, $\Delta P_{housing}$ is 3 psi (0.21 bar) on the graph for the GH housing.

Use the element pressure curve to determine $\Delta P_{element}$ at 60 gpm. In this case, $\Delta P_{element}$ is 5 psi (0.34 bar) according to the graph for the 11GZ10 element.

Because the viscosity in this sample is 160 SUS (34 cSt), we determine the Viscosity Factor (V_f) by dividing the Operating Fluid Viscosity with the Standard Viscosity of 150 SUS (32 cSt). To best determine your Operating Fluid Viscosity, please reference the chart in Appendix D.

Finally, the overall filter pressure differential, ΔP_{filter}, is calculated by adding $\Delta P_{housing}$ with the true element pressure differential, ($\Delta P_{element}$*V_f). The $\Delta P_{element}$ from the graph has to be multiplied by the viscosity factor to get the true pressure differential across the element.

Solution:

$\Delta P_{housing}$ = 3 psi [0.21 bar] | $\Delta P_{element}$ = 5 psi [0.34 bar]

V_f = 160 SUS (34 cSt) / 150 SUS (32 cSt) = 1.1

ΔP_{filter} = 3 psi + (5 psi * 1.1) = 8.5 psi

OR

ΔP_{filter} = 0.21 bar + (0.34 bar * 1.1) = 0.58 bar

Note:
If your element is not graphed, you can obtain your $\Delta P_{element}$ by multiplying the flow rate by the following: $\Delta P_{element}$ Factors x VP (Visc. Factor)

$\Delta P_{element}$ Factors @ 150 SUS (32 cSt)

Ele.	ΔP
11GZ3	0.21
11GZ25	0.06
14GZ3	0.14
14GZ25	0.04

HydraSPIN Filter Series

Filter Model Number Selection (GH6 & GH9

Highlighted product eligible for QuickDelivery

How to Build a Valid Model Number for a Schroeder GH6/GH9:

BOX 1	BOX 2	BOX 3	BOX 4	BOX 5	BOX 6	BOX 7
GH						

Example: NOTE: One option per box

BOX 1	BOX 2	BOX 3	BOX 4	BOX 5	BOX 6	BOX 7	
GH	6	GZ10			S16	L	= GH6GZ10S16L

BOX 1 — Filter Series

Filter Series
GH

BOX 2 — Element Length (in)

Element Length (in)
6
9

BOX 3 — Element Part Number

G3	= 3 µ E media (cellulose)
G10	= 10 µ E media (cellulose)
G25	= 25 µ E media (cellulose)
GZ3	= 3 µ Excellement® Z-Media® (synthetic)
GZ5	= 5 µ Excellement® Z-Media® (synthetic)
GZ10	= 10 µ Excellement® Z-Media® (synthetic)
GZ25	= 25 µ Excellement® Z-Media® (synthetic)
GH10	= 10 µ Excellement® Hydraspin media

BOX 4 — Bypass Setting

Omit	= 25 psid
50	= 50 psid
N	= Non-bypassing

BOX 5 — Element Seal Material

Element Seal Material
Omit = Buna N

BOX 6 — Inlet Port

S12 =	SAE-12
S16 =	SAE-16
B12 =	ISO 228 G-¾"
B16 =	ISO 228 G-1"

BOX 7 — Dirt Alarm® Options

	Omit =	None
Visual	L =	Bar indicator, left side std
	R =	Bar indicator, right side std
	B =	Bar indicators, left and right side
	VA =	Visual pop-up w/auto reset
	VM =	Visual pop-up w/manual reset
Electrical	Omit =	None
	M =	Drilled, tapped, plugged
	DTC =	DC 2 wire, normally closed (NC)
	DTO =	DC 2 wire, normally open (NO)
	DW =	AC/DC 3-wire (NO or NC)

Indicator Location Option L

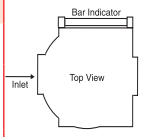

Filter Model Number Selection (GH11 & GH14)

How to Build a Valid Model Number for a Schroeder GH11/GH14:

BOX 1	BOX 2	BOX 3	BOX 4	BOX 5	BOX 6	BOX 7
GH						

Example: NOTE: One option per box

BOX 1	BOX 2	BOX 3	BOX 4	BOX 5	BOX 6	BOX 7	
GH	11	GZ10	87		S24	VA	= GH11GZ1087S24VA

BOX 1 — Filter Series

Filter Series
GH

BOX 2 — Element Length (in)

Element Length (in)
11
14

BOX 3 — Element Part Number

GZ3	= 3 µ Excellement® Z-Media® (synthetic)
GZ5	= 5 µ Excellement® Z-Media® (synthetic)
GZ10	= 10 µ Excellement® Z-Media® (synthetic)
GZ25	= 25 µ Excellement® Z-Media® (synthetic)

BOX 4 — Bypass Setting

Omit	= 47 psid
87	= 87 psid
N	= Non-bypassing

BOX 5 — Element Seal Material

Element Seal Material
Omit = Buna N
V = Viton

BOX 6 — Inlet Port

Inlet Port
B24 = ISO 228 G-1½"
S24 = SAE 24 Straight Thread Ports

BOX 7 — Dirt Alarm® Options

	Omit = None
Visual	VA = Visual pop-up w/auto reset
	VM = Visual pop-up w/manual reset
	VF = Visual analog
Electrical	EC = Electrical switch - SPDT
	ED = Electrical switch and LED light - SPDT

NOTES:

Box 2. Replacement element part numbers are a combination of Boxes 2, 3 and 4. Replacement elements contain bypass. For 50 psid setting or non-bypassing version, element part number includes suffix. Examples: 11GZ1050, 14GZ10N.

Box 7. VA and VM indicators are available with 50 psid bypass element only.

Model No. of filter in photograph is RLT9VZ10P20D5.

Features and Benefits

- Durable, compact design
- Quick and easy cartridge element changeouts
- Available in 9" and 14" element lengths
- Lightweight at 8 pounds
- Offered in pipe, SAE straight thread, flange and ISO 228 porting
- Available with NPTF inlet and outlet female test ports
- Various Dirt Alarm® options
- Same day shipment model available

70 gpm
265 L/min
1400 psi
97 bar

Filter Housing Specifications

Flow Rating:	Up to 70 gpm (265 L/min) for 150 SUS (32 cSt) fluids for P20, S20, & B20 porting Up to 50 gpm (190 L/min) for 150 SUS (32 cSt) fluids for P16, S16, F16, F20 & B16 porting
Max. Operating Pressure:	1400 psi (97 bar)
Min. Yield Pressure:	4200 psi (290 bar) , per NFPA T2.6.1
Rated Fatigue Pressure:	415 psi (29 bar), per NFPA T2.6.1-R1-2005
Temp. Range:	-20°F to 225°F (-29°C to 107°C)
Bypass Setting:	Cracking: 40 psi (2.8 bar) for all porting Full Flow: 57 psi (3.9 bar) for P20 & S20 porting Full Flow: 75 psi (5.2 bar) for P16, S16, F16 & F20 porting
Porting Head:	Aluminum
Element Case:	Aluminum
Weight of RLT-9V:	6.7 lbs. (3.0 kg)
Weight of RLT-14V:	8.0 lbs. (3.6 kg)
Element Change Clearance:	9V & 14V: 2.75" (70 mm)

Fluid Compatibility

Type Fluid	Appropriate Schroeder Media
Petroleum Based Fluids	All E media (cellulose) and Z-Media® (synthetic)
High Water Content	All Z-Media® (synthetic)
Invert Emulsions	10 and 25 µ Z-Media® (synthetic)
Water Glycols	3, 5, 10 and 25 µ Z-Media® (synthetic)
Phosphate Esters	All Z-Media® (synthetic) with H (EPR) seal designation
Skydrol®	3, 5, 10 and 25 µ Z-Media® (synthetic) with H.5 seal designation (EPR seals and stainless steel wire mesh in element, and light oil coating on housing exterior)

Medium Pressure Filter

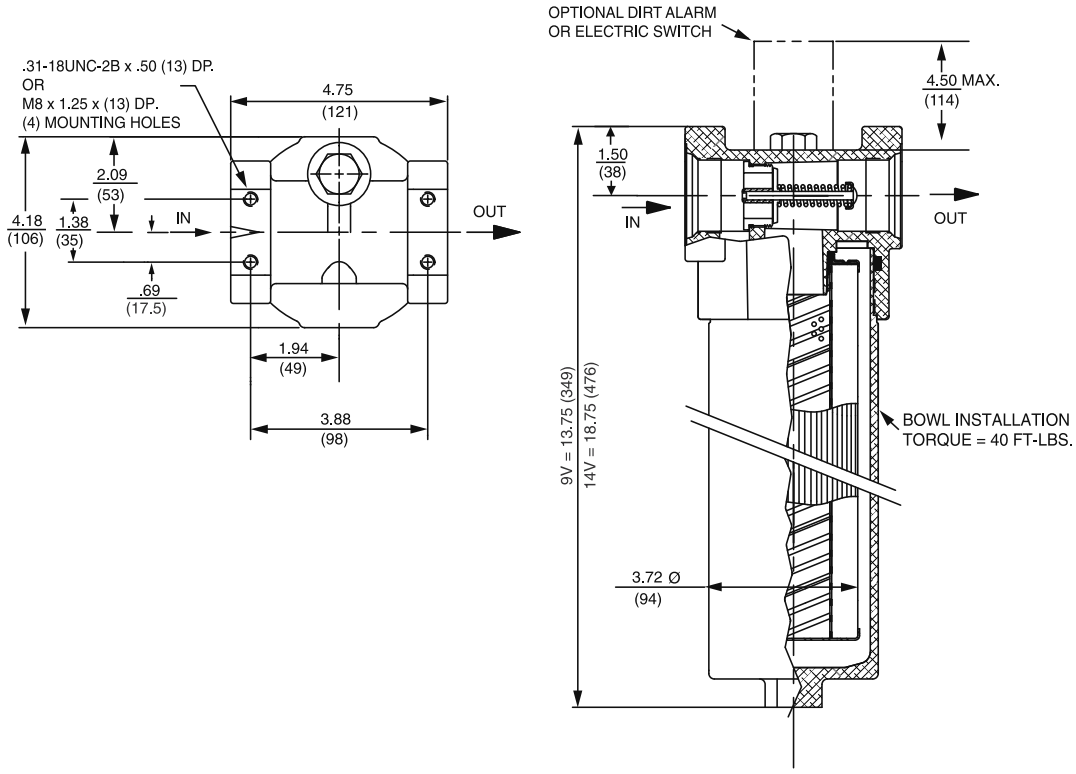

Metric dimensions in ( ).
Dimensions shown are inches (millimeters) for general information and overall envelope size only.
For complete dimensions please contact Schroeder Industries to request a certified print.

Element Performance Information & Dirt Holding Capacity

	Filtration Ratio Per ISO 4572/NFPA T3.10.8.8 Using automated particle counter (APC) calibrated per ISO 4402			Filtration Ratio per ISO 16889 Using APC calibrated per ISO 11171	
Element	$ß_x \geq 75$	$ß_x \geq 100$	$ß_x \geq 200$	$ß_x(c) \geq 200$	$ß_x(c) \geq 1000$
9VZ1/14VZ1	<1.0	<1.0	<1.0	<4.0	4.2
9VZ3/14VZ3	<1.0	<1.0	<2.0	<4.0	4.8
9VZ5/14VZ5	2.5	3.0	4.0	4.8	6.3
9VZ10/14VZ10	7.4	8.2	10.0	8.0	10.0
9VZ25/14VZ25	18.0	20.0	22.5	19.0	24.0

Element	DHC (gm)	Element	DHC (gm)
9VZ1	55	14VZ1	102
9VZ3	57	14VZ3	105
9VZ5	62	14VZ5	115
9VZ10	52	14VZ10	104
9VZ25	48	14VZ25	94

Element Collapse Rating: 150 psid (10 bar)
500 psid (34.5 bar) for hydrostatic high collapse (9V5Z and 14V5Z) version

Flow Direction: Outside In

Element Nominal Dimensions: 9V: 3.0" (75 mm) O.D. x 9.5" (240 mm) long
14V: 3.0" (75 mm) O.D. x 14.5" (370 mm) long

Pressure Drop Information

Based on Flow Rate and Viscosity

$\Delta P_{housing}$

RLT $\Delta P_{housing}$ for fluids with sp gr (specific gravity) = 0.86:

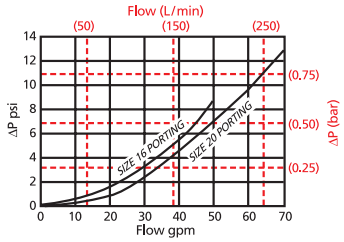

$\Delta P_{element}$

9VZ

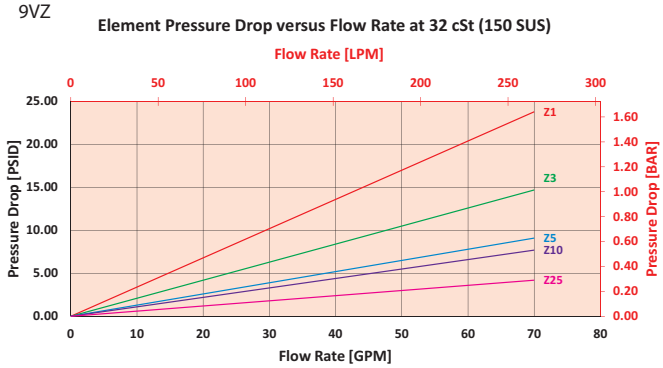

14VZ

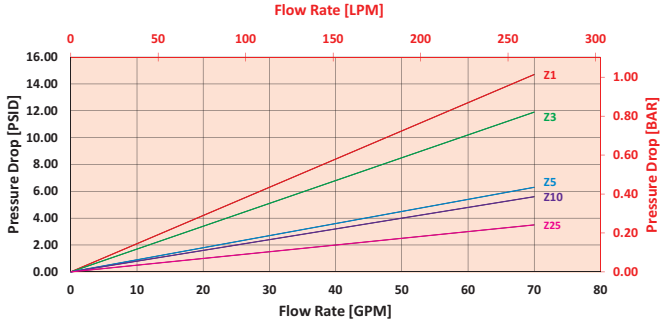

$$\Delta P_{filter} = \Delta P_{housing} + (\Delta P_{element} * V_f)$$

Exercise:

Determine ΔP_{filter} at 40 gpm (151.6 L/min) for RLT9VZ10S20D5 using 175 SUS (37.2 cSt) fluid.

Use the housing pressure curve to determine $\Delta P_{housing}$ at 40 gpm. In this case, $\Delta P_{housing}$ is 4.5 psi (.31 bar) on the graph for the RLT housing.

Use the element pressure curve to determine $\Delta P_{element}$ at 40 gpm. In this case, $\Delta P_{element}$ is 6 psi (.415 bar) according to the graph for the 9VZ10 element.

Because the viscosity in this sample is 175 SUS (37.2 cSt), we determine the Viscosity Factor (V_f) by dividing the Operating Fluid Viscosity with the Standard Viscosity of 150 SUS (32 cSt). To best determine your Operating Fluid Viscosity, please reference the chart in Appendix D.

Finally, the overall filter pressure differential, ΔP_{filter}, is calculated by adding $\Delta P_{housing}$ with the true element pressure differential, ($\Delta P_{element}$*V_f). The $\Delta P_{element}$ from the graph has to be multiplied by the viscosity factor to get the true pressure differential across the element.

Solution:

$\Delta P_{housing}$ = 4.5 psi [.31 bar] | $\Delta P_{element}$ = 4 psi [.27 bar]

V_f = 175 SUS (37.2 cSt) / 150 SUS (32 cSt) = 1.2

ΔP_{filter} = 4.5 psi + (4 psi * 1.2) = 9.3 psi

OR

ΔP_{filter} = .31 bar + (.27 bar * 1.2) = .63 bar

Note:
If your element is not graphed, use the following equation:
$\Delta P_{element}$ = Flow Rate x ΔP_f. Plug this variable into the overall pressure drop equation.

Ele.	ΔP	Ele.	ΔP
9V3	0.32	14V3	0.19
9V10	0.24	14V10	0.15

RLT Medium Pressure Filter

Filter Model Number Selection

Highlighted product eligible for QuickDelivery

How to Build a Valid Model Number for a Schroeder RLT:

BOX 1	BOX 2	BOX 3	BOX 4	BOX 5	BOX 6	BOX 7	BOX 8
RLT –	–	–	–	–	–	–	

Example: NOTE: One option per box

BOX 1	BOX 2	BOX 3	BOX 4	BOX 5	BOX 6	BOX 7	BOX 8	
RLT –	9 –	VZ10 –	–	S20 –	–	D5		= RLT9VZ10S20D5

BOX 1 — Filter Series

RLT
RLTN (Non-bypassing: requires V5Z high collapse elements)
WRLT (Water)

BOX 2 — Element Length (in)

9
14

BOX 3 — Element Size and Media

VZ1	= V size 1 µ Excellement® Z-Media® (synthetic)
VZ3	= V size 3 µ Excellement® Z-Media® (synthetic)
VZ5	= V size 5 µ Excellement® Z-Media® (synthetic)
VZ10	= V size 10 µ Excellement® Z-Media® (synthetic)
VZ25	= V size 25 µ Excellement® Z-Media® (synthetic)
VW	= V size W media (water removal)
V5Z3	= V size 3 µ Excellement® media, 500 psid collapse
V5Z5	= V size 5 µ Excellement® media, 500 psid collapse
V5Z10	= V size 10 µ Excellement® media, 500 psid collapse
V5Z25	= V size 25 µ Excellement® media, 500 psid collapse
Water Service Element Options	
VM60	= V size 60 µ M media (reusable metal)
VM150	= V size 150 µ M media (reusable metal)
VM260	= V size 260 µ M media (reusable metal)

BOX 4 — Seal Material

Omit = Buna N
H = EPR
V = Viton®
H.5 = Skydrol® Compatibility

BOX 5 — Porting Options

P16	= 1" NPTF
P20	= 1¼" NPTF
S16	= SAE-16
S20	= SAE-20
F20	= 1¼" SAE 4-bolt flange Code 61
B16	= ISO 228 G-1"
B20	= ISO 228 G-1¼"

BOX 6 — Bypass

Omit	= 40 PSI Bypass
50	= 50 PSI Bypass
60	= 60 PSI Bypass
X	= Blocked Bypass

(Omit box 6 if a RLTN is selected)

BOX 7 — Dirt Alarm® Options

None	Omit	= None
Visual	D5	= Visual pop-up
	D8	= Visual w/ thermal lockout
Electrical	MS5	= Electrical w/ 12 in. 18 gauge 4-conductor cable
	MS5LC	= Low current MS5
	MS10	= Electrical w/ DIN connector (male end only)
	MS10LC	= Low current MS10
	MS11	= Electrical w/ 12 ft. 4-conductor wire
	MS12	= Electrical w/ 5 pin Brad Harrison connector (male end only)
	MS12LC	= Low current MS12
	MS16	= Electrical w/ weather-packed sealed connector
	MS16LC	= Low current MS16
	MS17LC	= Electrical w/ 4 pin Brad Harrison male connector
Electrical with Thermal Lockout	MS5T	= MS5 (see above) w/ thermal lockout
	MS5LCT	= Low current MS5T
	MS10T	= MS10 (see above) w/ thermal lockout
	MS10LCT	= Low current MS10T
	MS12T	= MS12 (see above) w/ thermal lockout
	MS12LCT	= Low current MS12T
	MS16T	= MS16 (see above) w/ thermal lockout
	MS16LCT	= Low current MS16T
	MS17LCT	= Low current MS17T
Electrical Visual	MS13	= Supplied w/ threaded connector & light
	MS14	= Supplied w/ 5 pin Brad Harrison connector & light (male end)
Electrical Visual with Thermal Lockout	MS13DCT	= MS13 (see above), direct current, w/ thermal lockout
	MS13DCLCT	= Low current MS13DCT
	MS14DCT	= MS14 (see above), direct current, w/ thermal lockout
	MS14DCLCT	= Low current MS14DCT

BOX 8 — Additional Options

Omit = None
L = Two ¼" NPTF inlet and outlet female test ports

NOTES:

Box 2. Replacement element part numbers are a combination of Boxes 2, 3, and 4. Example: 9VZ10V

Box 3. E media elements are only available with Buna N seals. V5Z10 and V5Z25 are only available with RLTN 9".

Box 4. For options H, V, and H.5, all aluminum parts are anodized. H.5 seal designation includes the following: EPR seals, stainless steel wire mesh on elements, and light oil coating on housing exterior. Viton® is a registered trademark of DuPont Dow Elastomers. Skydrol® is a registered trademark of Solutia Inc.

Box 5. B porting supplied with metric mounting holes.

Box 6. When X is paired with a standard filter series, a standard bushing and spring plate will be used.

Medium Pressure Filter KF5

Model No. of filter in photograph is KF51KZ10SD5.

Features and Benefits

- Meets HF4 automotive standard
- Offered in pipe, SAE straight thread, flange and ISO 228 porting
- Available with NPTF inlet and outlet female test ports
- KFN5 non-bypass version with high collapse elements also available
- Various Dirt Alarm® options
- Allows consolidation of inventoried replacement elements by using K-size elements
- Also available with DirtCatcher® elements (KD & KKD)
- G Available with quality-protected GeoSeal® Elements (GKF5)

100 gpm
380 L/min
500 psi
35 bar

Filter Housing Specifications

Flow Rating:	Up to 100 gpm (380 L/min) for 150 SUS (32 cSt) fluids
Max. Operating Pressure:	500 psi (35 bar)
Min. Yield Pressure:	1500 psi (100 bar) , per NFPA T2.6.1
Rated Fatigue Pressure:	300 psi (35 bar), per NFPA T2.6.1-2005
Temp. Range:	-20°F to 225°F (-29°C to 107°C)
Bypass Setting:	Cracking: 40 psi (2.8 bar) Full Flow: 61 psi (4.2 bar)
Porting Head:	Grey Cast Iron
Element Case:	Steel
Weight of KF5-1K:	23.2 lbs. (10.5 kg)
Element Change Clearance:	2.0" (51 mm)

Fluid Compatibility

Type Fluid	Appropriate Schroeder Media
Petroleum Based Fluids	All E media (cellulose), Z-Media® and ASP® media (synthetic)
High Water Content	All Z-Media® (synthetic), 3, 5 and 10 µ ASP® media (synthetic)
Invert Emulsions	10 and 25 µ Z-Media® (synthetic), 10 µ ASP® media (synthetic)
Water Glycols	3, 5, 10 and 25 µ Z-Media® (synthetic), 3, 5 and 10 µ ASP® media (synthetic)
Phosphate Esters	All Z-Media® (synthetic) with H (EPR) seal designation and 3 and 10 µ E media (cellulose) with H (EPR) seal designation, 3, 5 and 10 µ ASP® media (synthetic)
Skydrol®	3, 5, 10 and 25 µ Z-Media® (synthetic) with H.5 seal designation (EPR seals & stainless steel wire mesh in element, and light oil coating on housing exterior), 3, 5 and 10 µ ASP® media (synthetic)

Medium Pressure Filter

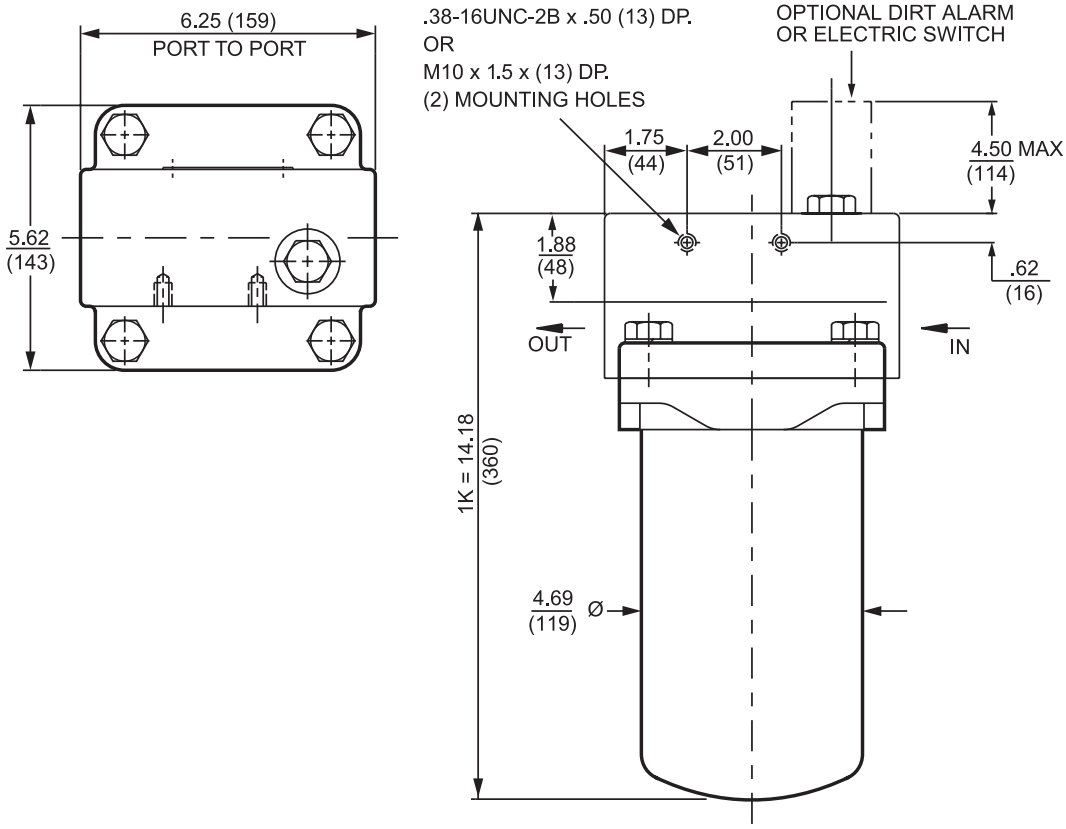

Metric dimensions in ( ).
Dimensions shown are inches (millimeters) for general information and overall envelope size only.
For complete dimensions please contact Schroeder Industries to request a certified print.

Element Performance Information & Dirt Holding Capacity

	Filtration Ratio Per ISO 4572/NFPA T3.10.8.8 Using automated particle counter (APC) calibrated per ISO 4402			Filtration Ratio per ISO 16889 Using APC calibrated per ISO 11171	
Element	$ß_x \geq 75$	$ß_x \geq 100$	$ß_x \geq 200$	$ß_x(c) \geq 200$	$ß_x(c) \geq 1000$
KZ1	<1.0	<1.0	<1.0	<4.0	4.2
KZ3	<1.0	<1.0	<2.0	<4.0	4.8
KZ5	2.5	3.0	4.0	4.8	6.3
KZ10	7.4	8.2	10.0	8.0	10.0
KZ25	18.0	20.0	22.5	19.0	24.0
KZW1	N/A	N/A	N/A	<4.0	<4.0
KZW3	N/A	N/A	N/A	4.0	4.8
KZW5	N/A	N/A	N/A	5.1	6.4
KZW10	N/A	N/A	N/A	6.9	8.6
KZW25	N/A	N/A	N/A	15.4	18.5

Element	DHC (gm)	Element	DHC (gm)	Element	DHC (gm)
KZ1	112	KZW1	61	KDZ1	89
KZ3/KAS3	115	KZW3	64	KDZ3	71
KZ5/KAS5	119	KZW5	63	KDZ5	100
KZ10/KAS10	108	KZW10	67	KDZ10	80
KZ25	93	KZW25	79	KDZ25	81

Element Collapse Rating: 150 psid (10 bar) for standard elements
Flow Direction: Outside In
Element Nominal Dimensions: 3.9" (99 mm) O.D. x 9.0" (230 mm) long

Pressure Drop Information

Based on Flow Rate and Viscosity

$\Delta P_{housing}$

KF5 $\Delta P_{housing}$ for fluids with sp gr (specific gravity) = 0.86:

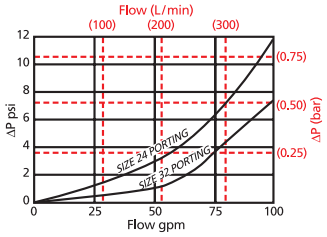

$\Delta P_{element}$

KZ

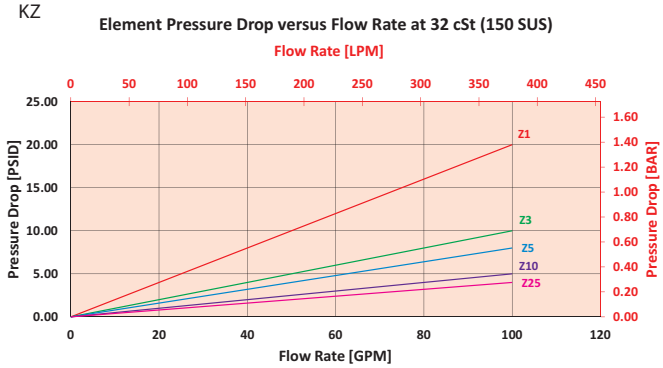

$$\Delta P_{filter} = \Delta P_{housing} + (\Delta P_{element} * V_f)$$

Exercise:

Determine ΔP_{filter} at 50 gpm (189.5 L/min) for KF51KZ10S24D5 using 200 SUS (42.6 cSt) fluid.

Use the housing pressure curve to determine $\Delta P_{housing}$ at 50 gpm. In this case, $\Delta P_{housing}$ is 3 psi (.21 bar) on the graph for the KF5 housing.

Use the element pressure curve to determine $\Delta P_{element}$ at 50 gpm. In this case, $\Delta P_{element}$ is 2 psi (.14 bar) according to the graph for the KZ10 element.

Because the viscosity in this sample is 200 SUS (42.6 cSt), we determine the Viscosity Factor (V_f) by dividing the Operating Fluid Viscosity with the Standard Viscosity of 150 SUS (32 cSt). To best determine your Operating Fluid Viscosity, please reference the chart in Appendix D.

Finally, the overall filter pressure differential, ΔP_{filter}, is calculated by adding $\Delta P_{housing}$ with the true element pressure differential, ($\Delta P_{element}$*V_f). The $\Delta P_{element}$ from the graph has to be multiplied by the viscosity factor to get the true pressure differential across the element.

Solution:

$\Delta P_{housing}$ = 3 psi [.21 bar] | $\Delta P_{element}$ = 2 psi [.14 bar]

V_f = 200 SUS (42.6 cSt) / 150 SUS (32 cSt) = 1.3

ΔP_{filter} = 3 psi + (2 psi * 1.3) = 5.6 psi

OR

ΔP_{filter} = .21 bar + (.14 bar * 1.3) = .40 bar

Note:
If your element is not graphed, use the following equation:
$\Delta P_{element}$ = Flow Rate x ΔP_f. Plug this variable into the overall pressure drop equation.

Ele.	ΔP
K3	0.25
K10	0.09
K25	0.02
KAS3	0.10
KAS5	0.08
KAS10	0.05
KDZ1	0.24
KDZ3	0.12
KDZ5	0.10
KDZ10	0.06
KDZ25	0.04
KZW1	0.43
KZW3	0.32
KZW5	0.28
KZW10	0.23
KZW25	0.14

Medium Pressure Filter

Filter Model Number Selection

How to Build a Valid Model Number for a Schroeder KF5:

BOX 1	BOX 2	BOX 3	BOX 4	BOX 5	BOX 6	BOX 7	BOX 8	BOX 9	BOX 10
KF5 –	–	–	–	–	–	–	–	–	–

Example: NOTE: One option per box

BOX 1	BOX 2	BOX 3	BOX 4	BOX 5	BOX 6	BOX 7	BOX 8	BOX 9	BOX 10	
KF5 –	1K –	Z –	10 –	–	–	P32 –	–	–	D5	= KF51KZ10P32D5

BOX 1 — Filter Series

- KF5
- KFN5 (Non-bypass: req. ZX/MXX hi-collapse elements)
- WKF5 (Water)
- WKFN5 (Water)
- GKF5 (GeoSeal)

BOX 2 — Number & Size of Elements

1 K

GeoSeal® Options

1 KG

BOX 3 — Media Type

- Omit = E media (Cellulose)
- AS = Anti-Static Pleated media
- Z = Excellement® Z-Media® (Synthetic)
- ZW = Aqua-Excellement® ZW media
- ZX = Excellement® Z-Media® (High Collapse Centertube)
- W = Water Removal media
- M = M media (Reusable Metal)
- MXX = M media (reusable metal mesh; high collapse centertube)
- DZ = DirtCatcher® Excellement® Z-Media®

BOX 4 — Micron Rating

- 1 = 1 µ (Z, ZW, ZX and DZ media)
- 3 = 3 µ (E, AS, Z, ZW, ZX and DZ media)
- 5 = 5 µ (AS, Z, ZW, ZX and DZ media)
- 10 = 10 µ (E, AS, Z, ZW,ZX, M and DZ media)
- 25 = 25 µ (E, Z, ZW, ZX, M, MXX and DZ media)
- 60 = 60 µ (M media)

BOX 5 — Seal Material

- Omit = Buna N
- H = EPR
- V = Viton®
- H.5 = Skydrol® Compatibility

BOX 6 — Magnetic Option

- Omit = None
- M = Magnet Inserts

BOX 7 — Porting Options

- P24 = 1½" NPTF
- P32 = 2" NPTF
- S24 = SAE-24
- S32 = SAE-32
- F24 = 1½" SAE split 4-bolt flange Code 61
- B24 = ISO 228 G-1½"

BOX 8 — Bypass

- Omit = 40 PSI Bypass
- 50 = 50 PSI Bypass

(Omit Box 8 if a Non-bypassing filter is used)

BOX 9 — Test Port Options

- Omit = None
- L = Two ¼" NPTF inlet and outlet female test ports

BOX 10 — Dirt Alarm® Options

	Omit = None
Visual	D = Pointer D5 = Visual pop-up
Visual with Thermal Lockout	D8 = Visual w/ thermal lockout
Electrical	MS5 = Electrical w/ 12 in. 18 gauge 4-conductor cable MS5LC = Low current MS5 MS10 = Electrical w/ DIN connector (male end only) MS10LC = Low current MS10 MS11 = Electrical w/ 12 ft. 4-conductor wire MS12 = Electrical w/ 5 pin Brad Harrison connector (male end only) MS12LC = Low current MS12 MS16 = Electrical w/ weather-packed sealed connector MS16LC = Low current MS16 MS17LC = Electrical w/ 4 pin Brad Harrison male connector
Electrical with Thermal Lockout	MS5T = MS5 (see above) w/ thermal lockout MS5LCT = Low current MS5T MS10T = MS10 (see above) w/ thermal lockout MS10LCT = Low current MS10T MS12T = MS12 (see above) w/ thermal lockout MS12LCT = Low current MS12T MS16T = MS16 (see above) w/ thermal lockout MS16LCT = Low current MS16T MS17LCT = Low current MS17T
Electrical Visual	MS = Cam operated switch w/ ½" conduit female connection MS13 = Supplied w/ threaded connector & light MS14 = Supplied w/ 5 pin Brad Harrison connector & light (male end)
Electrical Visual with Thermal Lockout	MS13DCT = MS13 (see above), direct current, w/ thermal lockout MS13DCLCT = Low current MS13DCT MS14DCT = MS14 (see above), direct current, w/ thermal lockout MS14DCLCT = Low current MS14DCT

NOTES:

Box 2. Replacement element part numbers are a combination of Boxes 2, 3, 4 and 5. Example: KZ10V
High collapse media only available with KFN5.

Box 5. For options H, V, and H.5, all aluminum parts are anodized.
H.5 seal designation includes the following: EPR seals, stainless steel wire mesh on elements, and light oil coating on housing exterior.
Viton® is a registered trademark of DuPont Dow Elastomers.
Skydrol® is a registered trademark of Solutia Inc.

Box 7. B porting supplied with metric mounting holes.

Medium Pressure Filter SRLT

Model No. of filter in photograph is SRLT6RZ10S12D5.

Features and Benefits

- Smaller, compact version of the RLT
- Quick and easy cartridge element changeouts
- Lightweight at 3 pounds
- Offered in pipe, SAE straight thread and ISO 228 porting
- Available with NPTF inlet and outlet female test ports
- Various Dirt Alarm® options
- Same day shipment model available

25 gpm
100 L/min
1400 psi
100 bar

Filter Housing Specifications

Flow Rating:	Up to 25 gpm (100 L/min) for 150 SUS (32 cSt) fluids
Max. Operating Pressure:	1400 psi (100 bar)
Min. Yield Pressure:	4000 psi (276 bar), per NFPA T2.6.1
Rated Fatigue Pressure:	750 psi (52 bar) per NFPA T2.6.1-R1-2005
Temp. Range:	-20°F to 225°F (-29°C to 107°C)
Bypass Setting:	Cracking: 40 psi (2.8 bar) Full Flow: 55 psi (3.8 bar)
Porting Head:	Aluminum
Element Case:	Aluminum
Weight of SRLT-6R: Weight of SRLT-12R:	3.0 lbs. (1.4 kg) 4.5 lbs. (2 kg)
Element Change Clearance:	2.75" (70 mm)

Fluid Compatibility

Type Fluid	Appropriate Schroeder Media
Petroleum Based Fluids	All E media (cellulose) and Z-Media® (synthetic)
High Water Content	All Z-Media® (synthetic)
Invert Emulsions	10 and 25 µ Z-Media® (synthetic)
Water Glycols	3, 5, 10 and 25 µ Z-Media® (synthetic)
Phosphate Esters	All Z-Media® (synthetic) with H (EPR) seal designation
Skydrol®	3, 5, 10 and 25 µ Z-Media® (synthetic) with H.5 seal designation (EPR seals and stainless steel wire mesh in element, and light oil coating on housing exterior)

Medium Pressure Filter

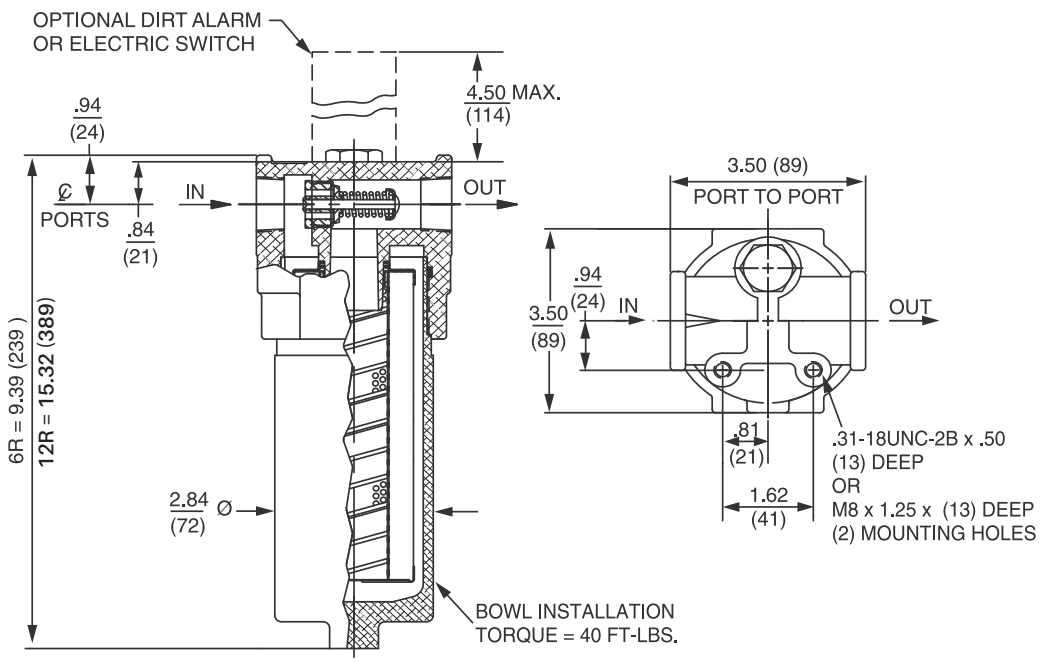

Metric dimensions in ( ).
Dimensions shown are inches (millimeters) for general information and overall envelope size only.
For complete dimensions please contact Schroeder Industries to request a certified print.

Element Performance Information & Dirt Holding Capacity

	Filtration Ratio Per ISO 4572/NFPA T3.10.8.8 Using automated particle counter (APC) calibrated per ISO 4402			Filtration Ratio per ISO 16889 Using APC calibrated per ISO 11171	
Element	$ß_x \geq 75$	$ß_x \geq 100$	$ß_x \geq 200$	$ß_x(c) \geq 200$	$ß_x(c) \geq 1000$
6RZ1	<1.0	<1.0	<1.0	<4.0	4.2
6RZ3	<1.0	<1.0	<2.0	<4.0	4.8
6RZ5	2.5	3.0	4.0	4.8	6.3
6RZ10	7.4	8.2	10.0	8.0	10.0
6RZ25	18.0	20.0	22.5	19.0	24.0

Element	DHC (gm)	Element	DHC (gm)
6RZ1	15	12RZ1	30
6RZ3	15	12RZ3	30
6RZ5	17	12RZ5	34
6RZ10	14	12RZ10	28
6RZ25	25	12RZ25	50

Element Collapse Rating: 150 psid (10 bar)
Flow Direction: Outside In
Element Nominal Dimensions: 2.0" (50 mm) O.D. x 6.0" (150 mm) long

Pressure Drop Information

Based on Flow Rate and Viscosity

$\Delta P_{housing}$

SRLT $\Delta P_{housing}$ for fluids with sp gr (specific gravity) = 0.86:

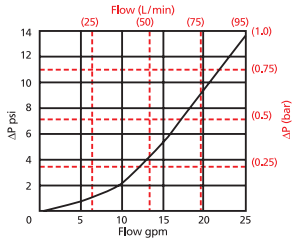

$\Delta P_{element}$

6RZ

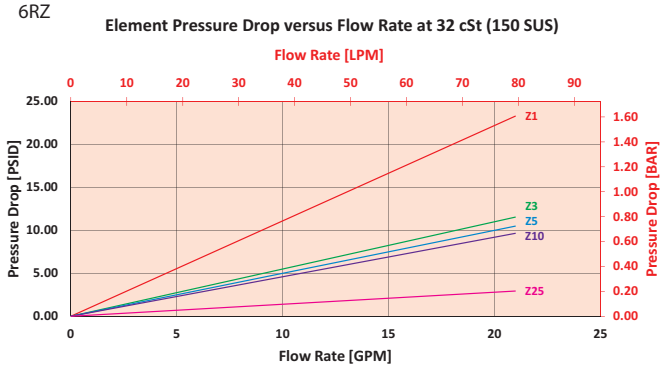

12RZ

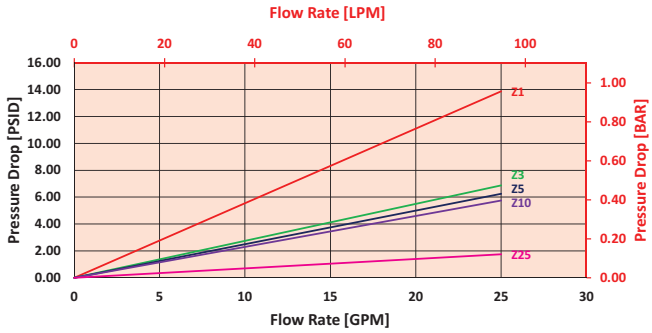

$$\Delta P_{filter} = \Delta P_{housing} + (\Delta P_{element} * V_f)$$

Exercise:

Determine ΔP_{filter} at 15 gpm (57 L/min) for SRLT6RZ10S12D5 using 100 SUS (21.3 cSt) fluid.

Use the housing pressure curve to determine $\Delta P_{housing}$ at 15 gpm. In this case, $\Delta P_{housing}$ is 5 psi (.34 bar) on the graph for the SRLT housing.

Use the element pressure curve to determine $\Delta P_{element}$ at 15 gpm. In this case, $\Delta P_{element}$ is 7 psi (.48 bar) according to the graph for the 6RZ10 element.

Because the viscosity in this sample is 100 SUS (21.3 cSt), we determine the Viscosity Factor (V_f) by dividing the Operating Fluid Viscosity with the Standard Viscosity of 150 SUS (32 cSt). To best determine your Operating Fluid Viscosity, please reference the chart in Appendix D.

Finally, the overall filter pressure differential, ΔP_{filter}, is calculated by adding $\Delta P_{housing}$ with the true element pressure differential, ($\Delta P_{element}$*V_f). The $\Delta P_{element}$ from the graph has to be multiplied by the viscosity factor to get the true pressure differential across the element.

Solution:

$\Delta P_{housing}$ = 5 psi [.34 bar] | $\Delta P_{element}$ = 7 psi [.48 bar]

V_f = 100 SUS (21.3 cSt) / 150 SUS (32 cSt) = .67

ΔP_{filter} = 5 psi + (7 psi * .67) = 9.7 psi

OR

ΔP_{filter} = .34 bar + (.48 bar * .67) = .66 bar

Note:
If your element is not graphed, use the following equation:
$\Delta P_{element}$ = Flow Rate x ΔP_f. Plug this variable into the overall pressure drop equation.

Ele.	ΔP
6R3	0.45
6R10	0.38

SRLT Medium Pressure Filter

Filter Model Number Selection

Highlighted product eligible for QuickDelivery

How to Build a Valid Model Number for a Schroeder SRLT:

BOX 1		BOX 2		BOX 3		BOX 4		BOX 5		BOX 6		BOX 7		BOX 8
SRLT	–		–		–		–		–		–		–	

Example: NOTE: One option per box

BOX 1		BOX 2		BOX 3		BOX 4		BOX 5		BOX 6		BOX 7		BOX 8	
SRLT	–	6	–	RZ10	–		–	S12	–		–		–	D5	= SRLT6RZ10S12D5

BOX 1

Filter Series
SRLT (requires RZ elements only)
SRLTN (Non-bypassing requires R5Z elements only)

BOX 2

Length of Element (in)
6
12

BOX 3

Element Size and Media
RZ1 = R size 1 µ Excellement® Z-Media® (synthetic)
RZ3 = R size 3 µ Excellement® Z-Media® (synthetic)
RZ5 = R size 5 µ Excellement® Z-Media® (synthetic)
RZ10 = R size 10 µ Excellement® Z-Media® (synthetic)
RZ25 = R size 25 µ Excellement® Z-Media® (synthetic)
RW = R size W media (water removal)
R5Z1 = R size 1 µ Excellement® Z-Media® 500 psid collapse
R5Z3 = R size 3 µ Excellement® Z-Media® 500 psid collapse
R5Z5 = R size 5 µ Excellement® Z-Media® 500 psid collapse
R5Z10 = R size 10 µ Excellement® Z-Media® 500 psid collapse
R5Z25 = R size 25 µ Excellement® Z-Media® 500 psid collapse

BOX 4

Seal Material
Omit = Buna N
H = EPR
V = Viton®
H.5 = Skydrol® Compatibility

BOX 5

Porting
P12= ¾" NPTF
S12= SAE-12
B12 = ISO 228 G-¾"

BOX 6

Bypass
Omit = 40 psi bypass setting
30 = 30 psi bypass setting
50 = 50 psi bypass setting
60 = 60 psi bypass setting

BOX 7

Test Points
Omit = None
L = Two ⅛" NPTF inlet and outlet female test ports

BOX 8

Dirt Alarm® Options		
	Omit	= None
Visual	D5	= Visual pop-up
Visual with Thermal Lockout	D8	= Visual w/ thermal lockout
Electrical	MS5	= Electrical w/ 12 in. 18 gauge 4-conductor cable
	MS5LC	= Low current MS5
	MS10	= Electrical w/ DIN connector (male end only)
	MS10LC	= Low current MS10
	MS11	= Electrical w/ 12 ft. 4-conductor wire
	MS12	= Electrical w/ 5 pin Brad Harrison connector (male end only)
	MS12LC	= Low current MS12
	MS16	= Electrical w/ weather packed sealed connector
	MS16LC	= Low current MS16
	MS17LC	= Electrical w/ 4 pin Brad Harrison male connector
Electrical with Thermal Lockout	MS5T	= MS5 (see above) w/ thermal lockout
	MS5LCT	= Low current MS5T
	MS10T	= MS10 (see above) w/ thermal lockout
	MS10LCT	= Low current MS10T
	MS12T	= MS12 (see above) w/ thermal lockout
	MS12LCT	= Low current MS12T
	MS16T	= MS16 (see above) w/ thermal lockout
	MS16LCT	= Low current MS16T
Electrical Visual	MS17LCT	= Low current MS17T
	MS13	= Supplied w/ threaded connector & light
	MS14	= Supplied w/ 5 pin Brad Harrison connector & light (male end)
Electrical Visual with Thermal Lockout	MS13DCT	= MS13 (see above), direct current, w/ thermal lockout
	MS13DCLCT	= Low current MS13DCT
	MS14DCT	= MS14 (see above), direct current,w/ thermal lockout
	MS14DCLCT	= Low current MS14DCT

NOTES:

Box 2. Replacement element part numbers are a combination of Boxes 2, 3, and 4. Example: 6R3V

Box 3. E media elements are only available with Buna N seals.

Box 4. For options H, V, and H.5, all aluminum parts are anodized. H.5 seal designation includes the following: EPR seals, stainless steel wire mesh on elements, and light oil coating on housing exterior. Viton® is a registered trademark of DuPont Dow Elastomers. Skydrol® is a registered trademark of Solutia Inc.

Box 5. B porting option supplied with metric mounting holes.

Medium Pressure Filter K9

Model No. of filter in photograph is K91KZ5BP20NP20ND5C.

Features and Benefits (K9)

- Extremely versatile multiple inlet and outlet ports; can be used alone or in series with another K9
- Top loading for easy access for element change-out
- Allows consolidation of inventoried replacement elements by using K-size elements
- Multiple inlet and outlet porting options reduce the need for additional adaptors on installation
- Can be fitted with test ports for oil sampling
- Small profile allows filter to be mounted in tight areas
- Various Dirt Alarm® options
- Meets HF4 automotive standard

Part of Schroeder Industries' Energy Sustainability Initiative

100 gpm
380 L/min
900 psi
60 bar

Filter Housing Specifications

Flow Rating:	Up to 100 gpm (380 L/min) for 150 SUS (32 cSt) fluids
Max. Operating Pressure:	900 psi (60 bar)
Min. Yield Pressure:	3200 psi (220 bar), per NFPA T2.6.1
Rated Fatigue Pressure:	750 psi (52 bar) per NFPA T2.6.1-R1-2005
Temp. Range:	-20°F to 225°F (-29°C to 107°C)
Bypass Setting:	Cracking: 40 psi (2.8 bar) Full Flow: 80 psi (5.5 bar)
Porting Head & Cap:	Cast Aluminum
Element Case:	Steel
Weight of K9-1K:	19 lbs. (8.6 kg)
Weight of K9-2K:	30 lbs. (13.6 kg)
Weight of K9-3K:	41 lbs. (18.6 kg)
Element Change Clearance:	8.50" (215 mm) for 1K; 17.50" (445 mm) for KK; 26.5" (673 mm) for 27K

Fluid Compatibility

Type Fluid	Appropriate Schroeder Media
Petroleum Based Fluids	All E media (cellulose), Z-Media® and ASP® media (synthetic)
High Water Content	All Z-Media® (synthetic), 3, 5 and 10 µ ASP® media (synthetic)
Invert Emulsions	10 and 25 µ Z-Media® (synthetic), 10 µ ASP® media (synthetic)
Water Glycols	3, 5, 10 and 25 µ Z-Media® (synthetic), 3, 5 and 10 µ ASP® media (synthetic)
Phosphate Esters	All Z-Media® (synthetic) with H (EPR) seal designation and 3 and 10 µ E media (cellulose) with H (EPR) seal designation, 3, 5 and 10 µ ASP® media (synthetic)
Skydrol®	3, 5, 10 and 25 µ Z-Media® (synthetic) with H.5 seal designation (EPR seals and stainless steel wire mesh in element, and light oil coating on housing exterior), 3, 5 and 10 µ ASP® Media (synthetic)

K9 Medium Pressure Filter

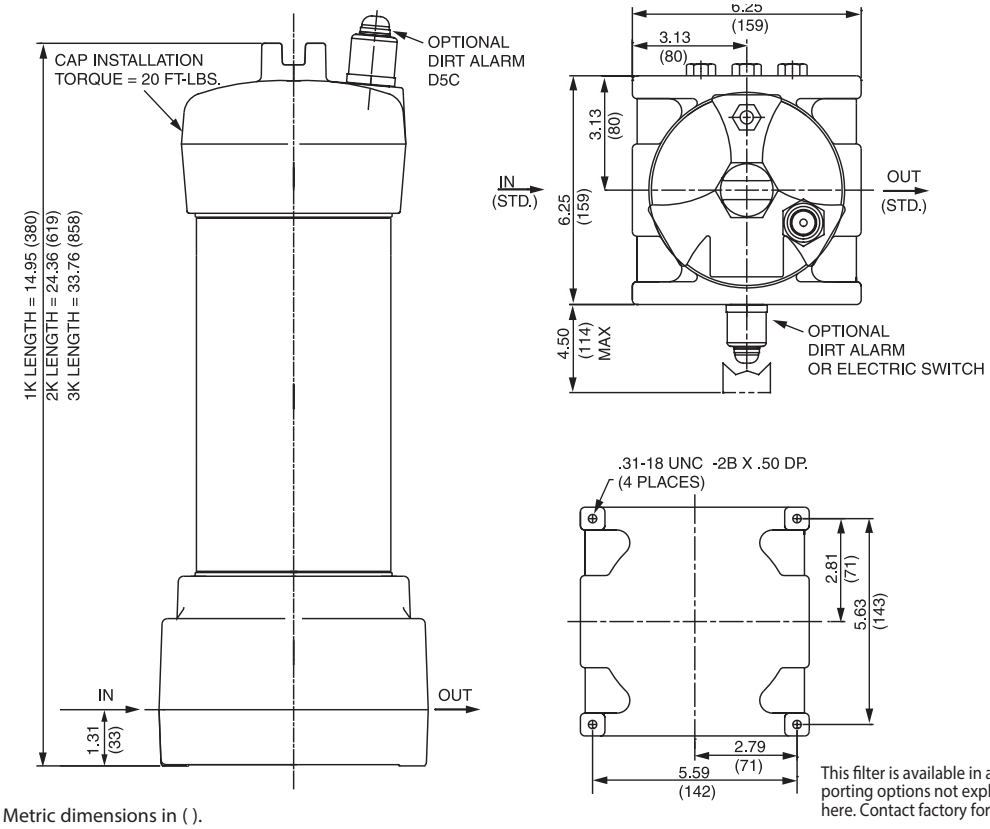

This filter is available in additional porting options not explicitly shown here. Contact factory for details.

Metric dimensions in ( ).
Dimensions shown are inches (millimeters) for general information and overall envelope size only.
For complete dimensions please contact Schroeder Industries to request a certified print.

Element Performance Information & Dirt Holding Capacity

Element	Filtration Ratio Per ISO 4572/NFPA T3.10.8.8 Using automated particle counter (APC) calibrated per ISO 4402			Filtration Ratio per ISO 16889 Using APC calibrated per ISO 11171	
	$ß_x \geq 75$	$ß_x \geq 100$	$ß_x \geq 200$	$ß_x(c) \geq 200$	$ß_x(c) \geq 1000$
KZ1/KKZ1/27KZ1	<1.0	<1.0	<1.0	<4.0	4.2
KZ3/KAS3/KKZ3	<1.0	<1.0	<2.0	<4.0	4.8
KZ5/KAS5/KKZ5	2.5	3.0	4.0	4.8	6.3
KZ10/KAS10/KKZ10	7.4	8.2	10.0	8.0	10.0
KZ25/KKZ25/27KZ25	18.0	20.0	22.5	19.0	24.0
KZW1	N/A	N/A	N/A	<4.0	<4.0
KZW3/KKZW3	N/A	N/A	N/A	4.0	4.8
KZW5/KKZW5	N/A	N/A	N/A	5.1	6.4
KZW10/KKZW10	N/A	N/A	N/A	6.9	8.6
KZW25/KKZW25	N/A	N/A	N/A	15.4	18.5

Dirt Holding Capacity

Element	DHC (gm)	Element	DHC (gm)	Element	DHC (gm)	Element	DHC (gm)	Element	DHC (gm)
KZ1	112	KKZ1	224	27KZ1	336	KZW1	61		
KZ3	115	KKZ3	230	27KZ3	345	KZW3	64	KKZW3	128
KZ5	119	KKZ5	238	27KZ5	357	KZW5	63	KKZW5	126
KZ10	108	KKZ10	216	27KZ10	324	KZW10	57	KKZW10	114
KZ25	93	KKZ25	186	27KZ25	279	KZW25	79	KKZW25	158

Element Collapse Rating: 150 psid (10 bar) for standard elements

Flow Direction: Outside In

Element Nominal Dimensions:
K: 3.9" (99 mm) O.D. x 9.0" (230 mm) long
KK: 3.9" (99 mm) O.D. x 18.0" (460 mm) long
27K: 3.9" (99 mm) O.D. x 27.0" (690 mm) long

Pressure Drop Information

Based on Flow Rate and Viscosity

$\Delta P_{housing}$

K9 $\Delta P_{housing}$ for fluids with sp gr (specific gravity) = 0.86:

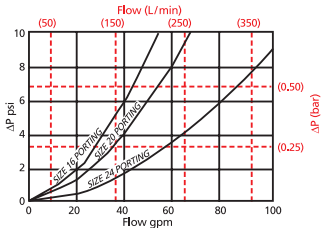

$\Delta P_{element}$

KZ

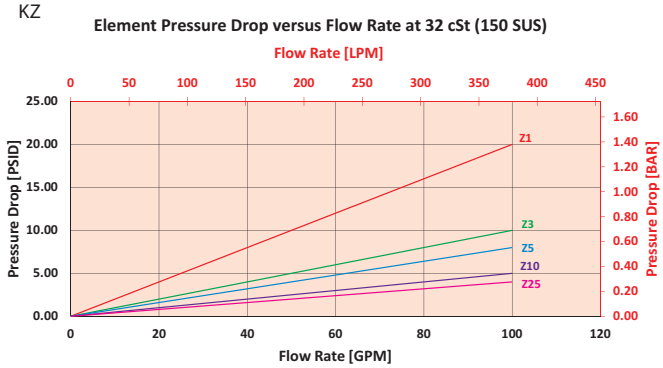

2KZ/KKZ

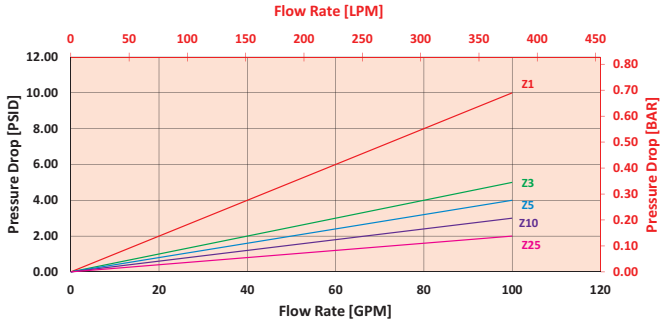

$$\Delta P_{filter} = \Delta P_{housing} + (\Delta P_{element} * V_f)$$

Exercise:

Determine ΔP_{filter} at 50 gpm (189.5 L/min) for K91KZ10BP16NP16ND5 using 160 SUS (34 cSt) fluid.

Use the housing pressure curve to determine $\Delta P_{housing}$ at 50 gpm. In this case, $\Delta P_{housing}$ is 8 psi (.55 bar) on the graph for the K9 housing.

Use the element pressure curve to determine $\Delta P_{element}$ at 50 gpm. In this case, $\Delta P_{element}$ is 2 psi (.14 bar) according to the graph for the KZ10 element.

Because the viscosity in this sample is 160 SUS (34 cSt), we determine the Viscosity Factor (V_f) by dividing the Operating Fluid Viscosity with the Standard Viscosity of 150 SUS (32 cSt). To best determine your Operating Fluid Viscosity, please reference the chart in Appendix D.

Finally, the overall filter pressure differential, ΔP_{filter}, is calculated by adding $\Delta P_{housing}$ with the true element pressure differential, ($\Delta P_{element}$*V_f). The $\Delta P_{element}$ from the graph has to be multiplied by the viscosity factor to get the true pressure differential across the element.

Solution:

$\Delta P_{housing}$ = 8 psi [.55 bar] | $\Delta P_{element}$ = 2 psi [.14 bar]

V_f = 160 SUS (34 cSt) / 150 SUS (32 cSt) = 1.1

ΔP_{filter} = 8 psi + (2 psi * 1.1) = 10.2 psi

OR

ΔP_{filter} = .55 bar + (.14 bar * 1.1) = .70 bar

Note:
If your element is not graphed, use the following equation:
$\Delta P_{element}$ = Flow Rate x ΔP_f. Plug this variable into the overall pressure drop equation.

Ele.	ΔP	Ele.	ΔP	Ele.	ΔP
K3	0.25	2K3/ KK3	0.12	3KZ1/ 27KZ1	0.05
K10	0.09	2K10/ KK10	0.05	3KZ3/ 27KZ3	0.03
K25	0.02	2K25/ KK25	0.01	3KZ5/ 27KZ5	0.02
KAS3	0.10	2KAS3/ KKAS3	0.05	3KZ10/ 27KZ10	0.02
KAS5	0.08	2KAS5/ KKAS5	0.04	3KZ25/ 27KZ25	0.01
KAS10	0.05	2KAS10/ KKAS10	0.03	3K3	0.08
KZX10	0.22	2KZX10/ KKZX10	0.11	3K10	0.03
KZW1	0.43	2KZW1	-	3K25	0.01
KZW3	0.32	2KZW3/ KKZW3	0.16	3KAS3/ 27KAS3	0.03
KZW5	0.28	2KZW5/ KKZW5	0.14	3KAS5/ 27KAS5	0.02
KZW10	0.23	2KZW10/ KKZW10	0.12	3KAS10/ 27KAS10	0.02
KZW25	0.14	2KZW25/ KKZW25	0.07	3KZX10/ 27KZX10	0.07

K9 Medium Pressure Filter

Filter Model Number Selection

How to Build a Valid Model Number for a Schroeder K9:

BOX 1	BOX 2	BOX 3	BOX 4	BOX 5	BOX 6	BOX 7	BOX 8	BOX 9
K9								

Example: NOTE: One option per box

BOX 1	BOX 2	BOX 3	BOX 4	BOX 5	BOX 6	BOX 7	BOX 8	BOX 9	
K9	1K	Z	10	B	P16 N P16 N			D5	= K91KZ10BP16NP16ND5

BOX 1 — Filter Series

K9

BOX 2 — Number & Size of Elements

1 K,KK,27K

2 K

3 K

Porting Options

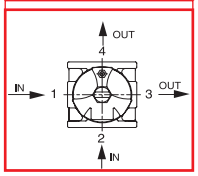

BOX 3 — Media Type

Omit = E-media (cellulose)

Z = Excellement® Z-Media®

AS = Anti-Stat Pleat media (synthetic)

ZW = Aqua-Excellement® ZW media

ZX = Excellement® Z-Media® (high collapse centertube)

W = W media (water removal)

M = media (reusable metal mesh)

BOX 4 — Micron Rating

1 = 1 µ Z, ZW, ZX media

3 = 3 µ AS, E, Z, ZW, ZX media

5 = 5 µ AS, Z, ZW, ZX media

10 = 10 µ AS, E, M, Z, ZW, ZX media

25 = 25 µ E, M, Z, ZW, ZX media

60 = 60 µ M media

150 = 150 µ M media

260 = 260 µ M media

BOX 5 — Seal Material

B = Buna N

V = Viton®

H = EPR

H.5 = Skydrol® Compatibility

BOX 6 — Porting (Specification of all 4 ports is required)

Port 1 (standard)	Port 2	Port 3	Port 4
N = None	N = None	N = None	N = None
P16 = 1" NPTF P20 = 1¼" NPTF P24 = 1½" NPTF	P16 = 1" NPTF P20 = 1¼" NPTF P24 = 1½" NPTF	P16 = 1" NPTF P20 = 1¼" NPTF P24 = 1½" NPTF	P16 = 1" NPTF P20 = 1¼" NPTF P24 = 1½" NPTF
S16 = SAE-16 S20 = SAE-20 S24 = SAE-24	F16 = 1" SAE 4-bolt flange Code 61 F20 = 1¼" SAE 4-bolt flange Code 61 F24 = 1½" SAE 4-bolt flange Code 61	S16 = SAE-16 S20 = SAE-20 S24 = SAE-24	F16 = 1" SAE 4-bolt flange Code 61 F20 = 1¼" SAE 4-bolt flange Code 61 F24 = 1½" SAE 4-bolt flange Code 61
B16 = ISO 228 G-1" B20 = ISO 228 G-1¼" B24 = ISO 228 G-1½"	S16 = SAE-16 S20 = SAE-20 S24 = SAE-24	B16 = ISO 228 G-1" B20 = ISO 228 G-1¼" B24 = ISO 228 G-1½"	S16 = SAE-16 S20 = SAE-20 S24 = SAE-24
	B16 = ISO 228 G-1" B20 = ISO 228 G-1¼" B24 = ISO 228 G-1½"		B16 = ISO 228 G-1" B20 = ISO 228 G-1¼" B24 = ISO 228 G-1½"

BOX 7 — Bypass

Omit = 40 PSI Bypass

X = Blocked bypass

10 = 10 psi bypass setting

20 = 20 psi bypass setting

25 = 25 psi bypass setting

30 = 30 psi bypass setting

60 = 60 psi bypass setting

BOX 8 — Test Points

Omit = None

U = Test point in cap (upstream)

UU = Test points in block (upstream and downstream)

BOX 9 — Dirt Alarm® Options

	Omit = None
Visual	D5 = Visual pop-up D5C = D5 in cap
Visual with Thermal Lockout	D8 = Visual w/ thermal lockout D8C = D8 in cap
Electrical	MS5 = Electrical w/ 12 in. 18 gauge 4-conductor cable MS5LC = Low current MS5 MS10 = Electrical w/ DIN connector (male end only) MS10LC = Low current MS10 MS11 = Electrical w/ 12 ft. 4-conductor wire MS12 = Electrical w/ 5 pin Brad Harrison connector (male end only) MS12LC = Low current MS12 MS16 = Electrical w/ weather-packed sealed connector MS16LC = Low current MS16 MS17LC = Electrical w/ 4 pin Brad Harrison male connector
Electrical with Thermal Lockout	MS5T = MS5 (see above) w/ thermal lockout MS5LCT = Low current MS5T MS10T = MS10 (see above) w/ thermal lockout MS10LCT = Low current MS10T MS12T = MS12 (see above) w/ thermal lockout MS12LCT = Low current MS12T MS16T = MS16 (see above) w/ thermal lockout MS16LCT = Low current MS16T MS17LCT = Low current MS17T
Electrical Visual	MS13 = Supplied w/ threaded connector & light MS14 = Supplied w/ 5 pin Brad Harrison connector & light (male end)
Electrical Visual with Thermal Lockout	MS13DCT = MS13 (see above), direct current, w/ thermal lockout MS13DCLCT = Low current MS13DCT MS14DCT = MS14 (see above), direct current, w/ thermal lockout MS14DCLCT = Low current MS14DCT

NOTES:

Box 2. Double and triple stacking of K-size elements can be replaced by KK and 27K elements, respectively. Number of elements must equal 1 when using KK or 27K elements. Replacement element part numbers are identical to contents of Boxes 2, 3, 4, and 5.

Box 5. For options H, V, and H.5, all aluminum parts are anodized.
H.5 seal designation includes the following: EPR seals, stainless steel wire mesh on elements, and light oil coating on housing exterior.
Viton® is a registered trademark of DuPont Dow Elastomers.
Skydrol® is a registered trademark of Solutia Inc.

Box 7. When X is paired with a standard filter series, a standard bushing and spring plate will be used.

Box 9. If location 1 is used as inlet port, dirt alarm will occupy location 2. If location 2 is used as inlet port, dirt alarm will occupy location 1. If dual inlet ports are specified, the only dirt alarm option is pop-up indicator in cap (D5C).

Features and Benefits

- Two or three patented-pending K9 filters supplied in series as a single filter assembly providing in-line single pass particulate and water filtration
- Meets HF4 automotive standard
- 900 psi rating covers almost all transfer line pressure specs including air driven transfer systems
- Top loading for easy access for element change out
- Allows consolidation of inventoried elements by using K-size elements
- Can be fitted with test points for oil sampling

100 gpm
380 L/min
900 psi
60 bar

Model No. of filters in photograph are 3K9127EDBBP20P20UUD5C and Custom 2K9.

Filter Housing Specifications

Flow Rating:	Up to 100 gpm (380 L/min) for 150 SUS (32 cSt) fluids
Max. Operating Pressure:	900 psi (60 bar)
Min. Yield Pressure:	3200 psi (220 bar), per NFPA T2.6.1
Rated Fatigue Pressure:	750 psi (52 bar) per NFPA T2.6.1-R1-2005
Temp. Range:	-20°F to 225°F (-29°C to 107°C)
Bypass Setting:	Cracking: 40 psi (2.8 bar) each filter housing
Porting Base & Cap:	Cast Aluminum
Element Case:	Steel
Element Change Clearance:	8.50" (215 mm) for 1K; 17.5" (445 mm) for KK; 26.5" (673 mm) for 27K

Fluid Compatibility

Type Fluid	Appropriate Schroeder Media
Petroleum Based Fluids	All Z-Media® and ASP® media (synthetic)
High Water Content	All Z-Media® and ASP® media (synthetic)
Invert Emulsions	10 and 25 µ Z-Media® and 10 µ ASP® media (synthetic)
Water Glycols	3, 5, 10 and 25 µ Z-Media®, 3, 5 and 10 µ ASP® media (synthetic)
Phosphate Esters	All Z-Media® (synthetic) with H (EPR) seal designation and 3 and 10 µ E media (cellulose) with H (EPR) seal designation
Skydrol®	3, 5, 10 and 25 µ Z-Media® (synthetic) with H.5 seal designation (EPR seals and stainless steel wire mesh in element, and light oil coating on housing exterior), 3, 5 and 10 µ ASP® Media (synthetic)

2K9/3K9 Single Pass Filter Kit

2K9

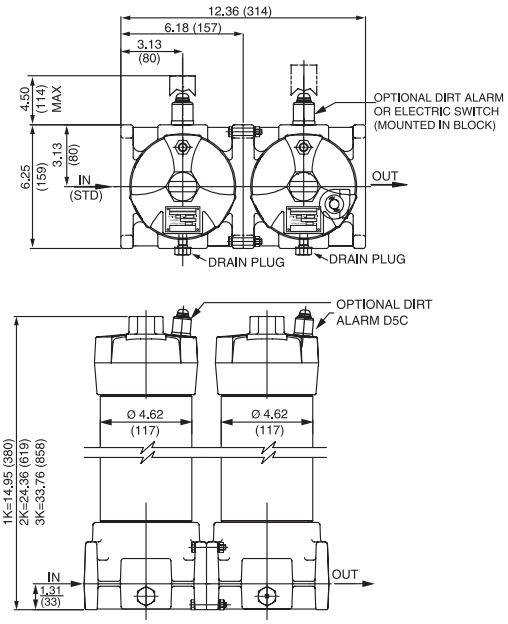

3K9

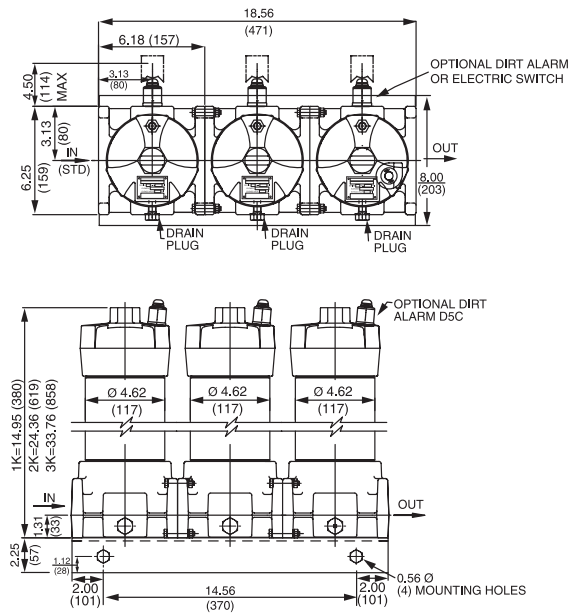

Metric dimensions in ( ).
Dimensions shown are inches (millimeters) for general information and overall envelope size only.
For complete dimensions please contact Schroeder Industries to request a certified print.

Element Performance Information & Dirt Holding Capacity

Element	Filtration Ratio Per ISO 4572/NFPA T3.10.8.8 Using automated particle counter (APC) calibrated per ISO 4402			Filtration Ratio per ISO 16889 Using APC calibrated per ISO 11171	
	$ß_x \geq 75$	$ß_x \geq 100$	$ß_x \geq 200$	$ß_x(c) \geq 200$	$ß_x(c) \geq 1000$
KZ1/KKZ1/27KZ1	<1.0	<1.0	<1.0	<4.0	4.2
KZ3/KKZ3/27KZ3	<1.0	<1.0	<2.0	<4.0	4.8
KZ5/KKZ5/27KZ5	2.5	3.0	4.0	4.8	6.3
KZ10/KKZ10/27KZ10	7.4	8.2	10.0	8.0	10.0
KZ25/KKZ25/27KZ25	18.0	20.0	22.5	19.0	24.0
KZW1	N/A	N/A	N/A	<4.0	<4.0
KZW3/KKZW3	N/A	N/A	N/A	4.0	4.8
KZW5/KKZW5	N/A	N/A	N/A	5.1	6.4
KZW10/KKZW10	N/A	N/A	N/A	6.9	8.6
KZW25/KKZW25	N/A	N/A	N/A	15.4	18.5

Element	DHC (gm)	Element	DHC (gm)	Element	DHC (gm)	Element	DHC (gm)	Element	DHC (gm)
KZ1	112	KKZ1	224	27KZ1	336	KZW1	61		
KZ3	115	KKZ3/	230	27KZ3	345	KZW3	64	KKZW3	128
KZ5	119	KKZ5	238	27KZ5	357	KZW5	63	KKZW5	126
KZ10	108	KKZ10	216	27KZ10	324	KZW10	57	KKZW10	114
KZ25	93	KKZ25	186	27KZ25	279	KZW25	79	KKZW25	158

Element Collapse Rating: 150 psid (10 bar) for standard elements

Flow Direction: Outside In

Element Nominal Dimensions:
K: 3.9" (99 mm) O.D. x 9.0" (230 mm) long
KK: 3.9" (99 mm) O.D. x 18.0" (460 mm) long
27K: 3.9" (99 mm) O.D. x 27.0" (690 mm) long

Pressure Drop Information

Based on Flow Rate and Viscosity

$\Delta P_{housing}$

2K9/3K9 $\Delta P_{housing}$ for fluids with sp gr (specific gravity) = 0.86:

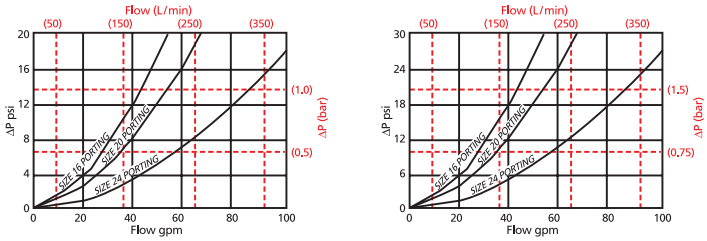

$\Delta P_{element}$

KZ

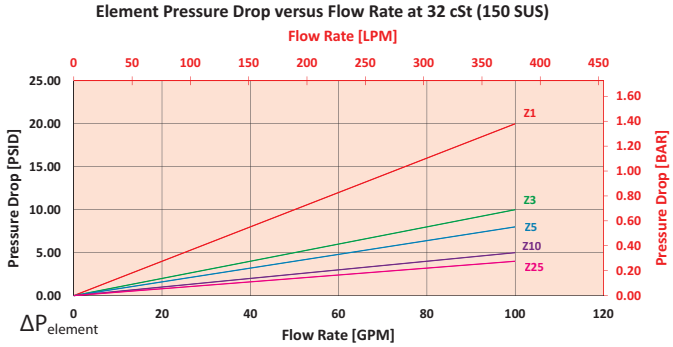

$\Delta P_{element}$

2KZ

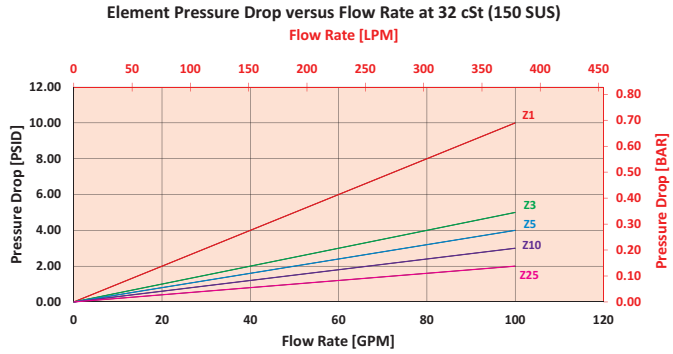

$$\Delta P_{filter} = \Delta P_{housing} + (\Delta P_{element} * V_f)$$

Exercise:

Determine ΔP_{filter} at 50 gpm (189.5 L/min) for 2K9109DBBP16P16D5 using 160 SUS (34 cSt) fluid.

Use the housing pressure curve to determine $\Delta P_{housing}$ at 50 gpm. In this case, $\Delta P_{housing}$ is 16 psi (1.1 bar) on the graph for the 2K9 housing.

Use the element pressure curve to determine $\Delta P_{element}$ at 50 gpm for the first element. In this case, $\Delta P_{element}$ is 2 psi (.14 bar) according to the graph for the KZ10 element.

Use the element pressure curve to determine $\Delta P_{element^2}$ at 50 gpm for the first element. In this case, $\Delta P_{element}$ is 5 psi (.34 bar) according to the graph for the KZ3 element.

Because the viscosity in this sample is 160 SUS (34 cSt), we determine the Viscosity Factor (V_f) by dividing the Operating Fluid Viscosity with the Standard Viscosity of 150 SUS (32 cSt). To best determine your Operating Fluid Viscosity, please reference the chart in Appendix D.

Finally, the overall filter pressure differential, ΔP_{filter}, is calculated by adding $\Delta P_{housing}$ with the true element pressure differential, ($\Delta P_{element}$*V_f). The $\Delta P_{element}$ from the graph has to be multiplied by the viscosity factor to get the true pressure differential across the element.

Solution:

$\Delta P_{housing}$ = 16 psi [1.1 bar] | $\Delta P_{element^1}$ = 2 psi [.14 bar] | $\Delta P_{element^2}$ = 5 psi [.34 bar]

V_f = 160 SUS (34 cSt) / 150 SUS (32 cSt) = 1.1

ΔP_{filter} = 16 psi + (2 psi * 1.1) + (5 psi * 1.1) = 23.7 psi

OR

ΔP_{filter} = 1.1 bar + (.14 bar * 1.1) + (.34 * 1.1) = 1.6 bar

Note:
If your element is not graphed, use the following equation:
$\Delta P_{element}$ = Flow Rate x ΔP_f. Plug this variable into the overall pressure drop equation.

Ele.	ΔP	Ele.	ΔP	Ele.	ΔP
K3	0.25	2K3/ KK3	0.12	3KZ1/ 27KZ1	0.05
K10	0.09	2K10/ KK10	0.05	3KZ3/ 27KZ3	0.03
K25	0.02	2K25/ KK25	0.01	3KZ5/ 27KZ5	0.02
KAS3	0.10	2KAS3/ KKAS3	0.05	3KZ10/ 27KZ10	0.02
KAS5	0.08	2KAS5/ KKAS5	0.04	3KZ25/ 27KZ25	0.01
KAS10	0.05	2KAS10/ KKAS10	0.03	3K3	0.08
KZX10	0.22	2KZX10/ KKZX10	0.11	3K10	0.03
KZW1	0.43	2KZW1	-	3K25	0.01
KZW3	0.32	2KZW3/ KKZW3	0.16	3KAS3/ 27KAS3	0.03
KZW5	0.28	2KZW5/ KKZW5	0.14	3KAS5/ 27KAS5	0.02
KZW10	0.23	2KZW10/ KKZW10	0.12	3KAS10/ 27KAS10	0.02
KZW25	0.14	2KZW25/ KKZW25	0.07	3KZX10/ 27KZX10	0.07

2K9/3K9 Single Pass Filter Kit

Filter Model Number Selection

How to Build a Valid Model Number for a Schroeder 2K9:

BOX 1	BOX 2	BOX 3	BOX 4	BOX 5	BOX 6	BOX 7	BOX 8	BOX 9	BOX 10	BOX 11	BOX 12
2K9 –	–	–	–	–	–	–	–	–	–	–	

Example: NOTE: One option per box

BOX 1	BOX 2	BOX 3	BOX 4	BOX 5	BOX 6	BOX 7	BOX 8	BOX 9	BOX 10	BOX 11	BOX 12	
2K9 –	1 –	09 –	D –	B –	B –	B –	P16 –	P16 –	–	D5 –	–	= 2K9109DBBBP16P16D5

BOX 1 — Filter

Filter
2K9
3K9

BOX 2 — Number of Elements

Number of Elements
1
2
3

BOX 3 — Length of Elements

Length of Elements
09 = K-Size Element
18 = KK Size Element
27 = 27K Size Element

BOX 4 — First Housing Element Micron Rating

First Housing Element Micron Rating
A = 1 µ Z-Media®
B = 3 µ Z-Media®
C = 5 µ Z-Media®
D = 10 µ Z-Media®
E = 25 µ Z-Media®
F = W Water Removal
G = 1 µ ZW-media
H = 3 µ ZW-media
J = 5 µ ZW-media
K = 10 µ ZW-media
L = 25 µ ZW-media
M = 3 µ AS-media
N = 5 µ AS-media
O = 10 µ AS-media

BOX 5 — Second Housing Element Micron Rating

Second Housing Element Micron Rating
A = 1 µ Z-Media®
B = 3 µ Z-Media®
C = 5 µ Z-Media®
D = 10 µ Z-Media®
E = 25 µ Z-Media®
F = W Water Removal
G = 1 µ ZW-media
H = 3 µ ZW-media
J = 5 µ ZW-media
K = 10 µ ZW-media
L = 25 µ ZW-media
M = 3 µ AS-media
N = 5 µ AS-media
O = 10 µ AS-media

BOX 6 — Third Housing

Third Housing	
A	= 1 µ Z-Media®
B	= 3 µ Z-Media®
C	= 5 µ Z-Media®
D	= 10 µ Z-Media®
E	= 25 µ Z-Media®
F	= W media (water removal)
G	= 1 µ ZW-media
H	= 3 µ ZW-media
J	= 5 µ ZW-media
K	= 10 µ ZW-media
L	= 25 µ ZW-media
M	= 3 µ AS-media
N	= 5 µ AS-media
O	= 10 µ AS-media

BOX 7 — Seal Material

Seal Material	
B	= Buna N
V	= Viton®
H	= EPR
H.5	= Skydrol® Compatible

BOX 8 — "In" Porting

"In" Porting
P16 = 1" NPTF
P20 = 1¼" NPTF
P24 = 1½" NPTF
B16 = ISO 228 G-1"
B20 = ISO 228 G-1¼"
B24 = ISO 228 G-1½"
F16 = 1" SAE 4-bolt flange Code 61
F20 = 1¼" SAE 4-bolt flange Code 61
F24 = 1½" SAE 4-bolt flange Code 61
S16 = SAE-16
S20 = SAE-20
S24 = SAE-24

BOX 9 — "Out" Porting

"Out" Porting
P16 = 1" NPTF
P20 = 1¼" NPTF
P24 = 1½" NPTF
B16 = ISO 228 G-1"
B20 = ISO 228 G-1¼"
B24 = ISO 228 G-1½"
F16 = 1" SAE 4-bolt flange Code 61
F20 = 1¼" SAE 4-bolt flange Code 61
F24 = 1½" SAE 4-bolt flange Code 61
S16 = SAE-16
S20 = SAE-20
S24 = SAE-24

BOX 10 — Bypass

Bypass
Omit = 40 PSI Bypass
30 = 30 psi bypass
50 = 50 psi bypass

BOX 11 — Dirt Alarm® Options

	Omit =	None
Visual	D5 =	Visual pop-up
	D5C =	D5 in cap
Visual with Thermal Lockout	D8 =	Visual w/ thermal lockout
	D8C =	D8 in cap
Electrical	MS5 =	Electrical w/ 12 in. 18 gauge 4-conductor cable
	MS5LC =	Low current MS5
	MS10 =	Electrical w/ DIN connector (male end only)
	MS10LC =	Low current MS10
	MS11 =	Electrical w/ 12 ft. 4-conductor wire
	MS12 =	Electrical w/ 5 pin Brad Harrison connector (male end only)
	MS12LC =	Low current MS12
	MS16 =	Electrical w/ weather-packed sealed connector
	MS16LC =	Low current MS16
	MS17LC =	Electrical w/ 4 pin Brad Harrison male connector
Electrical with Thermal Lockout	MS5T =	MS5 (see above) w/ thermal lockout
	MS5LCT =	Low current MS5T
	MS10T =	MS10 (see above) w/ thermal lockout
	MS10LCT =	Low current MS10T
	MS12T =	MS12 (see above) w/ thermal lockout
	MS12LCT =	Low current MS12T
	MS16T =	MS16 (see above) w/ thermal lockout
	MS16LCT =	Low current MS16T
	MS17LCT =	Low current MS17T
Electrical Visual	MS13 =	Supplied w/ threaded connector & light
	MS14 =	Supplied w/ 5 pin Brad Harrison connector & light (male end)
Electrical Visual with Thermal Lockout	MS13DCT =	MS13 (see above), direct current, w/ thermal lockout
	MS13DCLCT =	Low current MS13DCT
	MS14DCT =	MS14 (see above), direct current, w/ thermal lockout
	MS14DCLCT =	Low current MS14DCT

BOX 12 — Test Points

Test Points	
Omit = None	
U =	Test point in cap (upstream)
UU =	Test points in block (upstream and downstream)

NOTES:

Box 2. Double and triple stacking of K-size elements can be replaced by KK and 27K elements, respectively. Number of elements must equal 1 when using KK or 27K elements. ZW media not available in 27K length.

Box 4 & 5. Replacement element part numbers are identical to K9 replacement parts. Please reference page 184.

Box 6. For options H, V, and H.5, all aluminum parts are anodized. H.5 seal designation includes the following: EPR seals, stainless steel wire mesh on elements, and light oil coating on housing exterior. Viton® is a registered trademark of DuPont Dow Elastomers.Skydrol® is a registered trademark of Solutia Inc.

Box 12. Option UU not available in combination with indicator in block.

Model No. of filter in photograph is QF539QZ10P32.

Features and Benefits

- Element changeout from the top minimizes oil spillage
- Available with optional core assembly to accommodate coreless elements
- Offered with standard Q, QPML deep-pleated and QCLQF coreless elements in 16" and 39" lengths with standard Viton® seals
- Offered in pipe, SAE straight thread, and flange porting
- Optional inlet and outlet test points
- WQF5 model for water service also available
- Various Dirt Alarm® options

300 gpm
1135 L/min
500 psi
35 bar

Filter Housing Specifications

Flow Rating:	Up to 300 gpm (1135 L/min) for 150 SUS (32 cSt) fluids
Max. Operating Pressure:	500 psi (35 bar)
Min. Yield Pressure:	2500 psi (172 bar), per NFPA T2.6.1-R1-2005
Rated Fatigue Pressure:	Contact Factory
Temp. Range:	-20°F to 225°F (-29°C to 107°C)
Bypass Setting:	Cracking: 30 psi (2.1 bar) Full Flow: 55 psi (3.8 bar)
Porting Base:	Cast Aluminum
Element Case:	Steel
Cap:	Ductile Iron
Weight of QF516: Weight of QF539:	85 lbs. (39 kg) 120 lbs. (55 kg)
Element Change Clearance:	16Q 12.0" (205 mm) 39Q 33.8" (859 mm)

Fluid Compatibility

Type Fluid	Appropriate Schroeder Media
Petroleum Based Fluids	All Z-Media® and ASP® media (synthetic)
High Water Content	All Z-Media® and ASP® media (synthetic)
Invert Emulsions	10 and 25 µ Z-Media® and 10 µ ASP® media (synthetic)
Water Glycols	3, 5, 10 and 25 µ Z-Media® and all ASP® Media (synthetic)
Phosphate Esters	All Z-Media® (synthetic) with H (EPR) seal designation and all ASP® media (synthetic)
Skydrol®	3, 5, 10 and 25 µ Z-Media® (synthetic) with H.5 seal designation (EPR seals and stainless steel wire mesh in element, and light oil coating on housing exterior) and all ASP® media (synthetic)

In-Line Filter

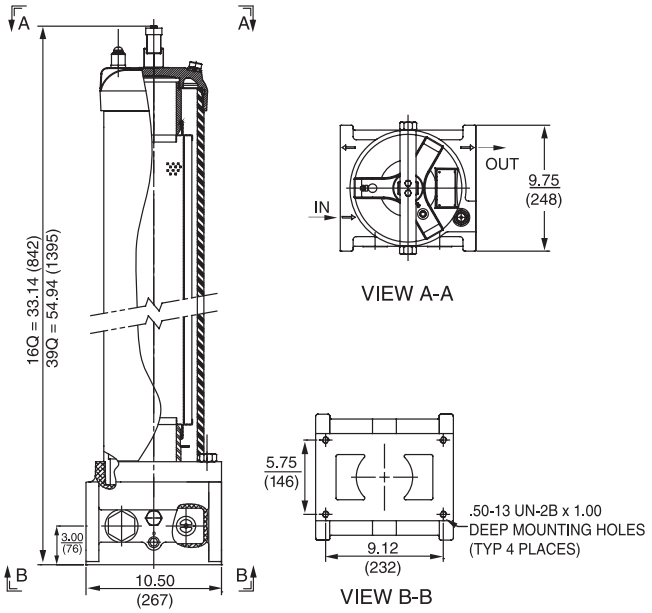

Metric dimensions in ( ).
Dimensions shown are inches (millimeters) for general information and overall envelope size only.
For complete dimensions please contact Schroeder Industries to request a certified print.

Element Performance Information & Dirt Holding Capacity

		Filtration Ratio Per ISO 4572/NFPA T3.10.8.8 Using automated particle counter (APC) calibrated per ISO 4402			Filtration Ratio per ISO 16889 Using APC calibrated per ISO 11171	
	Element	$ß_x \geq 75$	$ß_x \geq 100$	$ß_x \geq 200$	$ß_x(c) \geq 200$	$ß_x(c) \geq 1000$
16Q	Z1/CLQFZ1/PMLZ1	<1.0	<1.0	<1.0	<4.0	4.2
	Z3/CLQFZ3/PMLZ3	<1.0	<1.0	<2.0	<4.0	4.8
	Z5/CLQFZ5/PMLZ5	2.5	3.0	4.0	4.8	6.3
	Z10/CLQFZ10/PMLZ10	7.4	8.2	10.0	8.0	10.0
	Z25/CLQFZ25/PMLZ25	18.0	20.0	22.5	19.0	24.0
39Q	Z1/CLQFZ1/PMLZ1	<1.0	<1.0	<1.0	<4.0	4.2
	Z3/CLQFZ3/PMLZ3	<1.0	<1.0	<2.0	<4.0	4.8
	Z5/CLQFZ5/PMLZ5	2.5	3.0	4.0	4.8	6.3
	Z10/CLQFZ10/PMLZ10	7.4	8.2	10.0	8.0	10.0

	Element	DHC (gm)	Element	DHC (gm)	Element	DHC (gm)
16Q	Z1	276	CLQFZ1	307	PMLZ1	307
	Z3	283	CLQFZ3	315	PMLZ3	315
	Z5	351	CLQFZ5	364	PMLZ5	364
	Z10	280	CLQFZ10	306	PMLZ10	330
	Z25	254	CLQFZ25	278	PMLZ25	299
39Q	Z1	974	CLQFZ1	1259	PMLZ1	1485
	Z3	1001	CLQFZ3	1293	PMLZ3	1525
	Z5	954	CLQFZ5	1302	PMLZ5	1235
	Z10	940	CLQFZ10	1214	PMLZ10	1432
	Z25	853	CLQFZ25	1102	PMLZ25	1299

Element Collapse Rating: Q and QPML: 150 psid (10 bar), QCLQF: 100 psid (7 bar)

Flow Direction: Outside In

Element Nominal Dimensions:
- 16Q: 6.0" (150 mm) O.D. x 16.85" (430 mm) long
- 16QCLQF: 6.0" (150 mm) O.D. x 18.21" (463 mm) long
- 16QPML: 6.0" (150 mm) O.D. x 16.00" (405 mm) long
- 39QCLQF: 6.0" (150 mm) O.D. x 40.01" (1016 mm) long
- 39QPML: 6.0" (150 mm) O.D. x 37.80" (960 mm) long

Pressure Drop Information

Based on Flow Rate and Viscosity

$\Delta P_{housing}$

QF5 $\Delta P_{housing}$ for fluids with sp gr (specific gravity) = 0.86:

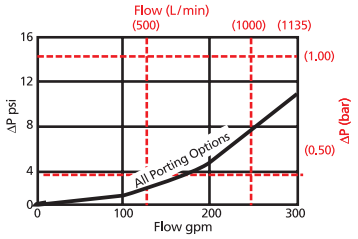

$\Delta P_{element}$

16QCLQFZ

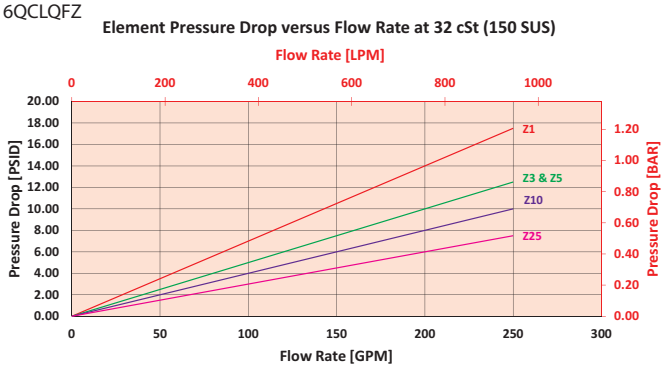

39QCLQFZ

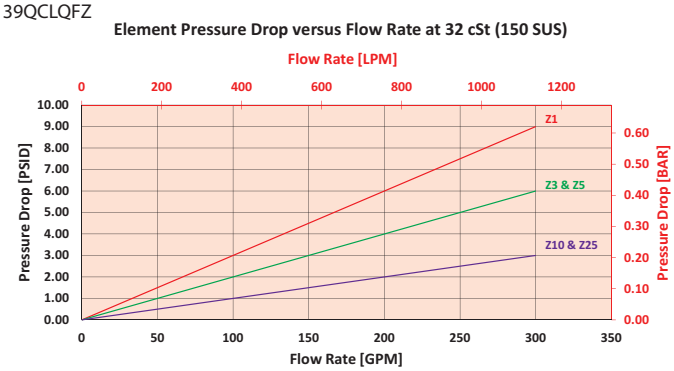

$$\Delta P_{filter} = \Delta P_{housing} + (\Delta P_{element} * V_f)$$

Exercise:

Determine ΔP_{filter} at 100 gpm (379 L/min) for QF539QZ3P32UDPG using 160 SUS (34 cSt) fluid.

Use the housing pressure curve to determine $\Delta P_{housing}$ at 100 gpm. In this case, $\Delta P_{housing}$ is 2 psi (.14 bar) on the graph for the QF5 housing.

Use the element pressure curve to determine $\Delta P_{element}$ at 100 gpm. In this case, $\Delta P_{element}$ is 1 psi (.07 bar) according to the graph for the 39QZ3 element.

Because the viscosity in this sample is 160 SUS (34 cSt), we determine the Viscosity Factor (V_f) by dividing the Operating Fluid Viscosity with the Standard Viscosity of 150 SUS (32 cSt). To best determine your Operating Fluid Viscosity, please reference the chart in Appendix D.

Finally, the overall filter pressure differential, ΔP_{filter}, is calculated by adding $\Delta P_{housing}$ with the true element pressure differential, ($\Delta P_{element} * V_f$). The $\Delta P_{element}$ from the graph has to be multiplied by the viscosity factor to get the true pressure differential across the element.

Solution:

$\Delta P_{housing}$ = 2 psi [.14 bar] | $\Delta P_{element}$ = 1 psi [.07 bar]

V_f = 160 SUS (34 cSt) / 150 SUS (32 cSt) = 1.1

ΔP_{filter} = 2 psi + (1 psi * 1.1) = 3.1 psi

OR

ΔP_{filter} = .14 bar + (.07 bar * 1.1) = .22 bar

Note:
If your element is not graphed, use the following equation:
$\Delta P_{element}$ = Flow Rate x ΔP_f. Plug this variable into the overall pressure drop equation.

Ele.	ΔP	Ele.	ΔP	Ele.	ΔP
16QAS3V	0.04	16QPMLZ1	0.08	39QZ1	0.03
16QAS5V	0.04	16QPMLZ3	0.05	39QZ3	0.01
16QAS10V	0.03	16QPMLZ5	0.05	39QZ5	0.01
16QPML-AS3V	0.05	16QPMLZ10	0.04	39QZ10	0.01
16QPML-AS5V	0.05	16QPMLZ25	0.02	39QZ25	0.01
16QPML-AS10V	0.04	39QAS3V	0.01	39QPMLZ1	0.03
16QZ1	0.09	39QAS5V	0.01	39QPMLZ3	0.02
16QZ3	0.04	39QAS10V	0.01	39QPMLZ5	0.02
16QZ5	0.04	39QPMLAS-3V	0.02	39QPMLZ10	0.01
16QZ10	0.03	39QPMLAS-5V	0.02	39QPMLZ25	0.01
16QZ25	0.01	39QPMLAS-10V	0.01		

QF5 In-Line Filter

Filter Model Number Selection

How to Build a Valid Model Number for a Schroeder QF5:

BOX 1	BOX 2	BOX 3	BOX 4	BOX 5	BOX 6	BOX 7	BOX 8	BOX 9	BOX 10
QF5									

BOX 1	BOX 2	BOX 3	BOX 4	BOX 5	BOX 6	BOX 7	BOX 8	BOX 9	BOX 10	
QF5	39	Q	Z	3		P32		U	DPG	=QF539QZ3P32UDPG

BOX 1

Filter Series
QF5
WQF5 (Water)

BOX 2

Element Length (in)
16
39

BOX 3

Element Style
Q
QCLQF
QPML

BOX 4

Media Type
Z = Excellement® Z-Media® (synthetic)
AS = Anti-Stat Pleat media (synthetic)
W = W Media (water removal)
Water System Element Options
QM25 = Q size 25 µ M media (resuable metal)
QM60 = Q size 60 µ M media (resuable metal)
QM150 = Q size 150 µ M media (resuable metal)
(Omit box 3 and 5 if water system element is used)

BOX 5

Micron Rating
1 = 1 µ Z-Media®
3 = 3 µ AS and Z-Media®
5 = 5 µ AS and Z-Media®
10 = 10 µ AS and Z-Media®
25 = 25 µ Z-Media®

BOX 6

Housing Seal Material
Omit = Buna N
H = EPR
V = Viton®

BOX 7

Porting	
P32 = 2"NPTF	F32 = 2" SAE 4-bolt flange Code 61
P40 = 2½"NPTF	
P48 = 3"NPTF	F40 = 2½"SAE 4-bolt flange Code 61
S32 = SAE-32	F48 = 3" SAE 4-bolt flange Code 61

BOX 8

Bypass Setting
Omit = 30 psi cracking
50 = 50 psi cracking
X = Blocked bypass

BOX 9

Test Points
Omit = None
U = Test point in cap (upstream)
UU = Test points in block (upstream and downstream)

BOX 10

Dirt Alarm® Options		
None	Omit =	None
Visual	DPG =	Standard differential pressure gauge
	D5 =	Visual pop-up
	D5C =	D5 in cap
	D5R =	D5 mounted opposite standard location
Visual with Thermal Lockout	D8 =	Visual w/ thermal lockout
	D8C =	D8 in cap
	D8R =	D8 mounted opposite standard location
Electrical	MS5 =	Electrical w/ 12 in. 18 gauge 4-conductor cable
	MS5LC =	Low current MS5
	MS10 =	Electrical w/ DIN connector (male end only)
	MS10LC =	Low current MS10
	MS11 =	Electrical w/ 12 ft. 4-conductor wire
	MS12 =	Electrical w/ 5 pin Brad Harrison connector (male end only)
	MS12LC =	Low current MS12
	MS16 =	Electrical w/ weather-packed sealed connector
	MS16LC =	Low current MS16
	MS17LC =	Electrical w/ 4 pin Brad Harrison male connector
Electrical with Thermal Lockout	MS5T =	MS5 (see above) w/ thermal lockout
	MS5LCT =	Low current MS5T
	MS10T =	MS10 (see above) w/ thermal lockout
	MS10LCT =	Low current MS10T
	MS12T =	MS12 (see above) w/ thermal lockout
	MS12LCT =	Low current MS12T
	MS16T =	MS16 (see above) w/ thermal lockout
	MS16LCT =	Low current MS16T
	MS17LCT =	Low current MS17T
Electrical Visual	MS13 =	Supplied w/ threaded connector & light
	MS14 =	Supplied w/ 5 pin Brad Harrison connector & light (male end)
Electrical Visual with Thermal Lockout	MS13DCT =	MS13 (see above), direct current, w/ thermal lockout
	MS13DCLCT =	Low current MS13DCT
	MS14DCT =	MS14 (see above), direct current, w/ thermal lockout
	MS14DCLCT =	Low current MS14DCT

NOTES:

Box 2. Replacement element part numbers are a combination of Boxes 2, 3, 4 and 5 plus the letter V.
Example: 39QZ10V

Box 3. QCLQF are CoreCentric® coreless elements – housing includes rigid metal core. QPML are deep-pleated elements with more media and higher dirt holding capacity.

Box 4. For option W, Box 3 must equal Q.

Box 6. All elements for this filter are supplied with Viton® seals. Seal designation in Box 6 applies to housing only. Viton® is a registered trademark of DuPont Dow Elastomers.

Box 8. When X is paired with a standard filter series, a standard bushing and spring plate will be used.

Cold Start Protection Inside-Out Flow Filter QF5i

Model No. of filter in photograph is QF5i16QCLIZ10F3260M.

Features and Benefits (QF5i)

- Magnetic filtration protection while filter is in cold start bypass
- Coreless QCL element with inside-out flow for eco-friendly easy disposal
- Efficient means to remove both ferromagnetic and non-ferromagnetic parts from the fluid
- Designed for inside-out flow
- Element changeout from the top minimizes oil spillage
- Offered in pipe, SAE straight thread, and flange porting
- Optional inlet and outlet test points
- Various Dirt Alarm® options

120 gpm
454 L/min
500 psi
35 bar

Filter Housing Specifications

Flow Rating:	Up to 120 gpm (454 L/min) for 150 SUS (32 cSt) fluids
Max. Operating Pressure:	500 psi (35 bar)
Min. Yield Pressure:	2500 psi (172 bar), per NFPA T2.6.1-R1-2005
Rated Fatigue Pressure:	Contact Factory
Temp. Range:	-20°F to 225°F (-29°C to 107°C)
Bypass Setting:	Cracking: 60 psi (4.1 bar) Full Flow: 95 psi (6.6 bar)
Porting Base:	Cast Aluminum
Element Case:	Steel
Cap:	Ductile Iron
Weight of QF5i16: Weight of QF5i39:	85 lbs. (39 kg) 120 lbs. (55 kg)
Element Change Clearance:	16QCLI 16.0" (407 mm)

Fluid Compatibility

Type Fluid	Appropriate Schroeder Media
Petroleum Based Fluids	All Z-Media® and ASP® media (synthetic)
High Water Content	All Z-Media® and ASP® media (synthetic)
Invert Emulsions	10 and 25 µ Z-Media® and 10 µ ASP® media (synthetic)
Water Glycols	3, 5, 10 and 25 µ Z-Media® and all ASP® Media (synthetic)

QF5i Cold Start Protection Inside-Out Flow Filter

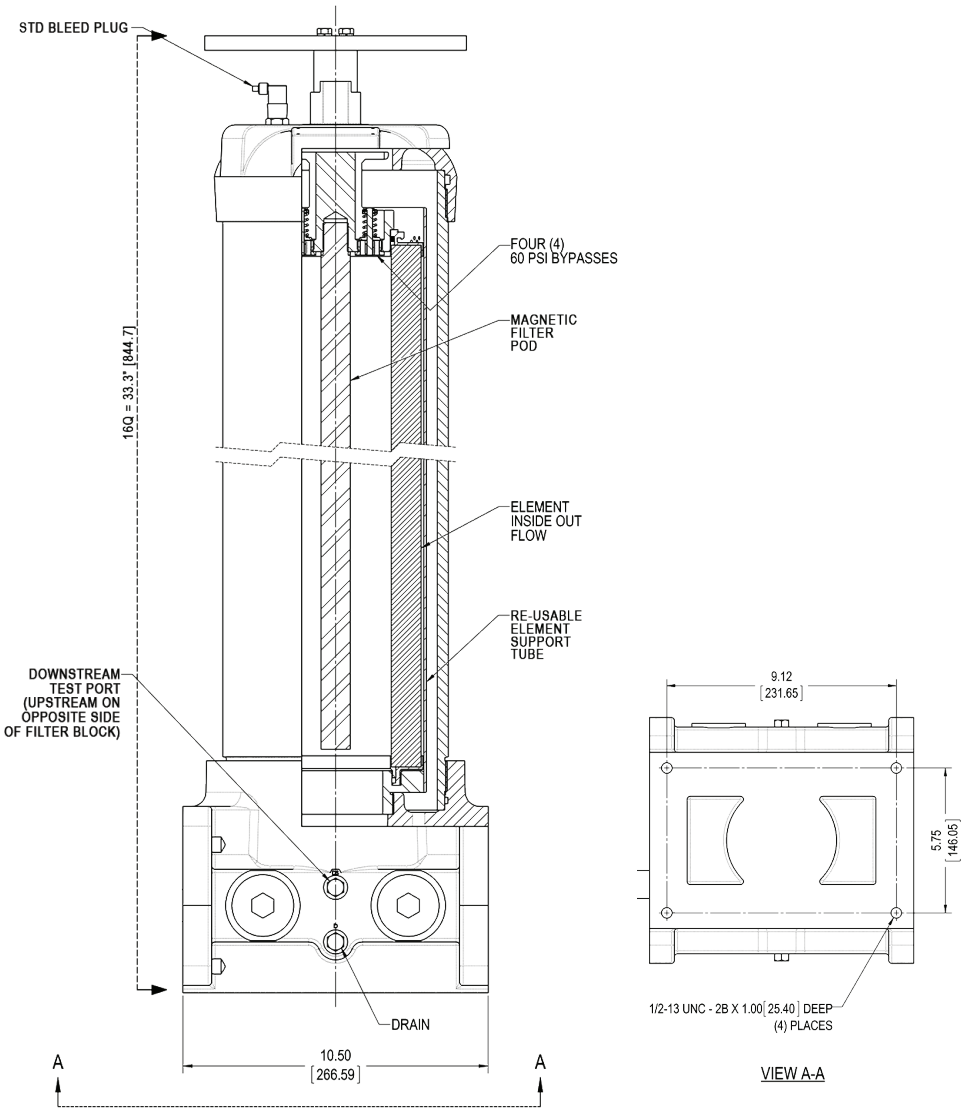

Metric dimensions in ( ).

Element Performance Information & Dirt Holding Capacity

	Element	Filtration Ratio Per ISO 4572/NFPA T3.10.8.8 Using automated particle counter (APC) calibrated per ISO 4402			Filtration Ratio per ISO 16889 Using APC calibrated per ISO 11171		Dirt Holding Capacity	
		$ß_x \geq 75$	$ß_x \geq 100$	$ß_x \geq 200$	$ß_x(c) \geq 200$	$ß_x(c) \geq 1000$	Element	DHC (gm)
16Q	CLIZ1	<1.0	<1.0	<1.0	<4.0	4.2	CLIZ1	307
	CLIZ3	<1.0	<1.0	<2.0	<4.0	4.8	CLIZ3	315
	CLIZ5	2.5	3.0	4.0	4.8	6.3	CLIZ5	364
	CLIZ10	7.4	8.2	10.0	8.0	10.0	CLIZ10	306
	CLIZ25	18.0	20.0	22.5	19.0	24.0	CLIZ25	278

Flow Direction: Inside-Out

Element Nominal Dimensions: 16QCLI: 6.0" (150 mm) O.D. x 17.81" (452 mm) long

Pressure Drop Information
Based on Flow Rate and Viscosity

$\Delta P_{housing}$

QF5i $\Delta P_{housing}$ for fluids with sp gr (specific gravity) = 0.86:

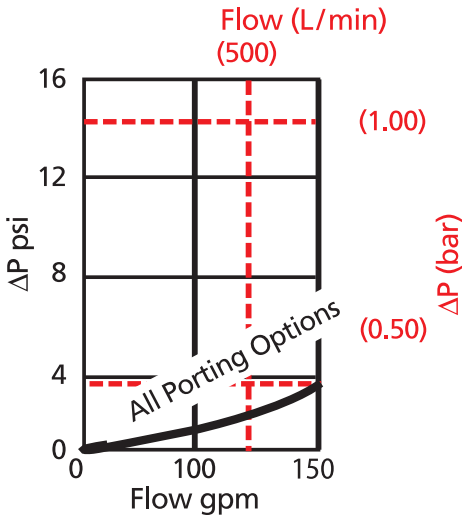

$\Delta P_{element}$

16QCLIZ

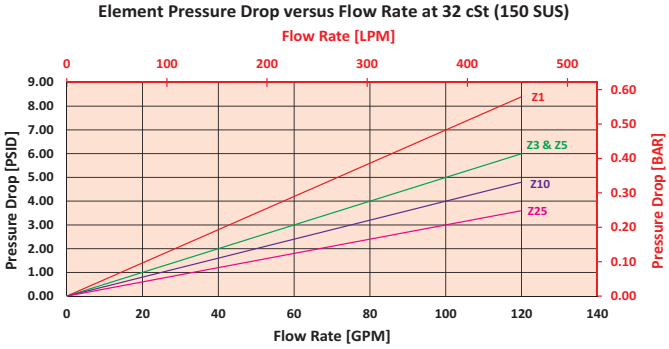

$$\Delta P_{filter} = \Delta P_{housing} + (\Delta P_{element} * V_f)$$

Exercise:

Determine ΔP_{filter} at 120 gpm (455 L/min) for QF5i16QCLIZ3P32 using 200 SUS (44 cSt) fluid.

Use the housing pressure curve to determine $\Delta P_{housing}$ at 120 gpm. In this case, $\Delta P_{housing}$ is 3 psi (.21 bar) on the graph for the QF5i housing.

Use the element pressure curve to determine $\Delta P_{element}$ at 120 gpm. In this case, $\Delta P_{element}$ is 6 psi (.415 bar) according to the graph for the 16QCLIZ3 element.

Because the viscosity in this sample is 200 SUS (44 cSt), we determine the Viscosity Factor (V_f) by dividing the Operating Fluid Viscosity with the Standard Viscosity of 150 SUS (32 cSt). To best determine your Operating Fluid Viscosity, please reference the chart in Appendix D.

Finally, the overall filter pressure differential, ΔP_{filter}, is calculated by adding $\Delta P_{housing}$ with the true element pressure differential, ($\Delta P_{element}$*V_f). The $\Delta P_{element}$ from the graph has to be multiplied by the viscosity factor to get the true pressure differential across the element.

Solution:

$\Delta P_{housing}$ = 3 psi [.21 bar] | $\Delta P_{element}$ = 6 psi [.415 bar]

V_f = 200 SUS (42.4 cSt) / 150 SUS (32 cSt) = 1.333

ΔP_{filter} = 3 psi + (6 psi * 1.333) = 11 psi

OR

ΔP_{filter} = .21 bar + (.415 bar * 1.333) = .76 bar

QF5i Cold Start Protection Inside-Out Flow Filter

Filter Model Number Selection

How to Build a Valid Model Number for a Schroeder QF5i:

BOX 1	BOX 2	BOX 3	BOX 4	BOX 5	BOX 6	BOX 7	BOX 8	BOX 9	BOX 10	BOX 11
QF5i –	–	–	–	–	–	–	–	–	–	–

BOX 1	BOX 2	BOX 3	BOX 4	BOX 5	BOX 6	BOX 7	BOX 8	BOX 9	BOX 10	BOX 11	
QF5i –	16 –	QCLI –	Z –	3 –	–	P32 –	60 –	M –	U –	DPG	=QF5i16QCLIZ3-P3260MUDPG

BOX 1 — Filter Series

QF5i

BOX 2 — Element Length (in)

16

BOX 3 — Element Style

QCLI

BOX 4 — Media Type

Z = Excellement® Z-Media® (synthetic)

BOX 5 — Micron Rating

1 = 1 µm Z-Media®
3 = 3 µm Z-Media®
5 = 5 µm Z-Media®
10 = 10 µm Z-Media®
25 = 25 µm Z-Media®

BOX 6 — Housing Seal Material

Omit = Buna N
V = Viton®

BOX 7 — Porting

P32 = 2"NPTF
P40 = 2½"NPTF
P48 = 3"NPTF
S32 = SAE-32
F32 = 2" SAE 4-bolt flange Code 61
F40 = 2½"SAE 4-bolt flange Code 61
F48 = 3" SAE 4-bolt flange Code 61

BOX 8 — Bypass Setting

60 = 60 psi cracking

BOX 9 — Magnet

Omit = No Magnet
M = Magnetic Filter Rod

BOX 10 — Test Points

Omit = No Test point
U = Test point in cap (upstream)
UU = Test points in block (upstream and downstream)

BOX 11 — Dirt Alarm® Options

	Omit =	None
Visual	DPG =	Standard differential pressure gauge
	D5 =	Visual pop-up
Visual with Thermal Lockout	D8 =	Visual w/ thermal lockout
Electrical	MS5 =	Electrical w/ 12 in. 18 gauge 4-conductor cable
	MS5LC =	Low current MS5
	MS10 =	Electrical w/ DIN connector (male end only)
	MS10LC =	Low current MS10
	MS11 =	Electrical w/ 12 ft. 4-conductor wire
	MS12 =	Electrical w/ 5 pin Brad Harrison connector (male end only)
	MS12LC =	Low current MS12
	MS16 =	Electrical w/ weather-packed sealed connector
	MS16LC =	Low current MS16
	MS17LC =	Electrical w/ 4 pin Brad Harrison male connector
Electrical with Thermal Lockout	MS5T =	MS5 (see above) w/ thermal lockout
	MS5LCT =	Low current MS5T
	MS10T =	MS10 (see above) w/ thermal lockout
	MS10LCT =	Low current MS10T
	MS12T =	MS12 (see above) w/ thermal lockout
	MS12LCT =	Low current MS12T
	MS16T =	MS16 (see above) w/ thermal lockout
	MS16LCT =	Low current MS16T
	MS17LCT =	Low current MS17T
Electrical Visual	MS13 =	Supplied w/ threaded connector & light
	MS14 =	Supplied w/ 5 pin Brad Harrison connector & light (male end)
Electrical Visual with Thermal Lockout	MS13DCT =	MS13 (see above), direct current, w/ thermal lockout
	MS13DCLCT =	Low current MS13DCT
	MS14DCT =	MS14 (see above), direct current, w/ thermal lockout
	MS14DCLCT =	Low current MS14DCT

NOTES:

Box 2. Replacement element part numbers are a combination of Boxes 2, 3, 4 and 5 plus the letter V.
Example: 16QCLIZ10V

Box 6. All elements for this filter are supplied with Viton® seals. Seal designation in Box 6 applies to housing only.
Viton® is a registered trademark of DuPont Dow Elastomers.

Features and Benefits

- Two or three QF5 filters supplied in series as a single filter assembly providing in-line single pass particulate and water filtration
- Element changeout from the top minimizes oil spillage
- Available with optional core assembly to accommodate coreless elements
- Offered with standard Q, QPML deep-plated and QCLQF coreless elements in 16" and 39" lengths with standard Viton® seals
- Offered in pipe, SAE straight thread, and flange porting
- Inlet and outlet test points
- Various Dirt Alarm® options

300 gpm
1135 L/min
500 psi
35 bar

Model No. of filter in photograph is 2QF539QEDBP40P40 and 3QF539QEDBP40P40

Filter Housing Specifications

Flow Rating:	Up to 300 gpm (1135 L/min) for 150 SUS (32 cSt) fluids
Max. Operating Pressure:	500 psi (35 bar)
Min. Yield Pressure:	2500 psi (172 bar), per NFPA T2.6.1-R1-2005
Rated Fatigue Pressure:	Contact Factory
Temp. Range:	-20°F to 225°F (-29°C to 107°C)
Bypass Setting:	Cracking: 30 psi (2.1 bar) Full Flow: 55 psi (3.8 bar)
Porting Base:	Cast Aluminum
Element Case:	Steel
Cap:	Ductile Iron
Element Change Clearance:	33.8" (859 mm)

Fluid Compatibility

Type Fluid	Appropriate Schroeder Media
Petroleum Based Fluids	All Z-Media® and ASP® media (synthetic)
High Water Content	All Z-Media® and ASP® media (synthetic)
Invert Emulsions	10 and 25 µ Z-Media® and 10 µ ASP® media (synthetic)
Water Glycols	3, 5, 10 and 25 µ Z-Media® and all ASP® Media (synthetic)
Phosphate Esters	All Z-Media® (synthetic) with H (EPR) seal designation and all ASP® media (synthetic)
Skydrol®	3, 5, 10 and 25 µ Z-Media® (synthetic) with H.5 seal designation (EPR seals and stainless steel wire mesh in element, and light oil coating on housing exterior) and all ASP® media (synthetic)

2QF5/3QF5 In-Line Filter

2QF5

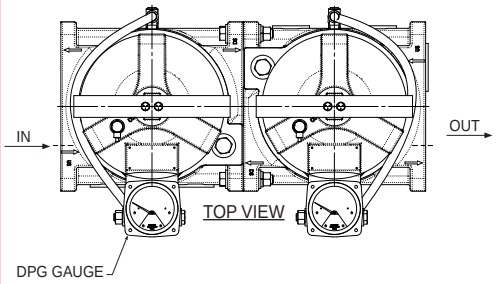

3QF5

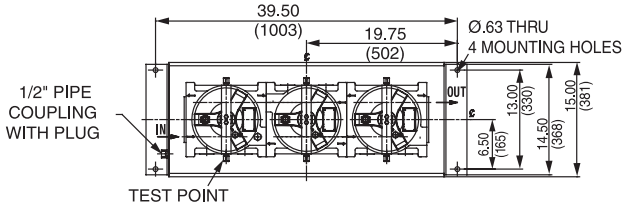

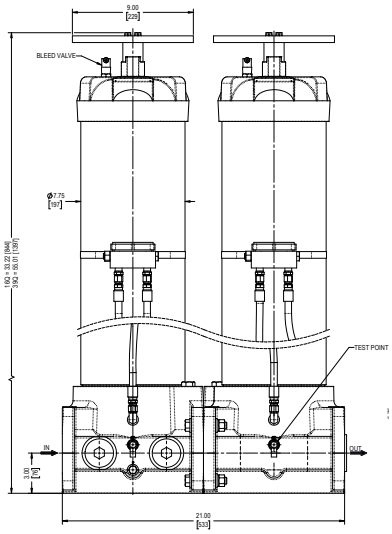

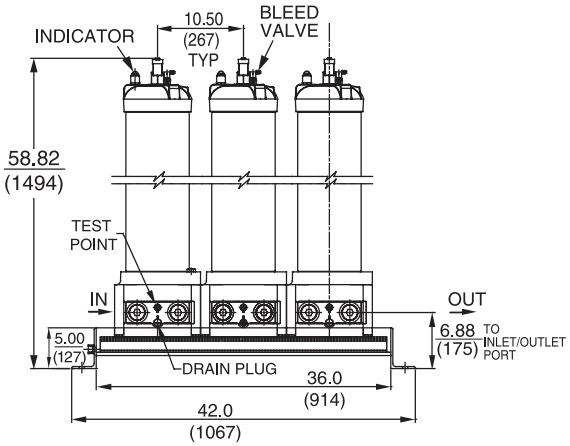

Metric dimensions in ( ).
Dimensions shown are inches (millimeters) for general information and overall envelope size only.
For complete dimensions please contact Schroeder Industries to request a certified print.

Element Performance Information & Dirt Holding Capacity

		Filtration Ratio Per ISO 4572/NFPA T3.10.8.8 Using automated particle counter (APC) calibrated per ISO 4402			Filtration Ratio per ISO 16889 Using APC calibrated per ISO 11171	
Element		$ß_x \geq 75$	$ß_x \geq 100$	$ß_x \geq 200$	$ß_x(c) \geq 200$	$ß_x(c) \geq 1000$
39Q	Z1/CLQFZ1/PMLZ1	<1.0	<1.0	<1.0	<4.0	4.2
	Z3/CLQFZ3/PMLZ3	<1.0	<1.0	<2.0	<4.0	4.8
	Z5/CLQFZ5/PMLZ5	2.5	3.0	4.0	4.8	6.3
	Z10/CLQFZ10/PMLZ10	7.4	8.2	10.0	8.0	10.0
	Z25/CLQFZ25/PMLZ25	18.0	20.0	22.5	19.0	24.0

	Element	DHC (gm)	Element	DHC (gm)	Element	DHC (gm)
39Q	Z1	974	CLQFZ1	1259	PMLZ1	1485
	Z3	1001	CLQFZ3	1293	PMLZ3	1525
	Z5	954	CLQFZ5	1302	PMLZ5	1235
	Z10	940	CLQFZ10	1214	PMLZ10	1432
	Z25	853	CLQFZ25	1102	PMLZ25	1299

Element Collapse Rating: Q and QPML: 150 psid (10 bar), QCLQF: 100 psid (7 bar)

Flow Direction: Outside In

Element Nominal Dimensions:
39Q: 6.0" (150 mm) O.D. x 38.70" (985 mm) long
39QCLQF: 6.0" (150 mm) O.D. x 40.01" (1016 mm) long
39QPML: 6.0" (150 mm) O.D. x 37.80" (960 mm) long

Pressure Drop Information

Based on Flow Rate and Viscosity

$\Delta P_{housing}$

2QF5/3QF5 $\Delta P_{housing}$ for fluids with sp gr (specific gravity) = 0.86:

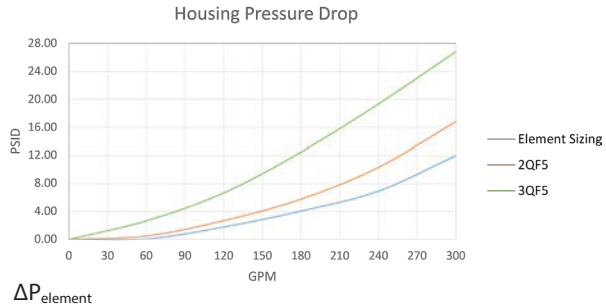

For each individual housing pressure, place the singular QF5 housing pressure curve indicated here

$\Delta P_{element}$

16QCLQF

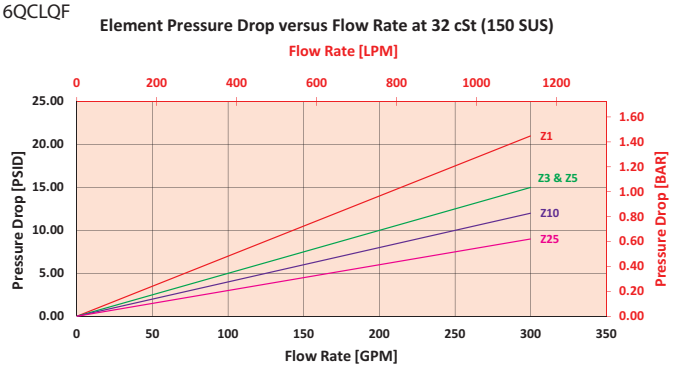

39QCLQF

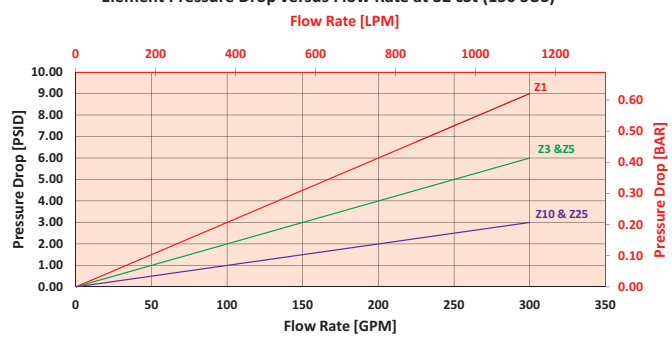

$$\Delta P_{filter} = \Delta P_{housing} + (\Delta P_{element} * V_f)$$

Exercise:

Determine ΔP_{filter} at 100 gpm (379 L/min) for 3QF539QEDBVP32P3250DPG using 160 SUS (34 cSt) fluid.

Use the housing pressure curve to determine $\Delta P_{housing}$ at 100 gpm. In this case, $\Delta P_{housing}$ is 5.5 psi (.39 bar) on the graph for the 3QF5 housing.

Use the element pressure curve to determine $\Delta P_{element}$ at 100 gpm for the first element. In this case, $\Delta P_{element}$ is 1 psi (.07 bar) according to the graph for the 39QZ25 element.

Use the element pressure curve to determine $\Delta P_{element^2}$ at 100 gpm for the first element. In this case, $\Delta P_{element}$ is 1 psi (.07 bar) according to the graph for the 39QZ10 element.

Use the element pressure curve to determine $\Delta P_{element^3}$ at 100 gpm for the first element. In this case, $\Delta P_{element}$ is 1 psi (.07 bar) according to the graph for the 39QZ3 element.

Because the viscosity in this sample is 160 SUS (34 cSt), we determine the Viscosity Factor (V_f) by dividing the Operating Fluid Viscosity with the Standard Viscosity of 150 SUS (32 cSt). To best determine your Operating Fluid Viscosity, please reference the chart in Appendix D.

Finally, the overall filter pressure differential, ΔP_{filter}, is calculated by adding $\Delta P_{housing}$ with the true element pressure differential, ($\Delta P_{element} * V_f$). The $\Delta P_{element}$ from the graph has to be multiplied by the viscosity factor to get the true pressure differential across the element.

Solution:

$\Delta P_{housing}$ = 5.5 psi [.39 bar] | $\Delta P_{element^1}$ = 1 psi [.07 bar] | $\Delta P_{element^2}$ = 1 psi [.07 bar] | $\Delta P_{element^3}$ = 1 psi [.07 bar]

V_f = 160 SUS (34 cSt) / 150 SUS (32 cSt) = 1.1

ΔP_{filter} = 5.5 psi + (1 psi * 1.1) + (1 psi * 1.1) + (1 psi * 1.1) = 8.8 psi

OR

ΔP_{filter} = .39 bar + (.07 bar * 1.1) + (.07 * 1.1) + (.07 * 1.1) = .62 bar

Note:
If your element is not graphed, use the following equation:
$\Delta P_{element}$ = Flow Rate x ΔP_f. Plug this variable into the overall pressure drop equation.

Ele.	ΔP	Ele.	ΔP	Ele.	ΔP
16QAS3V	0.04	16QPMLZ1	0.08	39QZ1	0.03
16QAS5V	0.04	16QPMLZ3	0.05	39QZ3	0.01
16QAS10V	0.03	16QPMLZ5	0.05	39QZ5	0.01
16QPML-AS3V	0.05	16QPMLZ10	0.04	39QZ10	0.01
16QPML-AS5V	0.05	16QPMLZ25	0.02	39QZ25	0.01
16QPML-AS10V	0.04	39QAS3V	0.01	39QPMLZ1	0.03
16QZ1	0.09	39QAS5V	0.01	39QPMLZ3	0.02
16QZ3	0.04	39QAS10V	0.01	39QPMLZ5	0.02
16QZ5	0.04	39QPMLAS-3V	0.02	39QPMLZ10	0.01
16QZ10	0.03	39QPMLAS-5V	0.02	39QPMLZ25	0.01
16QZ25	0.01	39QPMLAS-10V	0.01		

In-Line Filter

Filter Model Number Selection

How to Build a Valid Model Number for a Schroeder 2QF5:

BOX 1	BOX 2	BOX 3	BOX 4	BOX 5	BOX 6	BOX 7	BOX 8	BOX 9	BOX 10	BOX 11	BOX 12
2QF5 –	–	–	–	–	–	–	–	–	–	–	–

Example: NOTE: One option per box

BOX 1	BOX 2	BOX 3	BOX 4	BOX 5	BOX 6	BOX 7	BOX 8	BOX 9	BOX 10	BOX 11	BOX 12	
2QF5 –	39 –	Q –	D –	D –	–	V –	P32 –	P32 –	X –	U –	DPG	= 2QF539QDDVP32P32XUDPG

BOX 1 – Filter Series

Filter Series
2QF5
3QF5

BOX 2 – Element Length (in)

Element Length (in)
16
39

BOX 3 – Element Style

Element Style
Q
QCLQF
QPML

BOX 4 – 1st Housing Element Media

1st Housing Element Media
A = Z1
B = Z3
C = Z5
D = Z10
E = Z25
F = W
G = AS3
H = AS5
J = AS10

BOX 5 – 2nd Housing Element Media (2QF5 & 3QF5)

2nd Housing Element Media (2QF5 & 3QF5)
A = Z1
B = Z3
C = Z5
D = Z10
E = Z25
F = W
G = AS3
H = AS5
J = AS10

BOX 6 – 3rd Housing Element Media (3QF5 only)

3rd Housing Element Media (3QF5 only)
A = Z1
B = Z3
C = Z5
D = Z10
E = Z25
F = W
G = AS3
H = AS5
J = AS10

BOX 7 – Housing Seal Material

Housing Seal Material
Omit = Buna N
H = EPR
V = Viton®

BOX 8 – "IN" Porting

"IN" Porting
P32 = 2"NPTF
P40 = 2½"NPTF
P48 = 3"NPTF
S32 = SAE-32
F32 = 2"SAE 4-bolt flange Code 61
F40 = 2½"SAE 4-bolt flange Code 61
F48 = 3"SAE 4-bolt flange Code 61

BOX 9 – "OUT" Porting

"OUT" Porting
P32 = 2"NPTF
P40 = 2½"NPTF
P48 = 3"NPTF
S32 = SAE-32
F32 = 2"SAE 4-bolt flange Code 61
F40 = 2½"SAE 4-bolt flange Code 61
F48 = 3"SAE 4-bolt flange Code 61

BOX 10 – Bypass Setting

Bypass Setting
Omit = 30 psi cracking
50 = 50 psi cracking
X = Blocked bypass

BOX 11 – Test Points

Test Points
Omit = None
U = Test point in cap (upstream)

BOX 12 – Dirt Alarm® Options

None	Omit =	None
Visual	DPG =	Standard differential pressure gauge
	D5 =	Visual pop-up
	D5C =	D5 in cap
	D5R =	D5 mounted opposite standard location
Visual with Thermal Lockout	D8 =	Visual w/ thermal lockout
	D8C =	D8 in cap
	D8R =	D8 mounted opposite standard location
Electrical	MS5 =	Electrical w/ 12 in. 18 gauge 4-conductor cable
	MS5LC =	Low current MS5
	MS10 =	Electrical w/ DIN connector (male end only)
	MS10LC =	Low current MS10
	MS11 =	Electrical w/ 12 ft. 4-conductor wire
	MS12 =	Electrical w/ 5 pin Brad Harrison connector (male end only)
	MS12LC =	Low current MS12
	MS16 =	Electrical w/ weather-packed sealed connector
	MS16LC =	Low current MS16
	MS17LC =	Electrical w/ 4 pin Brad Harrison male connector
Electrical with Thermal Lockout	MS5T =	MS5 (see above) w/ thermal lockout
	MS5LCT =	Low current MS5T
	MS10T =	MS10 (see above) w/ thermal lockout
	MS10LCT =	Low current MS10T
	MS12T =	MS12 (see above) w/ thermal lockout
	MS12LCT =	Low current MS12T
	MS16T =	MS16 (see above) w/ thermal lockout
	MS16LCT =	Low current MS16T
	MS17LCT =	Low current MS17T
Electrical Visual	MS13 =	Supplied w/ threaded connector & light
	MS14 =	Supplied w/ 5 pin Brad Harrison connector & light (male end)
Electrical Visual with Thermal Lockout	MS13DCT =	MS13 (see above), direct current, w/ thermal lockout
	MS13DCLCT =	Low current MS13DCT
	MS14DCT =	MS14 (see above), direct current, w/ thermal lockout
	MS14DCLCT =	Low current MS14DCT

NOTES:

Box 2. Replacement element part numbers are a combination of Boxes 2, 3, and 4, plus the letter V. Example: 39QZ10V

Box 3. QCLQF are CoreCentric® coreless elements – housing includes rigid metal core. QPML are deep-pleated elements with more media and higher dirt holding capacity.

Box 4. For option F, Box 3 must equal Q.

Box 7. All elements for this filter are supplied with Viton® seals. Seal designation in Box 5 applies to housing only. Viton® is a registered trademark of DuPont Dow Elastomers.

Boc 10. When X is paired with a standard filter series, a standard bushing and spring plate will be used.

Model No. of filter in photograph is QFD516QZ10F48DPG.

Features and Benefits

- Duplex filter design
- Approved for API 5L use
- Element changeout from the top minimizes oil spillage
- Available with optional core assembly to accommodate coreless elements
- Offered with standard Q, QPML deep-pleated and QCLQF coreless elements in 16" and 39" lengths with Viton® seals as the standard
- Offered in 2" and 3" SAE J518 4-bolt flange Code 61 and ANSI 300# flange porting
- Integral inlet and outlet test points are standard on all models
- Various Dirt Alarm® options
- Also available in 4, 6 or 8 housing modular designs (contact factory)

350 gpm
1325 L/min
500 psi
35 bar

Filter Housing Specifications

Flow Rating:	Up to 175 gpm (675 L/min) for 2"; 350 gpm (1325 L/min) for 3" for 150 SUS (32 cSt) fluids
Max. Operating Pressure:	500 psi (35 bar)
Min. Yield Pressure:	Contact Factory
Rated Fatigue Pressure:	Contact Factory
Temp. Range:	-15°F to 200°F (-26°C to 93°C)
Bypass Setting:	Cracking: 30 psi (2.1 bar) Full Flow: 33 psi (2.3 bar) for 2"; 38 psi (2.6 bar) for 3"
Porting Base & Cap:	Ductile Iron
Element Case & Transfer Valve:	Steel
Weight of QFD5-16Q:	410.0 lbs. (186.0 kg) for 2"; 455.0 (206.0 kg) for 3"
Weight of QFD5-39Q:	562.0 lbs. (255.0 kg) for 2"; 607.0 (275.0 kg) for 3"
Element Change Clearance:	16Q 12.00" (305 mm) 39Q 33.80" (859 mm)

Fluid Compatibility

Type Fluid	Appropriate Schroeder Media
Petroleum Based Fluids	All E media (cellulose), Z-Media® and ASP® media (synthetic)
High Water Content	All Z-Media® and ASP® media (synthetic)
Invert Emulsions	10 and 25 µ Z-Media® and 10 µ ASP® media (synthetic)
Water Glycols	3, 5, 10 and 25 µ Z-Media® and all ASP® media (synthetic)
Phosphate Esters	All Z-Media® (synthetic) with H (EPR) seal designation and all ASP® media (synthetic)

QFD5 In-Line Filter

PORT SIZE	DIM A	DIM B	DIM C	DIM D	DIM E 16Q	DIM E 39Q
2" Ports	4.00 (101.6)	8.19 (208.0)	10.75 (273.1)	4.80 (121.9)	36.50 (927)	58.31 (1481)
3" Ports	5.1 (130.2)	11.07 (281.1)	13.63 (346.1)	7.00 (177.8)	39.38 (1000)	61.19 (1559)

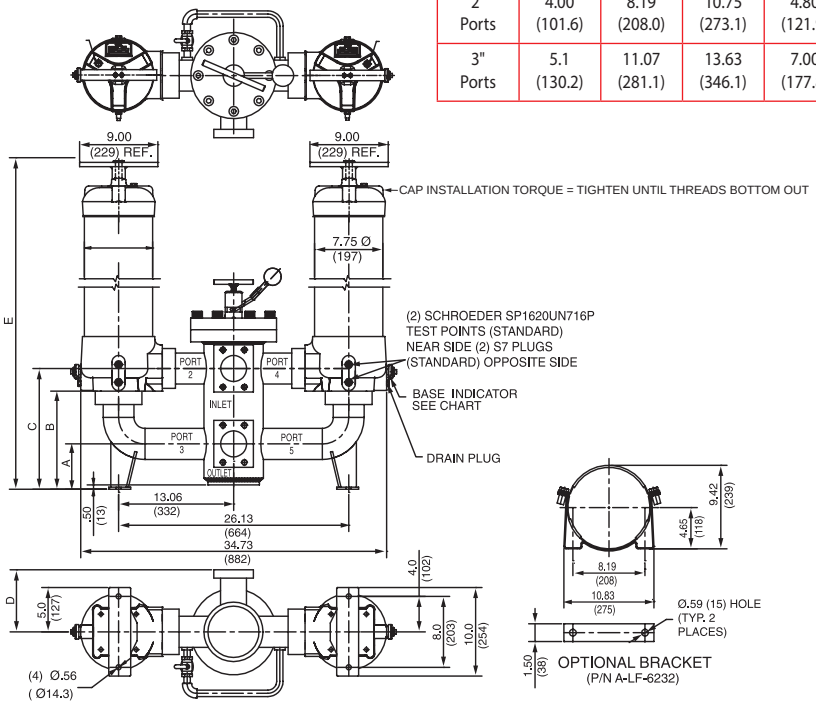

Metric dimensions in ( ).

Element Performance Information & Dirt Holding Capacity

	Element	Filtration Ratio Per ISO 4572/NFPA T3.10.8.8 Using automated particle counter (APC) calibrated per ISO 4402			Filtration Ratio per ISO 16889 Using APC calibrated per ISO 11171	
		$ß_x \geq 75$	$ß_x \geq 100$	$ß_x \geq 200$	$ß_x(c) \geq 200$	$ß_x(c) \geq 1000$
16Q	Z1/CLQFZ1/PMLZ1	<1.0	<1.0	<1.0	<4.0	4.2
	Z3/CLQFZ3/PMLZ3	<1.0	<1.0	<2.0	<4.0	4.8
	Z5/CLQFZ5/PMLZ5	2.5	3.0	4.0	4.8	6.3
	Z10/CLQFZ10/PMLZ10	7.4	8.2	10.0	8.0	10.0
	Z25/CLQFZ25/PMLZ25	18.0	20.0	22.5	19.0	24.0
39Q	Z1/CLQFZ1/PMLZ1	<1.0	<1.0	<1.0	<4.0	4.2
	Z3/CLQFZ3/PMLZ3	<1.0	<1.0	<2.0	<4.0	4.8
	Z5/CLQFZ5/PMLZ5	2.5	3.0	4.0	4.8	6.3
	Z10/CLQFZ10/PMLZ10	7.4	8.2	10.0	8.0	10.0
	Z25/CLQFZ25/PMLZ25	18.0	20.0	22.5	19.0	24.0

	Element	DHC (gm)	Element	DHC (gm)	Element	DHC (gm)
16Q	Z1	276	CLQFZ1	307	PMLZ1	307
	Z3	283	CLQFZ3	315	PMLZ3	315
	Z5	351	CLQFZ5	364	PMLZ5	364
	Z10	280	CLQFZ10	306	PMLZ10	330
	Z25	254	CLQFZ25	278	PMLZ25	299
39Q	Z1	974	CLQFZ1	1259	PMLZ1	1485
	Z3	1001	CLQFZ3	1293	PMLZ3	1525
	Z5	954	CLQFZ5	1302	PMLZ5	1235
	Z10	940	CLQFZ10	1214	PMLZ10	1432
	Z25	853	CLQFZ25	1102	PMLZ25	1299

Element Collapse Rating: Q and QPML: 150 psid (10 bar), QCLQF: 100 psid (7 bar)

Flow Direction: Outside In

Element Nominal Dimensions:
39Q: 6.0" (150 mm) O.D. x 38.70" (985 mm) long
39QCLQF: 6.0" (150 mm) O.D. x 40.01" (1016 mm) long
39QPML: 6.0" (150 mm) O.D. x 37.80" (960 mm) long

Pressure Drop Information

Based on Flow Rate and Viscosity

$\Delta P_{housing}$

QFD5 $\Delta P_{housing}$ for fluids with sp gr (specific gravity) = 0.86:

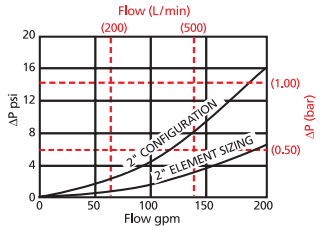

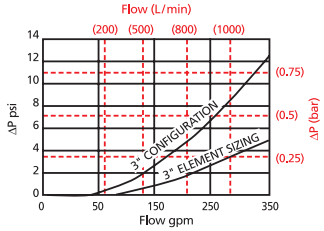

$\Delta P_{element}$

16QCLQFZ

Element Pressure Drop versus Flow Rate at 32 cSt (150 SUS)

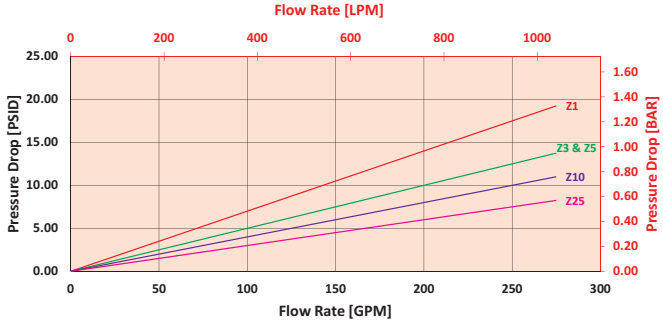

39QCLQFZ

Element Pressure Drop versus Flow Rate at 32 cSt (150 SUS)

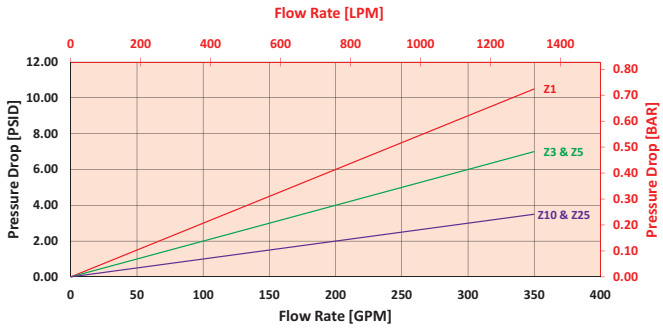

$$\Delta P_{filter} = \Delta P_{housing} + (\Delta P_{element} * V_f)$$

Exercise:

Determine ΔP_{filter} at 200 gpm (758 L/min) for QFD516QZ3F48D5C using 100 SUS (21.3 cSt) fluid.

Use the housing pressure curve to determine $\Delta P_{housing}$ at 200 gpm. In this case, $\Delta P_{housing}$ is 5 psi (.34 bar) on the graph for the QFD5 housing.

Use the element pressure curve to determine $\Delta P_{element}$ at 200 gpm. In this case, $\Delta P_{element}$ is 7 psi (.48 bar) according to the graph for the 16QCZ3 element.

Because the viscosity in this sample is 100 SUS (21.3 cSt), we determine the Viscosity Factor (V_f) by dividing the Operating Fluid Viscosity with the Standard Viscosity of 150 SUS (32 cSt). To best determine your Operating Fluid Viscosity, please reference the chart in Appendix D.

Finally, the overall filter pressure differential, ΔP_{filter}, is calculated by adding $\Delta P_{housing}$ with the true element pressure differential, ($\Delta P_{element}$*V_f). The $\Delta P_{element}$ from the graph has to be multiplied by the viscosity factor to get the true pressure differential across the element.

Solution:

$\Delta P_{housing}$ = 5 psi [.34 bar] | $\Delta P_{element}$ = 7 psi [.48 bar]

V_f = 100 SUS (21.3 cSt) / 150 SUS (32 cSt) = .67

ΔP_{filter} = 5 psi + (7 psi * .67) = 9.7 psi

OR

ΔP_{filter} = .34 bar + (.48 bar * .67) = .66 bar

Note:
If your element is not graphed, use the following equation:
$\Delta P_{element}$ = Flow Rate x ΔP_f. Plug this variable into the overall pressure drop equation.

Ele.	ΔP	Ele.	ΔP	Ele.	ΔP
16QAS3V	0.04	16QPMLZ1	0.08	39QZ1	0.03
16QAS5V	0.04	16QPMLZ3	0.05	39QZ3	0.01
16QAS10V	0.03	16QPMLZ5	0.05	39QZ5	0.01
16QPML-AS3V	0.05	16QPMLZ10	0.04	39QZ10	0.01
16QPML-AS5V	0.05	16QPMLZ25	0.02	39QZ25	0.01
16QPML-AS10V	0.04	39QAS3V	0.01	39QPMLZ1	0.03
16QZ1	0.09	39QAS5V	0.01	39QPMLZ3	0.02
16QZ3	0.04	39QAS10V	0.01	39QPMLZ5	0.02
16QZ5	0.04	39QPMLAS-3V	0.02	39QPMLZ10	0.01
16QZ10	0.03	39QPMLAS-5V	0.02	39QPMLZ25	0.01
16QZ25	0.01	39QPMLAS-10V	0.01		

QFD5 In-Line Filter

Filter Model Number Selection

How to Build a Valid Model Number for a Schroeder QF5:

BOX 1	BOX 2	BOX 3	BOX 4	BOX 5	BOX 6	BOX 7	BOX 8	BOX 9	BOX 10
QFD5 –	–	–	–	–	–	–	–	–	–

BOX 1	BOX 2	BOX 3	BOX 4	BOX 5	BOX 6	BOX 7	BOX 8	BOX 9	
QFD5 –	16 –	Q –	Z –	3 –	–	F48 –	–	D5C –	=QFD516QZ3F48D5C

BOX 1

Filter Series
QFD5

BOX 2

Element Length (in)
16
39

BOX 3

Element Style
Q
QCLQF
QPML

BOX 4

Media Type
Z = Excellement® Z-Media® (synthetic)
AS = Anti-Stat Pleat media (synthetic)
W = W media (water removal)

BOX 5

Micron Rating
1 = 1 µm Z-Media®
3 = 3 µm Z-Media®
5 = 5 µm Z-Media®
10 = 10 µm Z-Media®
25 = 25 µm Z-Media®

BOX 6

Housing Seal Material
Omit = Buna N
V = Viton®

BOX 7

Porting	
F32	= 2" SAE 4-bolt flange Code 61
F32M	= 2" SAE 4-bolt flange Code 61
FA32	= 2" ANSI 300# flange
F48	= 3" SAE 4-bolt flange Code 61
F48M	= 3" SAE 4-bolt flange Code 61
FA48	= 3" ANSI 300# flange

BOX 8

Bypass Setting
Omit = 30 psi cracking
50 = 50 psi cracking
X = Blocked bypass

BOX 9

Dirt Alarm® Options		
	Omit =	None
Visual	DPG =	Standard differential pressure gauge
	D5 =	Visual pop-up
	D5C =	D5 in cap
Visual with Thermal Lockout	D8 =	Visual w/ thermal lockout
	D8C =	D8 in cap
Electrical	MS5 =	Electrical w/ 12 in. 18 gauge 4-conductor cable
	MS5LC =	Low current MS5
	MS10 =	Electrical w/ DIN connector (male end only)
	MS10LC =	Low current MS10
	MS11 =	Electrical w/ 12 ft. 4-conductor wire
	MS12 =	Electrical w/ 5 pin Brad Harrison connector (male end only)
	MS12LC =	Low current MS12
	MS16 =	Electrical w/ weather-packed sealed connector
	MS16LC =	Low current MS16
	MS17LC =	Electrical w/ 4 pin Brad Harrison male connector
Electrical with Thermal Lockout	MS5T =	MS5 (see above) w/ thermal lockout
	MS5LCT =	Low current MS5T
	MS10T =	MS10 (see above) w/ thermal lockout
	MS10LCT =	Low current MS10T
	MS12T =	MS12 (see above) w/ thermal lockout
	MS12LCT =	Low current MS12T
	MS16T =	MS16 (see above) w/ thermal lockout
	MS16LCT =	Low current MS16T
	MS17LCT =	Low current MS17T
Electrical Visual	MS13 =	Supplied w/ threaded connector & light
	MS14 =	Supplied w/ 5 pin Brad Harrison connector & light (male end)
Electrical Visual with Thermal Lockout	MS13DCT =	MS13 (see above), direct current, w/ thermal lockout
	MS13DCLCT =	Low current MS13DCT
	MS14DCT =	MS14 (see above), direct current, w/ thermal lockout
	MS14DCLCT =	Low current MS14DCT

NOTES:

Box 2. Replacement element part numbers are a combination of Boxes 2, 3, 4 and 5 plus the letter V.
Example: 39QZ10V

Box 3. QCLQF are CoreCentric® coreless elements – housing includes rigid metal core. QPML are deep-pleated elements with more media and higher dirt holding capacity.

Box 4. For option W, Box 3 must equal Q.

Box 6. All elements for this filter are supplied with Viton® seals. Seal designation in Box 6 applies to housing only. Viton® is a registered trademark of DuPont Dow Elastomers.

Box 8. When X is paired with a standard filter series, a standard bushing and spring plate will be used.

Model No. of filter in photograph is QF1516QZ10P24MS10AC.

Features and Benefits

- Also available in L-ported version
- Element changeout from the top minimizes oil spillage
- Available with optional core assembly to accommodate coreless elements
- Offered with standard Q, QPML deep-pleated and QCLQF coreless elements in 16" and 39" lengths with Viton® seals as the standard
- Offered in pipe, SAE straight thread, and flange porting
- Integral inlet and outlet test points are standard on all models
- Various Dirt Alarm® options

450 gpm
1700 L/min
1500 psi
100 bar

Filter Housing Specifications

Flow Rating:	Up to 450 gpm (1700 L/min) for 150 SUS (32 cSt) fluids
Max. Operating Pressure:	1500 psi (100 bar)
Min. Yield Pressure:	4900 psi (340 bar), per NFPA T2.6.1
Rated Fatigue Pressure:	800 psi (55 bar), per NFPA T2.6.1-R1-2005
Temp. Range:	-20°F to 225°F (-29°C to 107°C)
Bypass Setting:	Cracking: 30 psi (2.1 bar) Full Flow: 55 psi (3.8 bar)
Porting Base & Cap:	Ductile Iron
Element Case:	Steel
Weight of QF15-16Q:	139.0 lbs. (63.0 kg)
Weight of QF15-39Q:	198.0 lbs. (90.0 kg)
Element Change Clearance:	16Q 12.0" (305 mm) 39Q 33.8" (859 mm)

Fluid Compatibility

Type Fluid	Appropriate Schroeder Media
Petroleum Based Fluids	All E media (cellulose), Z-Media® and ASP® Media (synthetic)
High Water Content	All Z-Media® and ASP® media (synthetic)
Invert Emulsions	10 and 25 µ Z-Media® and 10 µ ASP® media (synthetic)
Water Glycols	3, 5, 10 and 25 µ Z-Media® and all ASP® media (synthetic)
Phosphate Esters	All Z-Media® (synthetic) with H (EPR) seal designation and all ASP® media (synthetic)

QF15 In-Line Filter

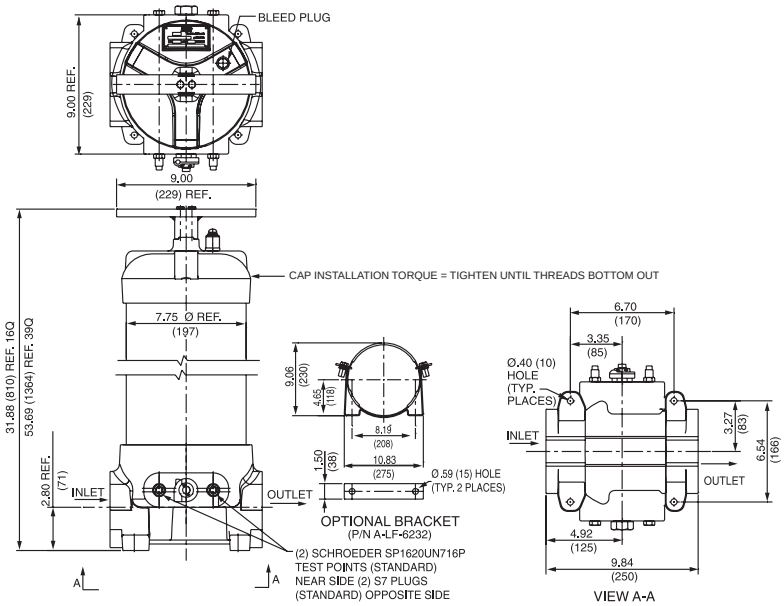

Metric dimensions in ( ).

Element Performance Information & Dirt Holding Capacity

	Element	Filtration Ratio Per ISO 4572/NFPA T3.10.8.8 Using automated particle counter (APC) calibrated per ISO 4402			Filtration Ratio per ISO 16889 Using APC calibrated per ISO 11171	
		$ß_x \geq 75$	$ß_x \geq 100$	$ß_x \geq 200$	$ß_x(c) \geq 200$	$ß_x(c) \geq 1000$
16Q	Z1/CLQFZ1/PMLZ1	<1.0	<1.0	<1.0	<4.0	4.2
	Z3/CLQFZ3/PMLZ3	<1.0	<1.0	<2.0	<4.0	4.8
	Z5/CLQFZ5/PMLZ5	2.5	3.0	4.0	4.8	6.3
	Z10/CLQFZ10/PMLZ10	7.4	8.2	10.0	8.0	10.0
	Z25/CLQFZ25/PMLZ25	18.0	20.0	22.5	19.0	24.0
39Q	Z1/CLQFZ1/PMLZ1	<1.0	<1.0	<1.0	<4.0	4.2
	Z3/CLQFZ3/PMLZ3	<1.0	<1.0	<2.0	<4.0	4.8
	Z5/CLQFZ5/PMLZ5	2.5	3.0	4.0	4.8	6.3
	Z10/CLQFZ10/PMLZ10	7.4	8.2	10.0	8.0	10.0
	Z25/CLQFZ25/PMLZ25	18.0	20.0	22.5	19.0	24.0

	Element	DHC (gm)	Element	DHC (gm)	Element	DHC (gm)
16Q	Z1	276	CLQFZ1	307	PMLZ1	307
	Z3/AS3V	283	CLQFZ3	315	PMLZ3/PMLAS3V	315
	Z5/AS5V	351	CLQFZ5	364	PMLZ5/PMLAS5V	364
	Z10/AS10V	280	CLQFZ10	306	PMLZ10/PMLAS10V	330
	Z25	254	CLQFZ25	278	PMLZ25	299
39Q	Z1	974	CLQFZ1	1259	PMLZ1	1485
	Z3/AS3V	1001	CLQFZ3	1293	PMLZ3/PMLAS3V	1525
	Z5/AS5V	954	CLQFZ5	1302	PMLZ5/PMLAS5V	1235
	Z10/AS10V	940	CLQFZ10	1214	PMLZ10/PMLAS10V	1432
	Z25	853	CLQFZ25	1102	PMLZ25	1299

Element Collapse Rating: Q and QPML: 150 psid (10 bar), QCLQF: 100 psid (7 bar)

Flow Direction: Outside In

Element Nominal Dimensions:

16Q:	6.0" (150 mm) O.D. x 16.85" (430 mm) long
16QCLQF:	6.0" (150 mm) O.D. x 18.21" (463 mm) long
16QPML:	6.0" (150 mm) O.D. x 16.00" (405 mm) long
39Q:	6.0" (150 mm) O.D. x 38.70" (985 mm) long
39QCLQF:	6.0" (150 mm) O.D. x 40.01" (1016 mm) long
39QPML:	6.0" (150 mm) O.D. x 37.80" (960 mm) long

Pressure Drop Information

Based on Flow Rate and Viscosity

$\Delta P_{housing}$

QF15 $\Delta P_{housing}$ for fluids with sp gr (specific gravity) = 0.86:

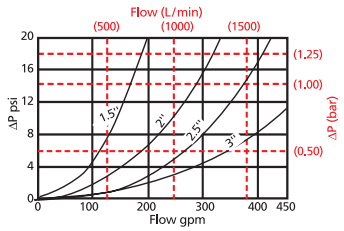

$\Delta P_{element}$

16QCLQFZ

Element Pressure Drop versus Flow Rate at 32 cSt (150 SUS)

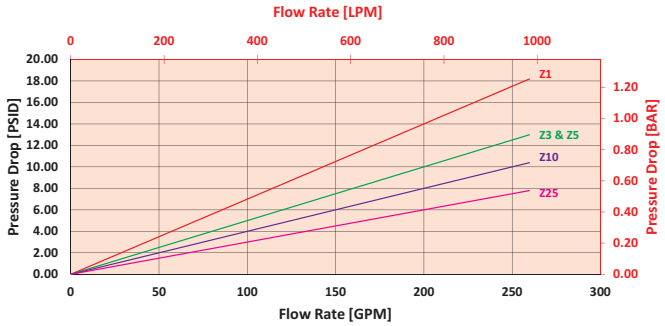

39QCLQFZ

Element Pressure Drop versus Flow Rate at 32 cSt (150 SUS)

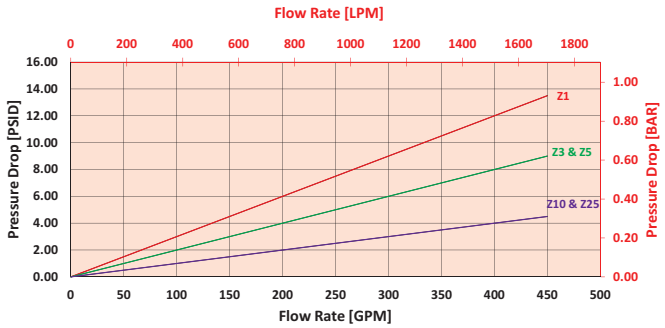

$$\Delta P_{filter} = \Delta P_{housing} + (\Delta P_{element} * V_f)$$

Exercise:

Determine ΔP_{filter} at 200 gpm (758 L/min) for QF1516QZ3D5C using 100 SUS (21.3 cSt) fluid.

Use the housing pressure curve to determine $\Delta P_{housing}$ at 200 gpm. In this case, $\Delta P_{housing}$ is 2 psi (.14 bar) on the graph for the QF15 housing.

Use the element pressure curve to determine $\Delta P_{element}$ at 200 gpm. In this case, $\Delta P_{element}$ is 7 psi (.48 bar) according to the graph for the 16QZ3 element.

Because the viscosity in this sample is 100 SUS (21.3 cSt), we determine the Viscosity Factor (V_f) by dividing the Operating Fluid Viscosity with the Standard Viscosity of 150 SUS (32 cSt). To best determine your Operating Fluid Viscosity, please reference the chart in Appendix D.

Finally, the overall filter pressure differential, ΔP_{filter}, is calculated by adding $\Delta P_{housing}$ with the true element pressure differential, ($\Delta P_{element}$*V_f). The $\Delta P_{element}$ from the graph has to be multiplied by the viscosity factor to get the true pressure differential across the element.

Solution:

$\Delta P_{housing}$ = 3 psi [.14 bar] | $\Delta P_{element}$ = 7 psi [.48 bar]

V_f = 100 SUS (21.3 cSt) / 150 SUS (32 cSt) = .67

ΔP_{filter} = 2 psi + (7 psi * .67) = 6.7 psi

OR

ΔP_{filter} = .14 bar + (.48 bar * .67) = .46 bar

Note:
If your element is not graphed, use the following equation:
$\Delta P_{element}$ = Flow Rate x ΔP_f. Plug this variable into the overall pressure drop equation.

Ele.	ΔP	Ele.	ΔP	Ele.	ΔP
16QAS3V	0.04	16QPMLZ1	0.08	39QZ1	0.03
16QAS5V	0.04	16QPMLZ3	0.05	39QZ3	0.01
16QAS10V	0.03	16QPMLZ5	0.05	39QZ5	0.01
16QPML-AS3V	0.05	16QPMLZ10	0.04	39QZ10	0.01
16QPML-AS5V	0.05	16QPMLZ25	0.02	39QZ25	0.01
16QPML-AS10V	0.04	39QAS3V	0.01	39QPMLZ1	0.03
16QZ1	0.09	39QAS5V	0.01	39QPMLZ3	0.02
16QZ3	0.04	39QAS10V	0.01	39QPMLZ5	0.02
16QZ5	0.04	39QPMLAS-3V	0.02	39QPMLZ10	0.01
16QZ10	0.03	39QPMLAS-5V	0.02	39QPMLZ25	0.01
16QZ25	0.01	39QPMLAS-10V	0.01		

QF15 In-Line Filter

Filter Model Number Selection

How to Build a Valid Model Number for a Schroeder QF15:

BOX 1	BOX 2	BOX 3	BOX 4	BOX 5	BOX 6	BOX 7	BOX 8	BOX 9
QF15 –	–	–	–	–	–	–	–	

Example: NOTE: One option per box

BOX 1	BOX 2	BOX 3	BOX 4	BOX 5	BOX 6	BOX 7	BOX 8	BOX 9	
QF15 –	16 –	Q –	Z –	3 –	–	–	–	D5C	= QF1516QZ3D5C

BOX 1

Filter Series
QF15

BOX 2

Element Length (in)
16
39

BOX 3

Element Style
Q
QCLQF
QPML

BOX 4

Media Type
Z = Excellement® Z-Media® (synthetic)
AS = Anti-Stat Pleat media (synthetic)
W = W media (water removal)

BOX 5

Micron Rating
1 = 1 µ Z-Media®
3 = 3 µ AS and Z-Media®
5 = 5 µ AS and Z-Media®
10 = 10 µ AS and Z-Media®
25 = 25 µ Z-Media®

BOX 6

Housing Seal Material
Omit = Buna N
V = Viton®

BOX 7

Porting	
P24 = 1½" NPTF	F24 = 1½" SAE 4-bolt flange Code 61
P32 = 2" NPTF	F32 = 2" SAE 4-bolt flange Code 61
P40 = 2½" NPTF	F40 = 2½" SAE 4-bolt flange Code 61
P48 = 3" NPTF	F48 = 3" SAE 4-bolt flange Code 61
S32 = SAE-32	F24M = 1½" SAE 4-bolt flange Code 61
B24 = ISO 228 G-1½"	F32M = 2" SAE 4-bolt flange Code 61
B32 = ISO 228 G-2"	F40M = 2½" SAE 4-bolt flange Code 61
B40 = ISO 228 G-2½"	F48M = 3" SAE 4-bolt flange Code 61
B48 = ISO 228 G-3"	

BOX 8

Bypass Setting
Omit = 30 psi cracking
40 = 40 psi cracking
50 = 50 psi cracking
X = Blocked bypass

BOX 9

Dirt Alarm® Options		
	Omit =	None
Visual	DPG =	Standard differential pressure gauge
	D5 =	Visual pop-up
	D5C =	D5 in cap
	D5R =	D5 mounted opposite standard location
Visual with Thermal Lockout	D8 =	Visual w/ thermal lockout
	D8C =	D8 in cap
	D8R =	D8 mounted opposite standard location
Electrical	MS5 =	Electrical w/ 12 in. 18 gauge 4-conductor cable
	MS5LC =	Low current MS5
	MS10 =	Electrical w/ DIN connector (male end only)
	MS10LC =	Low current MS10
	MS11 =	Electrical w/ 12 ft. 4-conductor wire
	MS12 =	Electrical w/ 5 pin Brad Harrison connector (male end only)
	MS12LC =	Low current MS12
	MS16 =	Electrical w/ weather-packed sealed connector
	MS16LC =	Low current MS16
	MS17LC =	Electrical w/ 4 pin Brad Harrison male connector
Electrical with Thermal Lockout	MS5T =	MS5 (see above) w/ thermal lockout
	MS5LCT =	Low current MS5T
	MS10T =	MS10 (see above) w/ thermal lockout
	MS10LCT =	Low current MS10T
	MS12T =	MS12 (see above) w/ thermal lockout
	MS12LCT =	Low current MS12T
	MS16T =	MS16 (see above) w/ thermal lockout
	MS16LCT =	Low current MS16T
	MS17LCT =	Low current MS17T
Electrical Visual	MS13 =	Supplied w/ threaded connector & light
	MS14 =	Supplied w/ 5 pin Brad Harrison connector & light (male end)
Electrical Visual with Thermal Lockout	MS13DCT =	MS13 (see above), direct current, w/ thermal lockout
	MS13DCLCT =	Low current MS13DCT
	MS14DCT =	MS14 (see above), direct current, w/ thermal lockout
	MS14DCLCT =	Low current MS14DCT

NOTES:

Box 2. Replacement element part numbers are a combination of Boxes 2, 3, 4 and 5, plus the letter V. Example: 16QZ1V

Box 3. QCLQF are CoreCentric® coreless elements – housing includes rigid metal core. QPML are deep-pleated elements with more media and higher dirt holding capacity.

Box 4. For option W, Box 3 must equal Q.

Box 6. All elements for this filter are supplied with Viton® seals. Seal designation in Box 6 applies to housing only. Viton® is a registered trademark of DuPont Dow Elastomers.

Box 7. F24M, F32M, F40M and F48M are supplied with metric flange mounting holes.

Box 8. When X is paired with a standard filter series, a standard bushing and spring plate will be used.

Integral inlet and outlet test points are standard on all models.

Base-Ported Filter QLF15

Model No. of filter in photograph is QLF1539QZ5F4850D5.

Features and Benefits

- In-line version also available
- Element changeout from the top minimizes oil spillage
- Available with optional core assembly to accommodate coreless elements
- Offered with standard Q, QPML deep-pleated and QCLQF coreless elements in 16" and 39" lengths with Viton® seals as the standard
- Offered in pipe, SAE straight thread, and flange porting
- Integral inlet and outlet test points are standard on all models
- Various Dirt Alarm® options

500 gpm
1900 L/min
1500 psi
100 bar

Filter Housing Specifications

Flow Rating:	Up to 500 gpm (1900 L/min) for 150 SUS (32 cSt) fluids
Max. Operating Pressure:	1500 psi (100 bar)
Min. Yield Pressure:	4900 psi (340 bar), per NFPA T2.6.1
Rated Fatigue Pressure:	800 psi (55 bar), per NFPA T2.6.1-R1-2005
Temp. Range:	-20°F to 225°F (-29°C to 107°C)
Bypass Setting:	Cracking: 30 psi (2 bar) Full Flow: 55 psi (4 bar)
Porting Base & Cap:	Ductile Iron
Element Case:	Steel
Weight of QLF15-16Q:	121.0 lbs. (55.0 kg)
Weight of QLF15-39Q:	180.0 lbs. (82.0 kg)
Element Change Clearance:	16Q 12.00" (305 mm) 39Q 33.80" (859 mm)

Fluid Compatibility

Type Fluid	Appropriate Schroeder Media
Petroleum Based Fluids	All E media (cellulose), Z-Media® and ASP® media (synthetic)
High Water Content	All Z-Media® and ASP® media (synthetic)
Invert Emulsions	10 µ and 25 µ Z-Media® and 10 µ ASP® media (synthetic)
Water Glycols	3, 5, 10, and 25 µ Z-Media® and all ASP® media (synthetic)
Phosphate Esters	All Z-Media® with H (EPR) seal designation and all ASP® media (synthetic)

QLF15 Base-Ported Filter

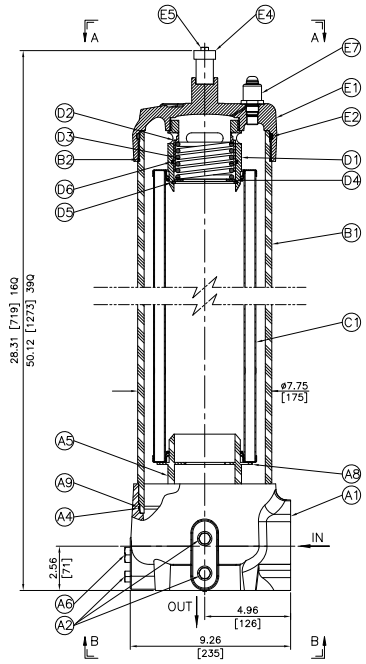

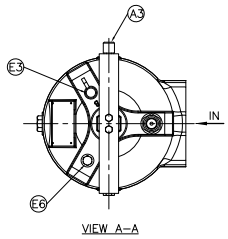

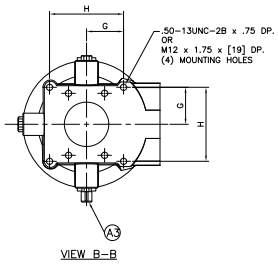

– A-LF-6232

DIMENSIONAL DATA		
PORT SIZE	DIM G	DIM H
1½" (38)	2.00 (51)	4.00 (102)
2" (51)	2.00 (51)	4.00 (102)
2½ (64)	2.00 (51)	4.00 (102)
3" (76)	2.50 (63.5)	4.00 (102)

Metric dimensions in ( ).

Element Performance Information & Dirt Holding Capacity

		Filtration Ratio Per ISO 4572/NFPA T3.10.8.8 Using automated particle counter (APC) calibrated per ISO 4402			Filtration Ratio per ISO 16889 Using APC calibrated per ISO 11171	
Element		$ß_x \geq 75$	$ß_x \geq 100$	$ß_x \geq 200$	$ß_x(c) \geq 200$	$ß_x(c) \geq 1000$
16Q	Z1/CLQFZ1/PMLZ1	<1.0	<1.0	<1.0	<4.0	4.2
	Z3/CLQFZ3/PMLZ3	<1.0	<1.0	<2.0	<4.0	4.8
	Z5/CLQFZ5/PMLZ5	2.5	3.0	4.0	4.8	6.3
	Z10/CLQFZ10/PMLZ10	7.4	8.2	10.0	8.0	10.0
	Z25/CLQFZ25/PMLZ25	18.0	20.0	22.5	19.0	24.0
39Q	Z1/CLQFZ1/PMLZ1	<1.0	<1.0	<1.0	<4.0	4.2
	Z3/CLQFZ3/PMLZ3	<1.0	<1.0	<2.0	<4.0	4.8
	Z5/CLQFZ5/PMLZ5	2.5	3.0	4.0	4.8	6.3
	Z10/CLQFZ10/PMLZ10	7.4	8.2	10.0	8.0	10.0
	Z25/CLQFZ25/PMLZ25	18.0	20.0	22.5	19.0	24.0

Element		DHC (gm)	Element	DHC (gm)	Element	DHC (gm)
16Q	Z1	276	CLQFZ1	307	PMLZ1	307
	Z3	283	CLQFZ3	315	PMLZ3	315
	Z5	351	CLQFZ5	364	PMLZ5	364
	Z10	280	CLQFZ10	306	PMLZ10	330
	Z25	254	CLQFZ25	278	PMLZ25	299
39Q	Z1	974	CLQFZ1	1259	PMLZ1	1485
	Z3	1001	CLQFZ3	1293	PMLZ3	1525
	Z5	954	CLQFZ5	1302	PMLZ5	1235
	Z10	940	CLQFZ10	1214	PMLZ10	1432
	Z25	853	CLQFZ25	1102	PMLZ25	1299

Element Collapse Rating: Q and QPML: 150 psid (10 bar), QCLQF: 100 psid (7 bar)

Flow Direction: Outside In

Element Nominal Dimensions:

16Q:	6.0" (150 mm) O.D. x 16.85" (430 mm) long
16QCLQF:	6.0" (150 mm) O.D. x 18.21" (463 mm) long
16QPML:	6.0" (150 mm) O.D. x 16.00" (405 mm) long
39Q:	6.0" (150 mm) O.D. x 38.70" (985 mm) long
39QCLQF:	6.0" (150 mm) O.D. x 40.01" (1016 mm) long
39QPML:	6.0" (150 mm) O.D. x 37.80" (960 mm) long

Pressure Drop Information

Based on Flow Rate and Viscosity

$\Delta P_{housing}$

QLF15 $\Delta P_{housing}$ for fluids with sp gr (specific gravity) = 0.86:

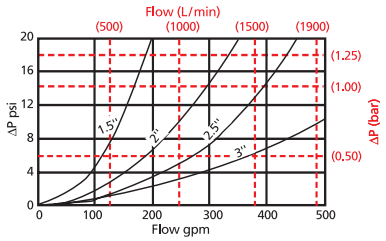

$\Delta P_{element}$

16QCLQFZ

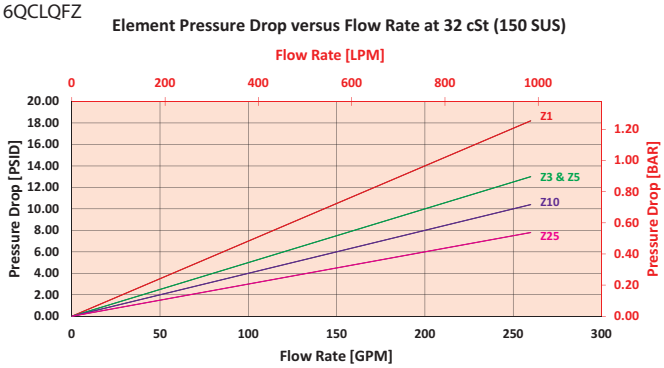

39QCLQFZ

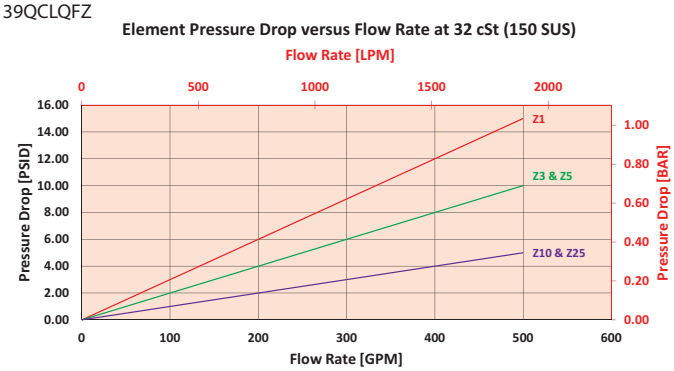

$$\Delta P_{filter} = \Delta P_{housing} + (\Delta P_{element} * V_f)$$

Exercise:

Determine ΔP_{filter} at 200 gpm (758 L/min) for QLF1516QZ3D5C using 100 SUS (21.3 cSt) fluid.

Use the housing pressure curve to determine $\Delta P_{housing}$ at 200 gpm. In this case, $\Delta P_{housing}$ is 2 psi (.14 bar) on the graph for the QLF15 housing.

Use the element pressure curve to determine $\Delta P_{element}$ at 200 gpm. In this case, $\Delta P_{element}$ is 7 psi (.48 bar) according to the graph for the 16QZ3 element.

Because the viscosity in this sample is 100 SUS (21.3 cSt), we determine the Viscosity Factor (V_f) by dividing the Operating Fluid Viscosity with the Standard Viscosity of 150 SUS (32 cSt). To best determine your Operating Fluid Viscosity, please reference the chart in Appendix D.

Finally, the overall filter pressure differential, ΔP_{filter}, is calculated by adding $\Delta P_{housing}$ with the true element pressure differential, ($\Delta P_{element}$*V_f). The $\Delta P_{element}$ from the graph has to be multiplied by the viscosity factor to get the true pressure differential across the element.

Solution:

$\Delta P_{housing}$ = 2 psi [.14 bar] | $\Delta P_{element}$ = 7 psi [.48 bar]

V_f = 100 SUS (21.3 cSt) / 150 SUS (32 cSt) = .67

ΔP_{filter} = 2 psi + (7 psi * .67) = 6.7 psi

OR

ΔP_{filter} = 14 bar + (.48 bar * .67) = .46 bar

Note:
If your element is not graphed, use the following equation:
$\Delta P_{element}$ = Flow Rate x ΔP_f. Plug this variable into the overall pressure drop equation.

Ele.	ΔP	Ele.	ΔP	Ele.	ΔP
16QAS3V	0.04	16QPMLZ1	0.08	39QZ1	0.03
16QAS5V	0.04	16QPMLZ3	0.05	39QZ3	0.01
16QAS10V	0.03	16QPMLZ5	0.05	39QZ5	0.01
16QPML-AS3V	0.05	16QPMLZ10	0.04	39QZ10	0.01
16QPML-AS5V	0.05	16QPMLZ25	0.02	39QZ25	0.01
16QPML-AS10V	0.04	39QAS3V	0.01	39QPMLZ1	0.03
16QZ1	0.09	39QAS5V	0.01	39QPMLZ3	0.02
16QZ3	0.04	39QAS10V	0.01	39QPMLZ5	0.02
16QZ5	0.04	39QPMLAS-3V	0.02	39QPMLZ10	0.01
16QZ10	0.03	39QPMLAS-5V	0.02	39QPMLZ25	0.01
16QZ25	0.01	39QPMLAS-10V	0.01		

QLF15 Base-Ported Filter

Filter Model Number Selection

How to Build a Valid Model Number for a Schroeder QF15:

BOX 1	BOX 2	BOX 3	BOX 4	BOX 5	BOX 6	BOX 7	BOX 8	BOX 9
QF15 –	–	–	–	–	–	–	–	–

Example: NOTE: One option per box

BOX 1	BOX 2	BOX 3	BOX 4	BOX 5	BOX 6	BOX 7	BOX 8	BOX 9	
QF15 –	16 –	Q –	Z –	3 –	–	–	–	D5C	= QF1516QZ3D5C

BOX 1 – Filter Series

- QLF15
- WQLF5 (Water)

BOX 2 – Element Length (in)

- 16
- 39

BOX 3 – Element Style

- Q
- QCLQF
- QPML

BOX 4 – Media Type

Z = Excellement® Z-Media® (synthetic)
AS = Anti-Stat Pleat media (synthetic)
W = W media (water removal)

Water System Element Options
QM60 = Q size 60 µ M media (reusable metal)
QM150 = Q size 150 µ M media (reusable metal)

BOX 5 – Micron Rating

1 = 1 µ Z-Media®
3 = 3 µ AS and Z-Media®
5 = 5 µ AS and Z-Media®
10 = 10 µ AS and Z-Media®
25 = 25 µ Z-Media®

BOX 6 – Housing Seal Material

Omit = Buna N
V = Viton®

BOX 7 – Porting

P24 = 1½" NPTF
P32 = 2" NPTF
P40 = 2½" NPTF
P48 = 3" NPTF

S32 = SAE-32

B24 = ISO 228 G-1½"
B32 = ISO 228 G-2
B40 = ISO 228 G-2½"
B48 = ISO 228 G-3"

F24 = 1½" SAE 4-bolt flange Code 61
F32 = 2" SAE 4-bolt flange Code 61
F40 = 2½" SAE 4-bolt flange Code 61
F48 = 3" SAE 4-bolt flange Code 61

F24M = 1½" SAE 4-bolt flange Code 61
F32M = 2" SAE 4-bolt flange Code 61
F40M = 2½" SAE 4-bolt flange Code 61
F48M = 3" SAE 4-bolt flange Code 61

BOX 8 – Bypass Setting

Omit = 30 psi cracking
40 = 40 psi cracking
50 = 50 psi cracking
X = Blocked bypass

BOX 9 – Dirt Alarm® Options

	Omit =	None
Visual	DPG =	Standard differential pressure gauge
	D5 =	Visual pop-up
	D5C =	D5 in cap
Visual with Thermal Lockout	D8 =	Visual w/ thermal lockout
	D8C =	D8 in cap
Electrical	MS5 =	Electrical w/ 12 in. 18 gauge 4-conductor cable
	MS5LC =	Low current MS5
	MS10 =	Electrical w/ DIN connector (male end only)
	MS10LC =	Low current MS10
	MS11 =	Electrical w/ 12 ft. 4-conductor wire
	MS12 =	Electrical w/ 5 pin Brad Harrison connector (male end only)
	MS12LC =	Low current MS12
	MS16 =	Electrical w/ weather-packed sealed connector
	MS16LC =	Low current MS16
	MS17LC =	Electrical w/ 4 pin Brad Harrison male connector
Electrical with Thermal Lockout	MS5T =	MS5 (see above) w/ thermal lockout
	MS5LCT =	Low current MS5T
	MS10T =	MS10 (see above) w/ thermal lockout
	MS10LCT =	Low current MS10T
	MS12T =	MS12 (see above) w/ thermal lockout
	MS12LCT =	Low current MS12T
	MS16T =	MS16 (see above) w/ thermal lockout
	MS16LCT =	Low current MS16T
	MS17LCT =	Low current MS17T
Electrical Visual	MS13 =	Supplied w/ threaded connector & light
	MS14 =	Supplied w/ 5 pin Brad Harrison connector & light (male end)
Electrical Visual with Thermal Lockout	MS13DCT =	MS13 (see above), direct current, w/ thermal lockout
	MS13DCLCT =	Low current MS13DCT
	MS14DCT =	MS14 (see above), direct current, w/ thermal lockout
	MS14DCLCT =	Low current MS14DCT

NOTES:

Box 2. Replacement element part numbers are a combination of Boxes 2, 3, 4, and 5 plus the letter V. Example: 16QZ1V

Box 3. QCLQF are CoreCentric® coreless elements – housing includes rigid metal core. QPML are deep-pleated elements with more media and higher dirt holding capacity.

Box 4. For option W, Box 3 must equal Q.

Box 6. All elements for this filter are supplied with Viton® seals. Seal designation in Box 6 applies to housing only. Viton® is a registered trademark of DuPont Dow Elastomers.

Box 7. B24, B32 and B40 are supplied with metric mounting holes. F24M, F32M, F40M and F48M are supplied with metric flange mounting holes.

Box 8: When X is paired with a standard filter series, a standard bushing and spring plate will be used.

Integral inlet and outlet test points are standard on all models.

Stainless Steel Base-Ported Filter SSQLF15

Model No. of filter in photograph is SSQLF1539QZ5F4850D5.

Features and Benefits

- In-line version also available
- Element changeout from the top minimizes oil spillage
- Offered with standard Q and QPML deep-pleated coreless elements in 16" and 39" lengths with Viton® seals as the standard
- Offered in pipe, SAE straight thread, and flange porting
- Integral inlet and outlet test points are standard on all models
- Various Dirt Alarm® options
- All stainless steel provides compatibility with water-based fluids

500 gpm
1900 L/min
1500 psi
100 bar

Filter Housing Specifications

Flow Rating:	Up to 500 gpm (1900 L/min) for 150 SUS (32 cSt) fluids
Max. Operating Pressure:	1500 psi (100 bar)
Min. Yield Pressure:	4500 psi (310 bar), per NFPA T2.6.1
Rated Fatigue Pressure:	Contact Factory
Temp. Range:	-20°F to 225°F (-29°C to 107°C)
Bypass Setting:	Cracking: 30 psi (2 bar) Full Flow: 55 psi (4 bar)
Porting Base & Cap:	Stainless Steel
Element Case:	Stainless Steel
Weight of SSQLF15-16Q:	163.0 lbs. (74.0 kg)
Weight of SSQLF15-39Q:	240.0 lbs. (109.0 kg)
Element Change Clearance:	16Q 12.00" (305 mm) 39Q 33.80" (859 mm)

Fluid Compatibility

Type Fluid	Appropriate Schroeder Media
Petroleum Based Fluids	All E media (cellulose), Z-Media® and ASP® media (synthetic)
High Water Content	All Z-Media® and ASP® media (synthetic)
Invert Emulsions	10 and 25 µ Z-Media® and 10 µ ASP® media (synthetic)
Water Glycols	3, 5, 10 and 25 µ Z-Media® and all ASP® media (synthetic)
Phosphate Esters	All Z-Media® (synthetic) with H (EPR) seal designation and all ASP® media (synthetic)

SSQLF15 Stainless Steel Base-Ported Filter

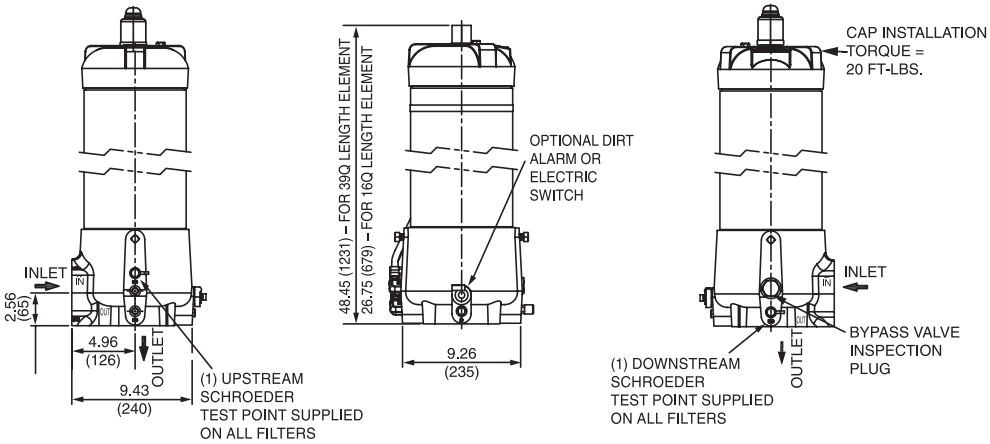

DIMENSIONAL DATA		
PORT SIZE	DIM A	DIM B
1½" (38)	2.00 (51)	4.00 (102)
2" (51)	2.00 (51)	4.00 (102)
2½" (64)	2.00 (51)	4.00 (102)
3" (76)	2.00 (51)	4.00 (102)
3" (4 bolt port only)	2.50 (64)	5.00 (127)

Metric dimensions in ( ).

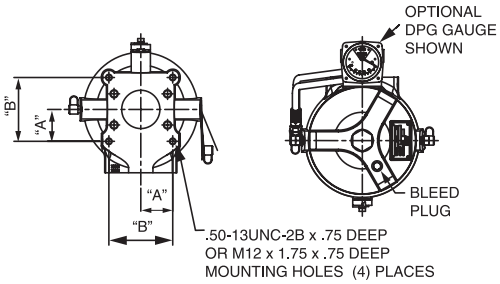

Element Performance Information & Dirt Holding Capacity

	Element	Filtration Ratio Per ISO 4572/NFPA T3.10.8.8 Using automated particle counter (APC) calibrated per ISO 4402			Filtration Ratio per ISO 16889 Using APC calibrated per ISO 11171	
		$ß_x \geq 75$	$ß_x \geq 100$	$ß_x \geq 200$	$ß_x(c) \geq 200$	$ß_x(c) \geq 1000$
16Q	Z1/CLQFZ1/PMLZ1	<1.0	<1.0	<1.0	<4.0	4.2
	Z3/CLQFZ3/PMLZ3	<1.0	<1.0	<2.0	<4.0	4.8
	Z5/CLQFZ5/PMLZ5	2.5	3.0	4.0	4.8	6.3
	Z10/CLQFZ10/PMLZ10	7.4	8.2	10.0	8.0	10.0
	Z25/CLQFZ25/PMLZ25	18.0	20.0	22.5	19.0	24.0
39Q	Z1/CLQFZ1/PMLZ1	<1.0	<1.0	<1.0	<4.0	4.2
	Z3/CLQFZ3/PMLZ3	<1.0	<1.0	<2.0	<4.0	4.8
	Z5/CLQFZ5/PMLZ5	2.5	3.0	4.0	4.8	6.3
	Z10/CLQFZ10/PMLZ10	7.4	8.2	10.0	8.0	10.0
	Z25/CLQFZ25/PMLZ25	18.0	20.0	22.5	19.0	24.0

	Element	DHC (gm)	Element	DHC (gm)
16Q	Z1	276	PMLZ1	307
	Z3	283	PMLZ3	315
	Z5	351	PMLZ5	364
	Z10	280	PMLZ10	330
	Z25	254	PMLZ25	299
39Q	Z1	974	PMLZ1	1485
	Z3	1001	PMLZ3	1525
	Z5	954	PMLZ5	1235
	Z10	940	PMLZ10	1432
	Z25	853	PMLZ25	1299

Element Collapse Rating: Q and QPML: 150 psid (10 bar)

Flow Direction: Outside In

Element Nominal Dimensions:
- 16Q: 6.0" (150 mm) O.D. x 16.85" (430 mm) long
- 16QPML: 6.0" (150 mm) O.D. x 16.00" (405 mm) long
- 39Q: 6.0" (150 mm) O.D. x 38.70" (985 mm) long
- 39QPML: 6.0" (150 mm) O.D. x 37.80" (960 mm) long

Pressure Drop Information

Based on Flow Rate and Viscosity

$\Delta P_{housing}$

SSQLF15 $\Delta P_{housing}$ for fluids with sp gr (specific gravity) = 0.86:

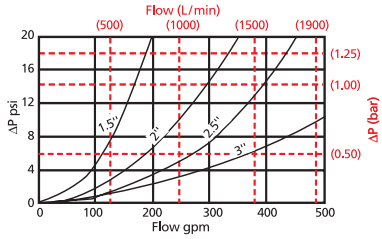

$\Delta P_{element}$

39QZ

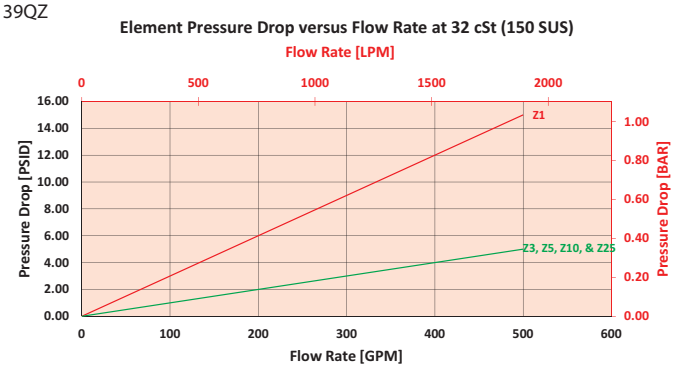

39QPMLZ

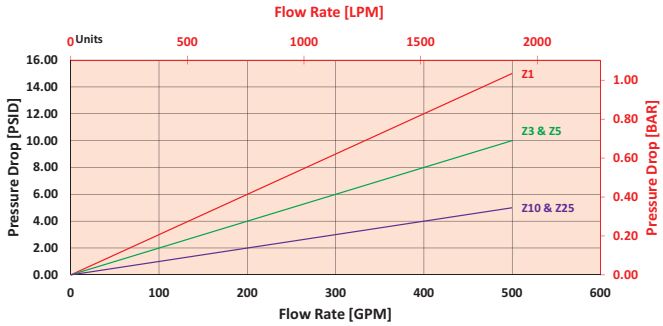

$$\Delta P_{filter} = \Delta P_{housing} + (\Delta P_{element} * V_f)$$

Exercise:

Determine ΔP_{filter} at 200 gpm (758 L/min) for SSQLF1516QZ3P48D9C using 100 SUS (21.3 cSt) fluid.

Use the housing pressure curve to determine $\Delta P_{housing}$ at 200 gpm. In this case, $\Delta P_{housing}$ is 2 psi (.14 bar) on the graph for the SSQLF housing.

Use the element pressure curve to determine $\Delta P_{element}$ at 200 gpm. In this case, $\Delta P_{element}$ is 7 psi (.48 bar) according to the graph for the 16QZ3 element.

Because the viscosity in this sample is 100 SUS (21.3 cSt), we determine the Viscosity Factor (V_f) by dividing the Operating Fluid Viscosity with the Standard Viscosity of 150 SUS (32 cSt). To best determine your Operating Fluid Viscosity, please reference the chart in Appendix D.

Finally, the overall filter pressure differential, ΔP_{filter}, is calculated by adding $\Delta P_{housing}$ with the true element pressure differential, ($\Delta P_{element}$*V_f). The $\Delta P_{element}$ from the graph has to be multiplied by the viscosity factor to get the true pressure differential across the element.

Solution:

$\Delta P_{housing}$ = 2 psi [.14 bar] | $\Delta P_{element}$ = 7 psi [.48 bar]

V_f = 100 SUS (21.3 cSt) / 150 SUS (32 cSt) = .67

ΔP_{filter} = 2 psi + (7 psi * .67) = 6.7 psi

OR

ΔP_{filter} = .14 bar + (.48 bar * .67) = .46 bar

Note:
If your element is not graphed, use the following equation:
$\Delta P_{element}$ = Flow Rate x ΔP_f. Plug this variable into the overall pressure drop equation.

Ele.	ΔP	Ele.	ΔP
16QAS3V	0.04	16QPMLZ1	0.08
16QAS5V	0.04	16QPMLZ3	0.05
16QAS10V	0.03	16QPMLZ5	0.05
16QPMLAS3V	0.05	16QPMLZ10	0.04
16QPMLAS5V	0.05	16QPMLZ25	0.02
16QPMLAS10V	0.04	39QAS3V	0.01
16QZ1	0.09	39QAS5V	0.01
16QZ3	0.04	39QAS10V	0.01
16QZ5	0.04	39QPMLAS3V	0.02
16QZ10	0.03	39QPMLAS5V	0.02
16QZ25	0.01	39QPMLAS10V	0.01

SSQLF15 Stainless Steel Base-Ported Filter

Filter Model Number Selection

How to Build a Valid Model Number for a Schroeder SSQLF15:

BOX 1		BOX 2		BOX 3		BOX 4		BOX 5		BOX 6		BOX 7		BOX 8		BOX 9
SSQLF15	–		–		–		–		–		–		–		–	

Example: NOTE: One option per box

BOX 1		BOX 2		BOX 3		BOX 4		BOX 5		BOX 6		BOX 7		BOX 8		BOX 9	
SSQLF15	–	16	–	Q	–	Z	–	3	–		–	P48	–		–	D9C	=SSQLF1516QZ3P48D9C

BOX 1

Filter Series
SSQLF15

BOX 2

Element Length (in)
16
39

BOX 3

Element Style
Q
QCLQF
QPML

BOX 4

Media Type
Z = Excellement® Z-Media® (synthetic)
AS = Anti-Stat Pleat media (synthetic)
M = M media (reusable metal)
W = W media (water removal)
150PSV = 150 µ nominal synthetic media with plastic outer wrap

BOX 5

Micron Rating
1 = 1 µ Z-Media®
3 = 3 µ AS and Z-Media®
5 = 5 µ AS and Z-Media®
10 = 10 µ AS and Z-Media®
25 = 25 µ M and Z-Media®
60 = 60 µ M media
150 = 150 µ M-media or 150 PSV
W = water removal media

BOX 6

Housing Seal Material
Omit = Buna N
H = EPR
V = Viton®

BOX 7

Porting
P24 = 1½" NPTF
P32 = 2" NPTF
P40 = 2½" NPTF
P48 = 3" NPTF
S32 = SAE-32
B24 = ISO 228 G-1½"
B32 = ISO 228 G-2"
B40 = ISO 228 G-2½"
B48 = ISO 228 G-3"
F24 = 1½" SAE 4-bolt flange Code 61
F32 = 2" SAE 4-bolt flange Code 61
F40 = 2½" SAE 4-bolt flange Code 61
F48 = 3" SAE 4-bolt flange Code 61
F24M = 1½" SAE 4-bolt flange Code 61
F32M = 2" SAE 4-bolt flange Code 61
F40M = 2½" SAE 4-bolt flange Code 61
F48M = 3" SAE 4-bolt flange Code 61

BOX 8

Bypass Setting
Omit = 30 psi cracking
50 = 50 psi cracking
X = Blocked bypass

BOX 9

Dirt Alarm® Options		
		Omit = None
Visual		DPG = Standard differential pressure gauge D9 = Visual pop-up in base (stainless steel) D9C = D9 in cap (stainless steel)

NOTES:

Box 2. Replacement element part numbers are a combination of Boxes 2, 3, 4 and 5 plus the letter V. Example: 16QZ1V

Box 4. For options W, 150PSV, M25, M60, and M150, Box 3 must equal Q.

Box 6. All elements for this filter are supplied with Viton® seals. Seal designation in Box 6 applies to housing only. Viton® is a registered trademark of DuPont Dow Elastomers.

Box 7. B24, B32 and B40 are supplied with metric mounting holes. F24M, F32M, F40M and F48M are supplied with metric flange mounting holes.

Box 8: When X is paired with a standard filter series, a standard bushing and spring plate will be used.

Integral inlet and outlet test points are standard on all models.